Directions for use of Parts Catalogue

1. Applicable model of machines

All component and option parts used for NP60 rice transplanters are listed in this parts catalogue.

1) MODEL TYPE

G····· 2-CYLINDER GASOLINE ENGINE OF WATER-COOLED

D····· 3-CYLINDER DIESEL ENGINE

L····· ROTOR

F····· FERTILIZER

2) AREA CODE

E16···· KOREA

2. Details of the Structure Table of Model

*** **Structure Table of Model** ***

MODEL	SF310 FHUXWE4	SF370 FHUXWE6									
FIG.											
1	***	***									
2	*	*									
3		***									
4	***										
5		***									
6	***										
7	***	***									
8											

①

③

②

① FIG. : Parts structure of the machine is classified by its functions. FIG. number corresponds to the number written at the top of the parts illustration.

② Model : Shows the name of the model.

③ Structure Table : Shows which functions are originally equipped or can be equipped afterwards for each machines

`＊´ Standard Parts

`T´ Optional Parts

`R´ Repair Parts (parts which can only be used for repairs)

3. Explanation for head paragraph

KEY	PART CODE	DESCRIPTION	SPC	TYPE OF MODEL						ITC	COL	GRP	REMARKS
				SSM48M	SSM48F	SSM48G	SRM48M	SRM48F	SRM48G				
1	8595-211-001-20	CASE/UPPER	*	1 -229									
1A	8657-201-081-00	CASE/UPPER	*	1 230-			1						
2	8595-211-002-10	CASE/LOWER	*	1			1						
3	V523-100-801-80	PIN	*	2			2						
4	V211-260-803-00	BOLT, SEMS	*	6			6						
			*	2 -229									
			*	2 230-			2						
				2			2						
				1			1						

① ② ③ ④ ⑤ ⑥ ⑦ ⑧ ⑨

① KEY shows the location of parts diagramed in the illustration.

② Parts numbers begin with `V´ and `W´ are standard parts of the market.

③ `LH´ and `RH´ on the parts name are described against the moving direction of the machine or are described on the condition how to install parts on the machines.

④ SPC : The following symbol classifies parts to be used for machines.

`＊´ means standard parts.

`T´ shows that the parts can be installed as optional parts.

`R´ shows that the parts can be used as applicable parts to replace originally equipped parts.

⑤ Upper column : QTY shows the number of parts to be used for one unit of machine.

`M´ is indicated for parts supplied by a meter long.

` l ´ is indicated for parts supplied by liter.

`AR´ is indicated for parts need to be adjusted or regulated.

Lower column : serial number

—229 means serial number up to 229.

230— means serial number 230 and after.

⑥ ITC : Interchangeability

`1´…OLD ← NEW

New parts can be used in place of the old parts.

`2´…OLD → NEW

Old parts can be used in place of the new parts.

`3´…OLD →← NEW

Old parts and new parts can not be replaced each other.

⑦ COL : Color code

Color is signified with color code number for colored parts.

Please see the color list shown in the next page.

⑧ GRP : Parts shown in this column can be replaced by SET parts.

Example : Parts marked Ⓐ can be replaced by parts marked Ⓑ, and Ⓓ for Ⓒ, so the rest follow in the same alphabetical order.

⑨ Remarks

＊Other maker's part code number is shown in this column.

＊When Fig. No. is shown in the Remark column of SET parts or ASSY parts, each of their component parts are listed in said Fig. No.

4. Color :

The following colors are used color parts.

COLOR CODE	COLOR	SPRAY TYPE PARTS CODE	PAINTS 4K DRUM PARTS CODE	PAINTS 16K DRUM PARTS CODE
4 L	NEO BLUE	1300-985-001-20	1300-985-003-00	1300-985-004-00
5 N	GRAY NO.1	1300-983-001-20	1300-983-003-00	――――
6 G	SUMMER WHITE	1300-958-001-20	1300-958-003-00	1300-958-004-00
7 F	MIRROR BLACK	1300-954-001-20	1300-954-003-00	1300-954-004-00

NOTE : Color code is signified only for the parts assigned by the maker as color arts.

Serial Numbers :

For chassies&engines serial number is shown on the LABEL.

Please see

Chassies

engines

5. Parts Order

1) When you order parts, please make sure of correct numbers.

2) When substitute parts is available, the part number ordered will be automatically turned to a new part number.

3) Please be sure to use “ISEKI GENUINE PARTS”.
Any other similar parts other than ISEKI parts when used may cause a trouble that makes us unable to repair or guarantee the warrant.

*** Structure Table of Model ***

MODEL / FIG.	NP60E116	DDDDLLLLEEFRRE116	GGGGLLLLEFRRE116									
1			****									
2	****											
3			**									
4	****											
5			* *									
6			****									
7			* *									
8	****											
9			* *									
10	****											
11			* *									
12			****									
13	****											
14			****									
15	****											
16	****		****									
17			****									
18	****											
19			****									
20	****											
21			****									
22	****											
23	****		****									
24			****									
25	****											
26			****									
27	****											
28			****									
29	****											
30			****									
31	****											
32	****		****									
33			****									
34	****											
35			****									
36	****											
37	****		****									
38	****		****									
39	****		****									
40	****											
41			****									
42	****		****									
43	****		****									
44	****		****									
45			****									

*** Structure Table of Model ***

MODEL / FIG.	NP60E116	DDDDLLLLEEFEE66116	GGGGLLLLEFREF61166									
46	****											
47			****									
48	****											
49	****		****									
50	****											
51			****									
52			**									
53	****		****									
54	****											
55			****									
56	****		****									
57			* *									
58	* *											
59			* *									
60	* *											
61	****		****									
62	****		****									
63	****		****									
64	****		****									
65	****		****									
66	****		****									
67			****									
68	****											
69	****		****									
70			****									
71	****											
72			****									
73	****											
74	****		****									
75	****		****									
76	**		**									
77	****		****									
78	****		****									
79	****		****									
80			****									
81	****											
82	****											
83	*		* *									
84	* *											
85			****									
86	****											
87	*		*									
88	*		*									
89	**		**									
90			**									

*** Structure Table of Model ***

FIG. \ MODEL	NP60E16	DLE16	DLFE16	DLRE16	DLRFE16	GLE16	GLFE16	GLRE16	GLRFE16										
91				*	*														
92						*	*												
93		*	*																
94		*	*			*	*												
95		*	*	*	*	*	*	*	*										
96		*	*	*	*	*	*	*	*										
97		*	*	*	*	*	*	*	*										
98		*	*	*	*	*	*	*	*										
99		*	*																
100						*	*												
101								*	*										
102				*	*														
103							*		*										
104		*		*															
105			*		*														
106						*		*											
107		*	*	*	*	*	*	*	*										
108						*	*	*	*										
109		*	*	*	*														
110		*	*	*	*	*	*	*	*										
111		*	*	*	*	*	*	*	*										
112		*	*	*	*	*	*	*	*										
113		*	*	*	*	*	*	*	*										
114		*	*	*	*	*	*	*	*										
115		*	*	*	*	*	*	*	*										
116		*	*	*	*	*	*	*	*										
117		*	*	*	*	*	*	*	*										
118		*	*	*	*	*	*	*	*										
119		*	*	*	*	*	*	*	*										
120		*	*	*	*	*	*	*	*										
121		*	*	*	*														
122						*	*	*	*										
123		*	*	*	*	*	*	*	*										
124		*	*	*	*	*	*	*	*										
125		*	*	*	*	*	*	*	*										
126		*	*	*	*	*	*	*	*										
127		*	*	*	*	*	*	*	*										
128		*	*	*	*	*	*	*	*										
129		*	*	*	*	*	*	*	*										
130							*		*										
131			*		*														
132			*		*		*		*										
133			*		*		*		*										
134			*		*		*		*										
135			*		*		*		*										

*** Structure Table of Model ***

MODEL / FIG.	NP60E16	DLEF116	DLEF116	DLRE16	DLRE16	GLE16	GLEF116	GLRE16	GLRE16								
136		*			*		*		*								
137		*			*		*		*								
138	*	*	*	*	*	*	*	*	*								
139	*	*	*	*	*	*	*	*	*								
140	*	*	*	*	*	*	*	*	*								
141	*	*				*	*										
142	*	*	*	*	*	*	*	*	*								
143	*	*	*	*	*	*	*	*	*								
144	*	*	*	*	*	*	*	*	*								
145	*	*				*	*										
146	*	*	*	*	*	*	*	*	*								
147	*	*	*	*	*	*	*	*	*								
148	*	*	*	*	*	*	*	*	*								
149	*	*	*	*	*	*	*	*	*								
150	*	*	*	*	*	*	*	*	*								
151	*	*	*	*	*	*	*	*	*								
152	*	*	*	*	*	*	*	*	*								
153	*	*	*	*	*	*	*	*	*								
154		*					*										
155	*	*	*	*	*	*	*	*	*								
156	*	*	*	*	*	*	*	*	*								
157	*	*	*	*	*	*	*	*	*								
158	*	*															
159						*	*										
160								*	*								
161				*	*												
162						*	*										
163	*	*															
164								*	*								
165				*	*												
166	*	*	*	*	*	*	*	*	*								
167		*					*										
168					*				*								
169		*			*		*		*								
170						*	*	*	*								
171	*	*	*	*													
172						*	*	*	*								
173	*	*	*	*													
174	*	*	*	*	*	*	*	*	*								
175	*	*	*	*	*	*	*	*	*								
176						*	*	*	*								
177		*			*		*		*								
178		*			*		*		*								
179	*	*	*	*													

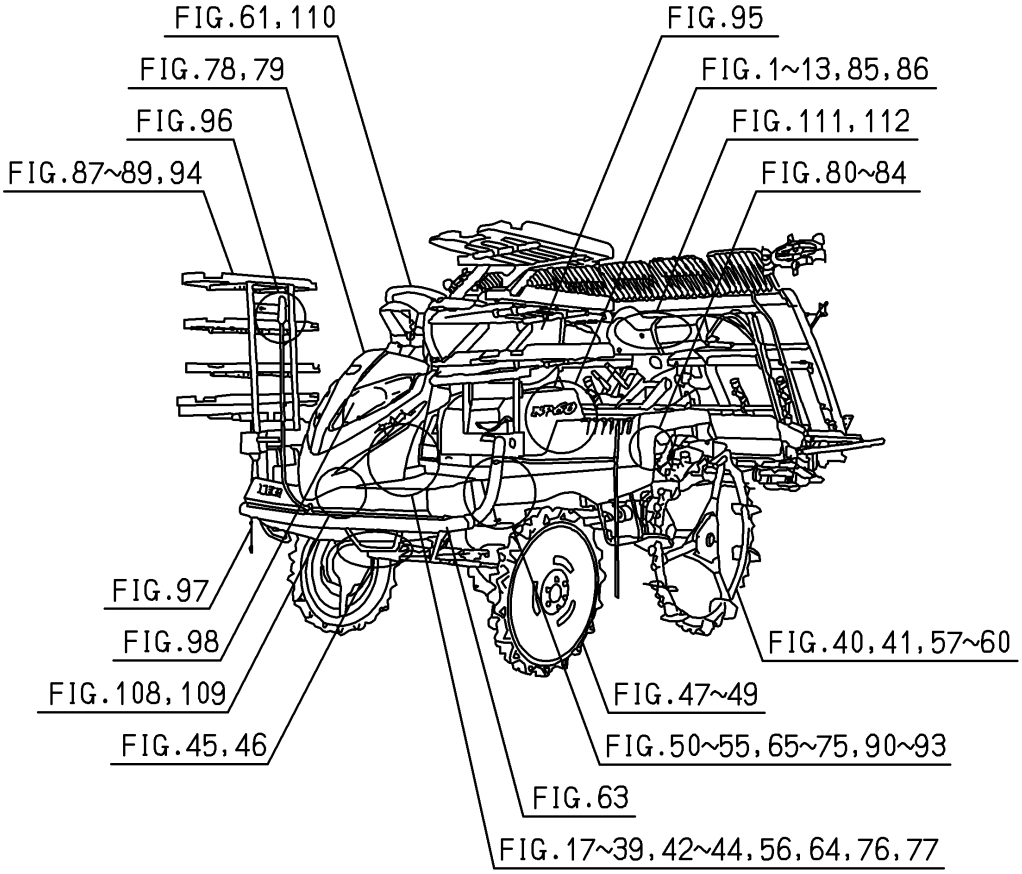
FIG.61,110
FIG.78,79
FIG.96
FIG.87~89,94
FIG.95
FIG.1~13,85,86
FIG.111,112
FIG.80~84
FIG.97
FIG.98
FIG.108,109
FIG.45,46
FIG.40,41,57~60
FIG.47~49
FIG.50~55,65~75,90~93
FIG.63
FIG.17~39,42~44,56,64,76,77

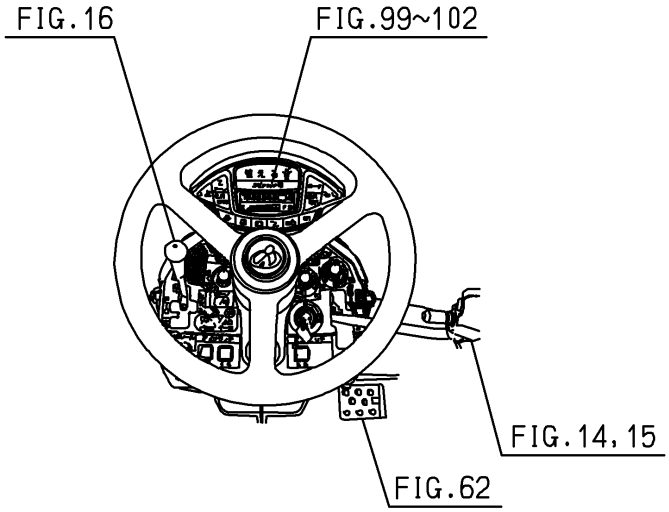
FIG.16
FIG.99~102
FIG.14,15
FIG.62

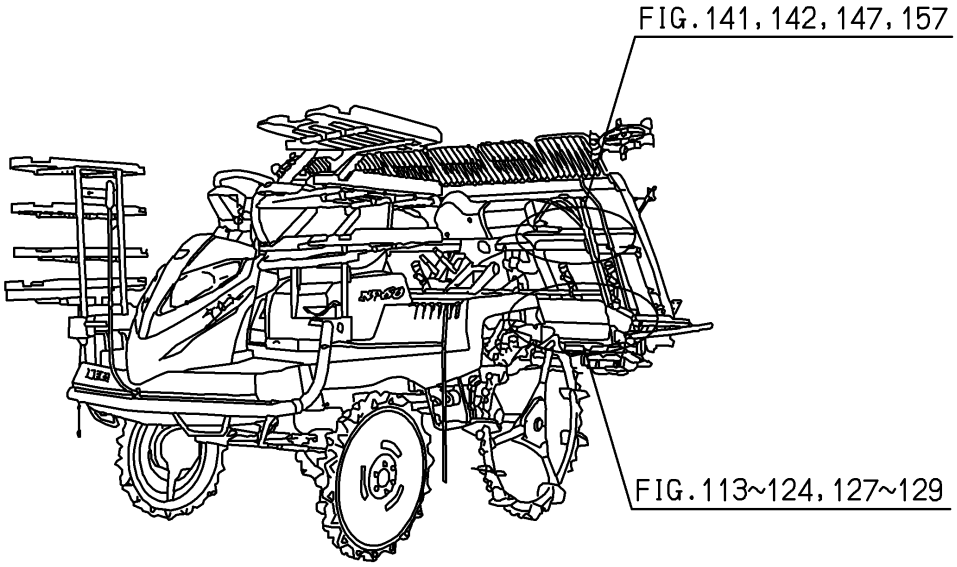
FIG.141,142,147,157
FIG.113~124,127~129

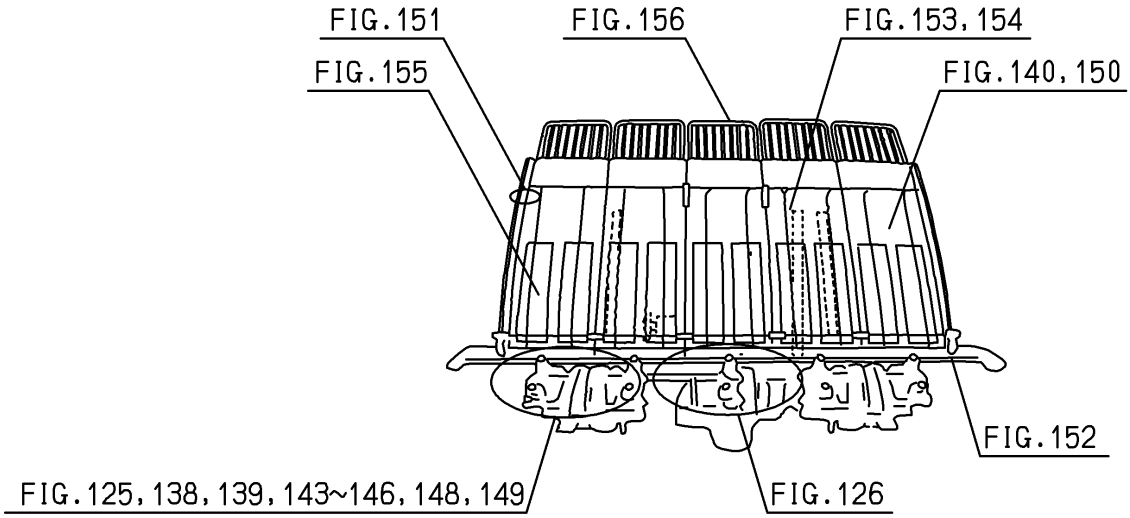
FIG.151
FIG.156
FIG.153,154
FIG.155
FIG.140,150
FIG.152
FIG.125,138,139,143~146,148,149
FIG.126

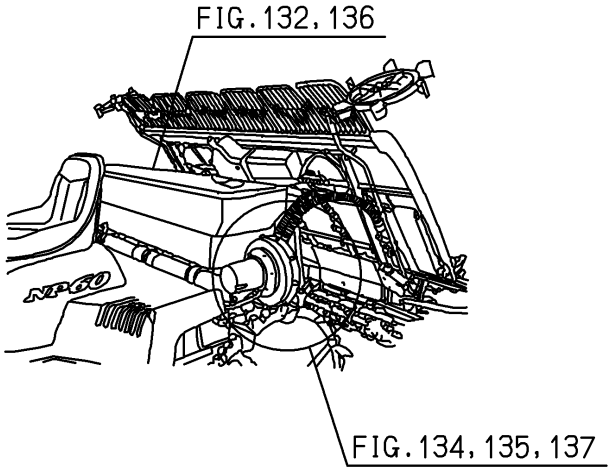
FIG.132,136
FIG.134,135,137

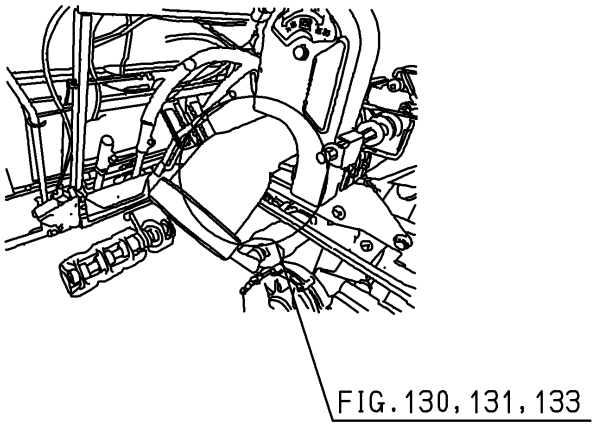
FIG.130,131,133

Contents

NP60G E16

ENGINE(FD620D-MB02,NB02,PB02)

CYLINDER/CRANKCASE····· Fig. 1
PISTON/CRANKSHAFT····· Fig. 2
VALVE/CAMSHAFT····· Fig. 3
LUBRICATION-EQUIPMENT····· Fig. 4
COOLING-EQUIPMENT····· Fig. 5
ELECTRIC-EQUIPMENT····· Fig. 6
CONTROL-EQUIPMENT····· Fig. 7
CARBURETOR····· Fig. 8
AIR-FILTER/MUFFLER····· Fig. 9
FUEL-TANK/FUEL-VALVE····· Fig. 10
STARTER····· Fig. 11

Contents

NP60D E16

ENGINE(E3112-UP03)

CYLINDER HEAD ..... Fig. 1
CYLINDER HEAD COVER ..... Fig. 2
INLET MANIFOLD ..... Fig. 3
EXHAUST MANIFOLD ..... Fig. 4
CYLINDER BLOCK ..... Fig. 5
BEARING/UNDER SIZE (OPTION) ..... Fig. 6
OIL PAN ..... Fig. 7
REAR PLATE ..... Fig. 8
TIMING GEAR CASE ..... Fig. 9
HANGER ..... Fig. 10
HANGER ..... Fig. 11
VALVE ..... Fig. 12
CAM SHAFT ..... Fig. 13
PISTON ..... Fig. 14
PISTON/OVER SIZE (OPTION) ..... Fig. 15
CRANK SHAFT ..... Fig. 16
OIL PUMP ..... Fig. 17
WATER PUMP ..... Fig. 18
WATER PUMP ..... Fig. 19
COOLING FAN ..... Fig. 20
INJECTION NOZZLE ..... Fig. 21
INJECTION PUMP ..... Fig. 22
FUEL PIPE ..... Fig. 23
ADAPTER ..... Fig. 24

ELECTRIC (1)····· Fig. 25
ELECTRIC (2)····· Fig. 26
REPAIR PARTS(OPTION)·····Fig. 27
COMPONENT PARTS
FOR 6215-300-036-10 ON Fig.021·····Fig. 28
COMPONENT PARTS
FOR 6215-600-156-20 ON Fig.022·····Fig. 29
COMPONENT PARTS
FOR 6281-100-014-00 ON Fig.025·····Fig. 30

Contents

CHASSIS

MUFFLER SYSTEM(G TYPE)····· Fig. 1
MUFFLER SYSTEM(D TYPE)····· Fig. 2
RADIATOR SYSTEM(G TYPE EXCEPT R)(1/2)(2/2)····· Fig. 3
RADIATOR&CLEANER(AIR)SYSTEM(D TYPE)····· Fig. 4
ALTERNATOR SYSTEM(GF TYPE)····· Fig. 5
BRACKET(ENGINE)SYSTEM(G TYPE)····· Fig. 6
PULLEY(ENGINE)SYSTEM(GF TYPE)····· Fig. 7
PULLEY(ENGINE)SYSTEM(D TYPE)····· Fig. 8
PULLEY(ENGINE)SYSTEM(G TYPE EXCEPT F)····· Fig. 9
TENSION(BELT/ENGINE)SYSTEM(D TYPE)····· Fig. 10
PIVOT(TENSION/BELT)SYSTEM
(G TYPE EXCEPT F)····· Fig. 11
TANK(FUEL)SYSTEM(G TYPE)····· Fig. 12
TANK(FUEL)SYSTEM(D TYPE)····· Fig. 13
LEVER(MAIN)SYSTEM(G TYPE)····· Fig. 14
LEVER(MAIN)SYSTEM(D TYPE)····· Fig. 15
LEVER(SUB)SYSTEM····· Fig. 16
HST SYSTEM(G TYPE)····· Fig. 17
HST SYSTEM(D TYPE)····· Fig. 18
LINK(HST)SYSTEM(G TYPE)(1/2)(2/2)····· Fig. 19
LINK(HST)SYSTEM(D BTYPE)(1/2)(2/2)····· Fig. 20
PEDAL(ACCELERATOR)SYSTEM(G TYPE)····· Fig. 21
PEDAL(ACCELERATOR)SYSTEM(D TYPE)····· Fig. 22
CASE(TRANSMISSION)SYSTEM····· Fig. 23
SHAFT(INPUT)SYSTEM(G TYPE)····· Fig. 24
SHAFT(INPUT)SYSTEM(D TYPE)····· Fig. 25
SHAFT(COUNTER)SYSTEM(G TYPE)····· Fig. 26

SHAFT(COUNTER)SYSTEM(D TYPE)····· Fig. 27
SHAFT(CHANGE)SYSTEM(G TYPE)····· Fig. 28
SHAFT(CHANGE)SYSTEM(D TYPE)····· Fig. 29
SHAFT(OUTPUT)SYSTEM(G TYPE)····· Fig. 30
SHAFT(OUTPUT)SYSTEM(D TYPE)····· Fig. 31
SHAFT(DRIVE/FRONT)SYSTEM····· Fig. 32
SHAFT(DRIVE/PLANTING)SYSTEM(G TYPE)····· Fig. 33
SHAFT(DRIVE/PLANTING)SYSTEM(D TYPE)····· Fig. 34
SHAFT(PLANTING INTERVAL,PLANTING/
OUTPUT)SYSTEM(G TYPE)····· Fig. 35
SHAFT(PLANTING INTERVAL,
PLANTING/OUTPUT)SYSTEM(D TYPE)····· Fig. 36
SHIFT(DRIVE,PLANTING INTERVAL)SYSTEM····· Fig. 37
LEVER(PLANTING INTERVAL)SYSTEM····· Fig. 38
PEDAL(CLUTCH/DIFFERENTIAL GEAR)SYSTEM····· Fig. 39
WHEEL(REAR/950)SYSTEM(D TYPE)····· Fig. 40
WHEEL(REAR/900)SYSTEM(G TYPE)····· Fig. 41
SHAFT(STEERING)SYSTEM····· Fig. 42
ROD(TIE)SYSTEM····· Fig. 43
TURN SYSTEM····· Fig. 44
CASE(GEAR/FINAL)SYSTEM(G TYPE)(1/2)(2/2)····· Fig. 45
CASE(GEAR/FINAL)SYSTEM(D TYPE)(1/2)(2/2)····· Fig. 46
WHEEL(FRONT/650)SYSTEM(G TYPE)····· Fig. 47
WHEEL(FRONT/650)SYSTEM(D TYPE)····· Fig. 48
CAP(WHEEL/FRONT)SYSTEM····· Fig. 49
FRAME(MAIN)SYSTEM(D TYPE)····· Fig. 50
FRAME(MAIN)SYSTEM(G TYPE)····· Fig. 51
SHAFT(DRIVE/REAR)SYSTEM
(G TYPE EXCEPT R)(NO.1-630)····· Fig. 52
SHAFT(DRIVE/REAR)SYSTEM
(G TYPE EXCEPT R-NO.631-)····· Fig. 53
SHAFT(PLANTING)SYSTEM(D TYPE)····· Fig. 54
SHAFT(PLANTING)SYSTEM(G TYPE)····· Fig. 55

SHAFT(BRAKE)SYSTEM ..... Fig. 56
CASE(REAR)SYSTEM(GF TYPE)(1/2)(2/2) ..... Fig. 57
CASE(REAR)SYSTEM(DF TYPE)(1/2)(2/2) ..... Fig. 58
CASE(REAR)SYSTEM(GF TYPE)(1/2)(2/2) ..... Fig. 59
CASE(REAR)SYSTEM(DF TYPE)(1/2)(2/2) ..... Fig. 60
WHEEL(STEERING)SYSTEM ..... Fig. 61
CASE(REAR)SYSTEM ..... Fig. 62
BUMPER SYSTEM ..... Fig. 63
PUMP SYSTEM ..... Fig. 64
CYLINDER SYSTEM ..... Fig. 65
PIPING SYSTEM ..... Fig. 66
ARM(CYLINDER)SYSTEM(G TYPE) ..... Fig. 67
ARM(CYLINDER)SYSTEM(D TYPE) ..... Fig. 68
ACCUMULATOR SYSTEM ..... Fig. 69
LINK(LOWER)SYSTEM(G TYPE) ..... Fig. 70
LINK(LOWER)SYSTEM(D TYPE) ..... Fig. 71
LINK(UPPER)SYSTEM(G TYPE) ..... Fig. 72
LINK(UPPER)SYSTEM(D TYPE) ..... Fig. 73
CLUTCH(PLANTING)SYSTEM ..... Fig. 74
VALVE SYSTEM ..... Fig. 75
CONTROLLER(STEERING)SYSTEM
(EXCEPT R TYPE)(NO.1-630) ..... Fig. 76
CONTROLLER(STEERING)SYSTEM
(EXCEPT R TYPE-NO.631-) ..... Fig. 77
HOOD SYSTEM ..... Fig. 78
HOOD(REAR)SYSTEM ..... Fig. 79
STEP(MAIN)SYSTEM(G TYPE) ..... Fig. 80
STEP(MAIN)SYSTEM(D TYPE) ..... Fig. 81
STEP(SIDE)SYSTEM(D TYPE) ..... Fig. 82
STEP(REAR)SYSTEM(EXCEPT F,DR TYPE)
(D TYPE-NO.1-630) ..... Fig. 83
STEP(REAR)SYSTEM(D TYPE EXCEPT F)
(EXCEPT R TYPE-NO.631-) ..... Fig. 84

COVER(ENGINE)SYSTEM(G TYPE)····· Fig. 85
COVER(ENGINE)SYSTEM(D TYPE)····· Fig. 86
FRAME(SEEDLING/SUB)SYSTEM(RF TYPE)(1/2)(2/2)····· Fig. 87
FRAME(SEEDLING/SUB)SYSTEM
(R TYPE EXCEPT F)(1/2)(2/2)····· Fig. 88
FRAME(SEEDLING/SUB)SYSTEM
(EXCEPT R TYPE)····· Fig. 89
STAY(FRAME/SEEDLING/SUB)SYSTEM
(GR TYPE)····· Fig. 90
STAY(FRAME/SEEDLING/SUB)SYSTEM
(DR TYPE)····· Fig. 91
STAY(FRAME/SEEDLING/SUB)SYSTEM
(G TYPE EXCEPT R)····· Fig. 92
STAY(FRAME/SEEDLING/SUB)SYSTEM
(D TYPE EXCEPT R)····· Fig. 93
MIRROR SYSTEM(EXCEPT R TYPE)····· Fig. 94
SEAT SYSTEM····· Fig. 95
MARKER(CENTER)SYSTEM····· Fig. 96
MARKER(SIDE)SYSTEM····· Fig. 97
LIGHT(HEAD)SYSTEM····· Fig. 98
PANEL(INSTRUMENT)SYSTEM
(D TYPE EXCEPT R)(1/2)(2/2)····· Fig. 99
PANEL(INSTRUMENT)SYSTEM
(G TYPE EXCEPT R)(1/2)(2/2)····· Fig.100
PANEL(INSTRUMENT)SYSTEM(GR TYPE)(1/2)(2/2)····· Fig.101
PANEL(INSTRUMENT)SYSTEM(DR TYPE)(1/2)(2/2)····· Fig.102
HARNESS(TRAVELING SECTION)SYSTEM
(GF TYPE)(1/2)(2/2)····· Fig.103
HARNESS(TRAVELING SECTION)SYSTEM
(D TYPE EXCEPT F)····· Fig.104
HARNESS(TRAVELING SECTION)SYSTEM
(DF TYPE)(1/2)(2/2)····· Fig.105
HARNESS(TRAVELING SECTION)SYSTEM
(G TYPE EXCEPT F)····· Fig.106

HARNESS(PLANTING SECTION)SYSTEM Fig.107
BATTERY SYSTEM(G TYPE) Fig.108
BATTERY SYSTEM(D TYPE) Fig.109
CONTROLLER(FRONT)SYSTEM Fig.110
CONTROLLER(REAR)SYSTEM Fig.111
CLUTCH(PLANTING)SYSTEM Fig.112
DRIVE(ROTOR)SYSTEM Fig.113
SHAFT(ROTOR)SYSTEM Fig.114
LEVER(DEPTH/ROTOR)SYSTEM Fig.115
CASE(CHAIN)SYSTEM(1/2)(2/2) Fig.116
LIFT SYSTEM Fig.117
STOPPER(ROLLING)SYSTEM Fig.118
RAIL(PLANTING)SYSTEM Fig.119
LINK(FLOAT)SYSTEM Fig.120
SLIDE SYSTEM(D TYPE) Fig.121
SLIDE SYSTEM(G TYPE) Fig.122
CAM(LEAD)SYSTEM Fig.123
CAM(FEED/SEEDLING)SYSTEM Fig.124
LEVER(DEPTH/PLANTING)SYSTEM Fig.125
FLOAT(CENTER)SYSTEM Fig.126
ADJUSTMENT(ROLLING)SYSTEM Fig.127
AUTOMATIC CONTROL(ROLLING)SYSTEM Fig.128
RAKE SYSTEM Fig.129
DRIVE(FERTILIZER)SYSTEM(GF TYPE)(1/2)(2/2) Fig.130
DRIVE(FERTILIZER)SYSTEM(DF TYPE)(1/2)(2/2) Fig.131
HARNESS,SENSOR&SWITCH(FERTILIZER)
SYSTEM(F TYPE) Fig.132
AIR CHAMBER(FERTILIZER)SYSTEM(F TYPE)(1/2)(2/2) Fig.133
FRAME(FERTILIZER)SYSTEM(F TYPE)(1/2)(2/2) Fig.134
SEND OUT(FERTILIZER)SYSTEM(F TYPE)(1/3)-(3/3) Fig.135
HOPPER(FERTILIZER)SYSTEM(F TYPE) Fig.136
PIPING(FERTILIZER)SYSTEM(F TYPE) Fig.137
FRAME(SIDE)SYSTEM Fig.138

DRIVE(PLANTING)SYSTEM····· Fig.139
PUMP(OILING/SLIDER)SYSTEM····· Fig.140
FRAME(TANK/SEEDLING)SYSTEM
(EXCEPT R TYPE)(NO.1-1187)····· Fig.141
FRAME(TANK/SEEDLING)SYSTEM
(EXCEPT R TYPE-NO.1188-)····· Fig.142
LEVER(PICKING/SEEDLING)SYSTEM····· Fig.143
FLOAT(SIDE)SYSTEM····· Fig.144
MARKER SYSTEM(EXCEPT R TYPE)(NO.1-1187)····· Fig.145
MARKER SYSTEM(EXCEPT R TYPE-NO.1188-)····· Fig.146
GUARD(PLATE/FRONT)SYSTEM····· Fig.147
PLANTER(LH)SYSTEM····· Fig.148
PLANTER(RH)SYSTEM····· Fig.149
TANK(SEEDLING)SYSTEM····· Fig.150
LAMP(TURN SIGNAL)SYSTEM····· Fig.151
PLATE(FRONT)SYSTEM····· Fig.152
HOLDER(SEEDLING)SYSTEM····· Fig.153
PLATE(HOLDER)SYSTEM(F TYPE EXCEPT R)
(NO.1-60)····· Fig.154
FEED(SEEDLING)SYSTEM····· Fig.155
EXTENSION(TANK/SEEDLING)SYSTEM····· Fig.156
SWITCH(STOPPER/TANK/SLIDE)SYSTEM····· Fig.157
LABEL(CAUTION)(D TYPE EXCEPT R)····· Fig.158
LABEL(CAUTION)(G TYPE EXCEPT R)····· Fig.159
LABEL(CAUTION)(GR TYPE)····· Fig.160
LABEL(CAUTION)(DR TYPE)····· Fig.161
ORNAMENT&LABEL(G TYPE EXCEPT R)····· Fig.162
ORNAMENT&LABEL(D TYPE EXCEPT R)····· Fig.163
ORNAMENT&LABEL(GR TYPE)····· Fig.164
ORNAMENT&LABEL(DR TYPE)····· Fig.165
LABEL(PLANTING INTERVAL&FEED)····· Fig.166
LABEL(CAUTION,CONTROL)
(F TYPE EXCEPT F)····· Fig.167

ORNAMENT&LABEL(CAUTION,CONTROL)
(RF TYPE)……Fig.168
BRUSH&HANDLE(SEND OUT)SYSTEM
(F TYPE)……Fig.169
ACCESSORY(FORK&GREASE)SYSTEM
(G TYPE)……Fig.170
ACCESSORY(FORK&GREASE)SYSTEM
(D TYPE)……Fig.171

COMPONENT PARTS

COMPONENT PARTS
FOR K510-021-000-20 ON Fig.17……Fig.172
COMPONENT PARTS
FOR K510-022-000-00 ON Fig.18……Fig.173
COMPONENT PARTS
FOR 2204-738-450-30 ON Fig.148……Fig.174
COMPONENT PARTS
FOR 2204-739-450-30 ON Fig.149……Fig.175
COMPONENT PARTS
FOR 2232-207-200-30 ON Fig.30……Fig.176
COMPONENT PARTS
FOR 2232-686-250-90 ON Fig.136……Fig.177
COMPONENT PARTS
FOR 2232-686-270-50 ON Fig.136……Fig.178
COMPONENT PARTS
FOR 2233-207-250-40 ON Fig.31……Fig.179

E N G I N E

FD620DMB02

FD620DNB02

FD620DPB02···NP60G E16

5402-097-120-00

FIG. 1 CYLINDER/CRANKCASE

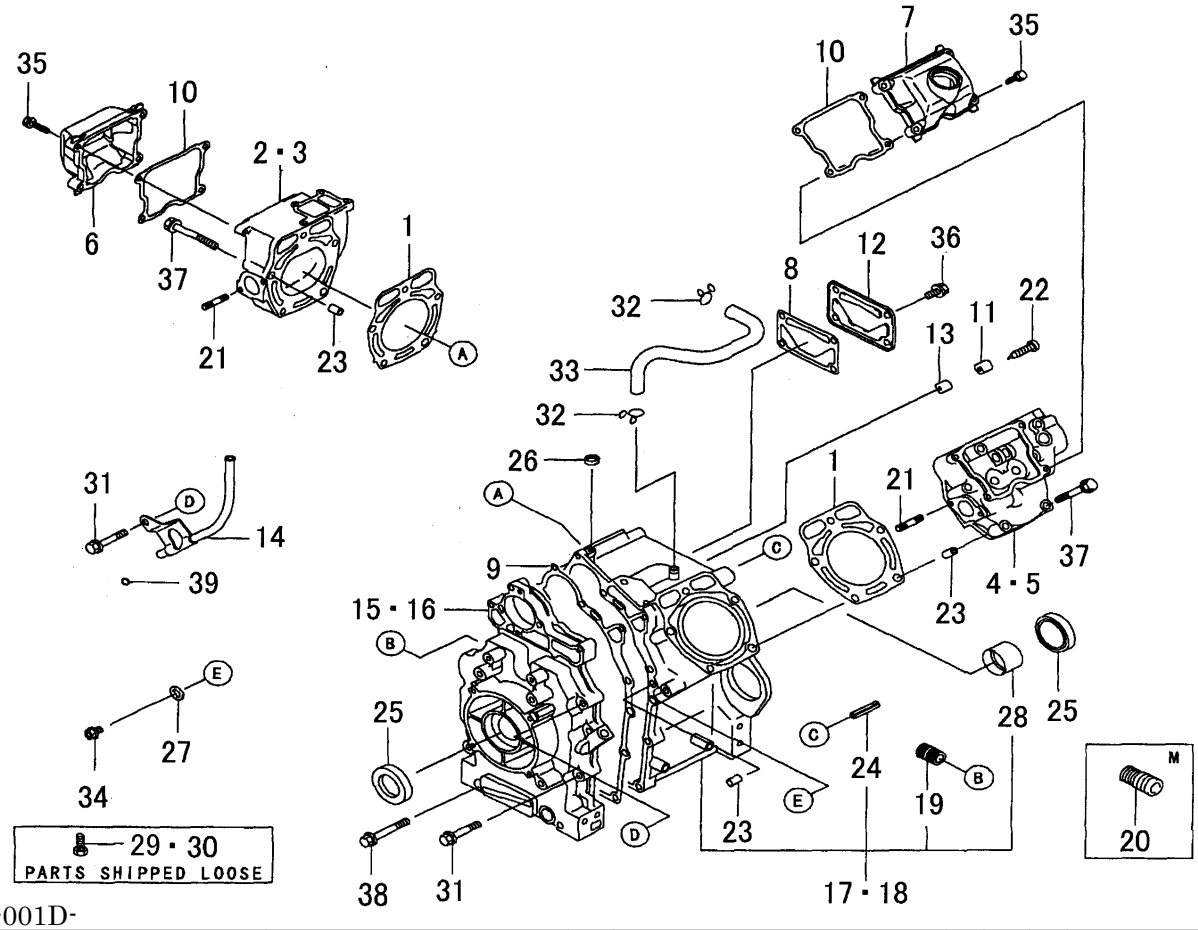

5402-001D-

KEY	PART CODE	DESCRIPTION	SPC	TYPE OF MODEL FD620D MB02	FD620D NB02	FD620D PB02		ITC	COL	GRP	REMARKS
1	5110-042-107-XX	GASKET,HEAD	*	2	2	2					110042107
2	5110-080-828-XX	HEAD-COMPCYLINDER#1	*	1							110080828
3	5110-080-830-XX	HEAD COMP CYLINDER	*		1	1					110080830
4	5110-086-045-XX	HEAD-COMPCYLINDER#2	*	1							110086045
5	5110-086-047-XX	HEAD COMP CYLINDER	*		1	1					110086047
6	5110-222-081-XX	CASE-ROCKER	*	1	1	1					110222081
7	5110-222-082-XX	CASE-ROCKER	*	1	1	1					110222082
8	5110-602-089-XX	GASKET,BREATHER,COVE	*	1	1	1					110602089
9	5110-602-449-XX	GASKET,CRANKCASE COV	*	1	1	1					110602449
10	5110-612-199-XX	GASKET,CASE-ROCKER	*	2	2	2					110612199
11	5132-712-054-XX	PLATE	*	1	1	1					132712054
12	5140-242-292-XX	COVER	*	1	1	1					140242292
13	5161-262-146-XX	VALVE	*	1	1	1					161262146
14	5215-120-329-HX	PIPE,OIL GAUGE	*	1	1	1					3215120329H
15	5490-156-268-XX	COVER-CRANKCASE	*	1							490156268
16	5490-156-310-XX	COVER-CRANKCASE	*		1	1					490156310
17	5491-200-840-XX	CRANKCASE-COMP	*		1	1					491200840
18	5491-202-299-XX	CRANKCASE-COMP	*	1							491202299
19	5590-710-733-XX	JOINT	*		1	1					590710733
20	5590-712-079-XX	JOINT	*	1							590712079
21	5920-042-142-XX	STUD	*	4	4	4					920042142
22	5920-092-308-XX	SCREW	*	1	1	1					920092308
23	5920-431-037-XX	PIN	*	6	6	6					920431037
24	5920-432-227-XX	PIN	*	1	1	1					920432227
25	5920-492-112-XX	SEAL OIL	*	2	2	2					920492112
26	5920-492-255-XX	SEAL-OIL,VC 8X12X2.5	*	1	1	1					920492255
27	5920-650-23X-XX	GASKET,8.5X16X1	*	2	2	2					92065023
28	5921-412-122-XX	BEARING-PLATE	*	1	1	1					921412122
29	5921-512-067-XX	BOLT	*	4							921512067
30	5921-512-067-XX	BOLT	*		2	2					921512067

FIG. 1 CYLINDER/CRANKCASE

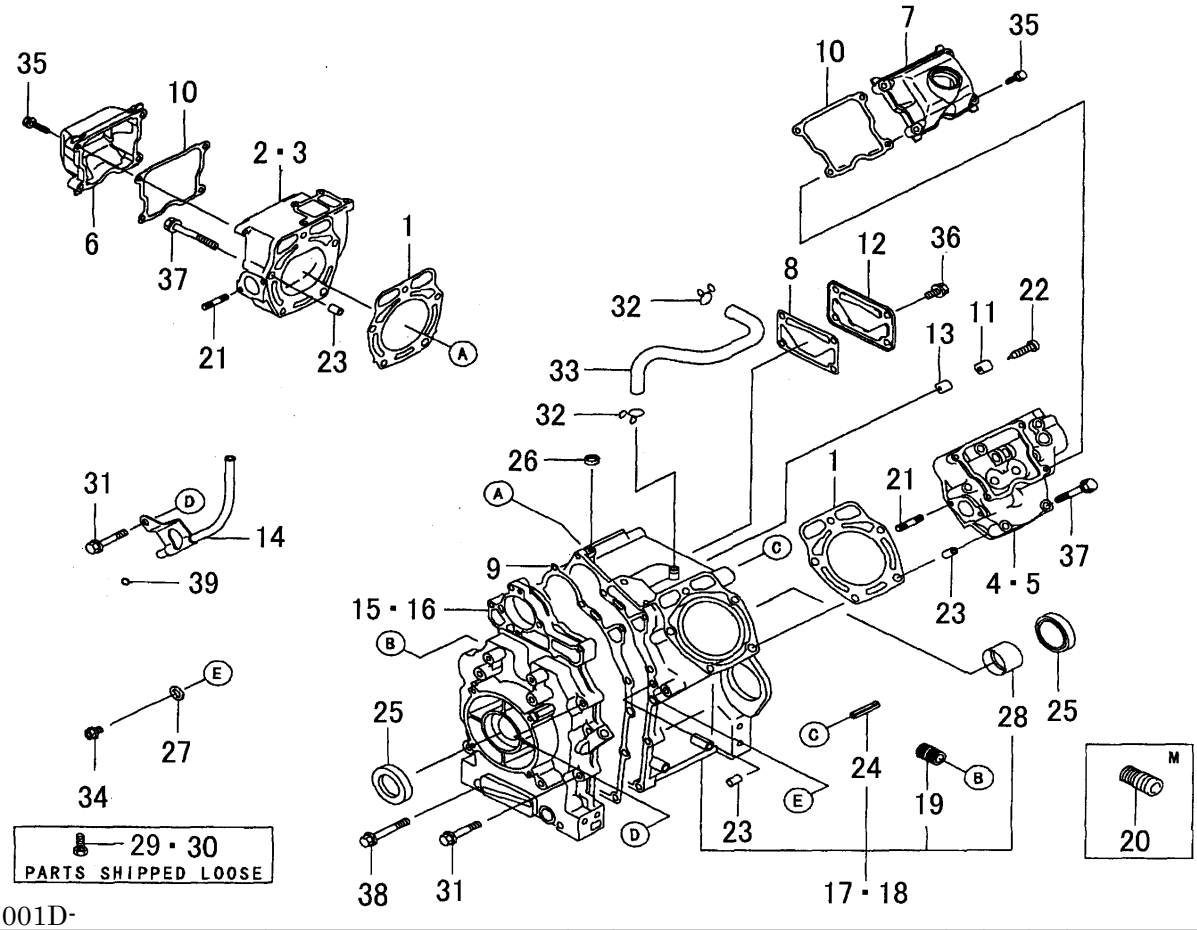

5402-001D-

KEY	PART CODE	DESCRIPTION	SPC	TYPE OF MODEL FD620D MB02	FD620D NB02	FD620D PB02		ITC	COL	GRP	REMARKS
31	5921-532-130-XX	BOLT,8X45	*	6	6	6					921532130
32	5921-702-002-XX	CLAMP	*	2	2	2					921702002
33	5921-922-054-XX	TUBE	*	1	1	1					921922054
34	5130-AB0-812-XX	BOLT-FLANGED,8X12	*	2	2	2					130AB0812
35	5130-BA0-625-XX	BOLT-FLANGED,6X25	*	8	8	8					130BA0625
36	5130-BA0-816-XX	BOLT-FLANGED,8X16	*	4	4	4					130BA0816
37	5130-BA0-865-XX	BOLT-FLANGED,8X65	*	10	10	10					130BA0865
38	5130-CA0-860-XX	BOLT-FLANGED,8X60	*	2	2	2					130CA0860
39	5670-B20-10X-XX	O RING,10MM	*	1	1	1					670B2010

FIG. 2 PISTON/CRANKSHAFT

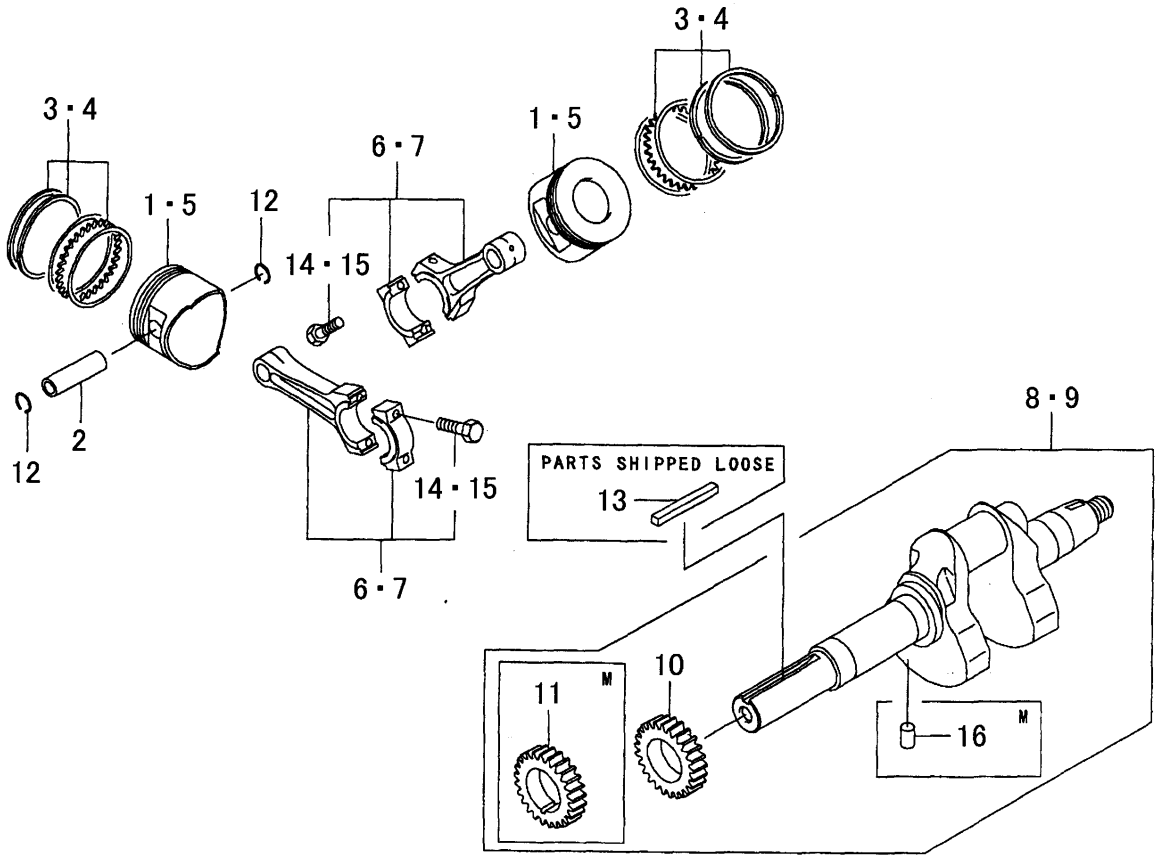

5402-002D-

KEY	PART CODE	DESCRIPTION	SPC	TYPE OF MODEL FD620D MB02	FD620D NB02	FD620D PB02		ITC	COL	GRP	REMARKS
1	5130-012-204-XX	PISTON-ENGINE	*	2	2	2					130012204
2	5130-021-013-XX	PIN-PISTON	*	2	2	2					130021013
3	5130-086-025-XX	RING SET	*	2	2	2					130086025
4	5130-256-008-XX	RING PISTON SET	*	AR	AR	AR					130256008
5	5130-290-028-XX	PISTON-ENGINE,0.50	*	AR	AR	AR					130290028
6	5132-510-034-XX	ROD-ASSY CONNECTING	*	2	2	2					132510034
7	5132-510-042-XX	ROD-ASSY CONNECTING	*	AR	AR	AR					132510042
8	5491-190-005-XX	CRANKSHAFT ASSY	*		1	1					491190005
9	5491-192-130-XX	CRANKSHAFT ASSY	*	1							491192130
10	5590-510-746-XX	GEAR/SPUR	*		1	1					590510746
11	5590-512-112-XX	GEAR-SPUR	*	1							590512112
12	5920-360-21X-XX	RING-SNAP	*	4	4	4					92036021
13	5920-382-103-XX	KEY	*	1	1	1					920382103
14	5921-532-054-XX	BOLT,7X35.2	*	AR	AR	AR					921532054
15	5921-532-054-XX	BOLT,7X35.2	*	4	4	4					921532054
16	5551-A04-08X-XX	PIN-DOWEL	*	1							551A0408

FIG. 3 VALVE/CAMSHAFT

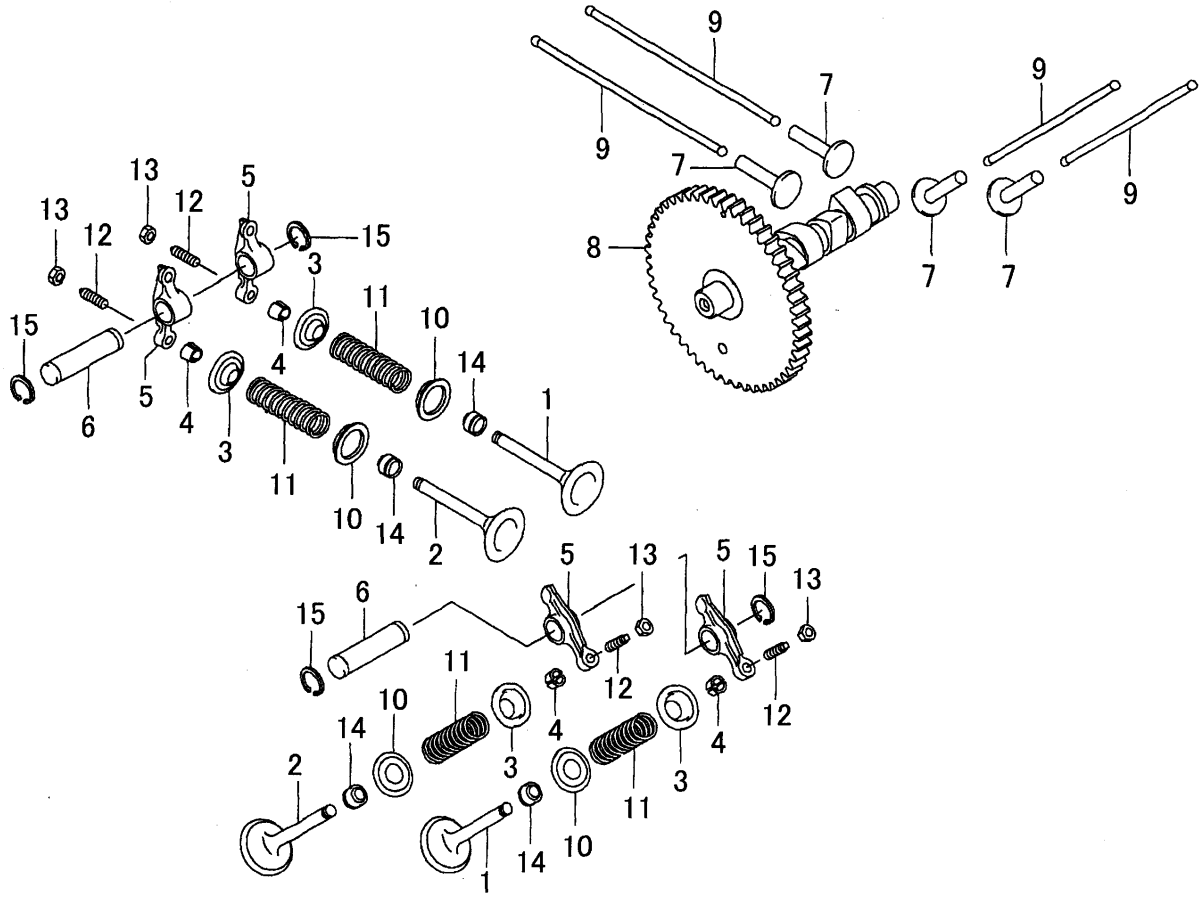

5402-003D-

KEY	PART CODE	DESCRIPTION	SPC	TYPE OF MODEL FD620D MB02	FD620D NB02	FD620D PB02		ITC	COL	GRP	REMARKS
1	5120-042-115-XX	VALVE-INTAKE	*	2	2	2					120042115
2	5120-052-093-XX	VALVE,EXHAUST	*	2	2	2					120052093
3	5120-092-067-XX	RETAINER,VALVE SPRIN	*	4	4	4					120092067
4	5120-112-056-XX	COLLET	*	8	8	8					120112056
5	5120-162-056-XX	ARM-ROCKER	*	4	4	4					120162056
6	5120-202-059-XX	SHAFT-ROCKER	*	2	2	2					120202059
7	5120-322-064-XX	TAPPET	*	4	4	4					120322064
8	5120-440-803-XX	CAMSHAFT,VALVE	*	1	1	1					120440803
9	5131-160-713-XX	ROD-PUSH	*	4	4	4					131160713
10	5391-082-057-XX	RETAINER,SPRING	*	4	4	4					391082057
11	5490-782-082-XX	SPRING	*	4	4	4					490782082
12	5920-091-109-XX	SCREW	*	4	4	4					920091109
13	5920-151-137-XX	NUT	*	4	4	4					920151137
14	5920-492-109-XX	SEAL-OIL	*	4	4	4					920492109
15	5480-J12-00X-XX	RING SNAP/S12	*	4	4	4					480J1200

FIG. 4 LUBRICATION-EQUIPMENT

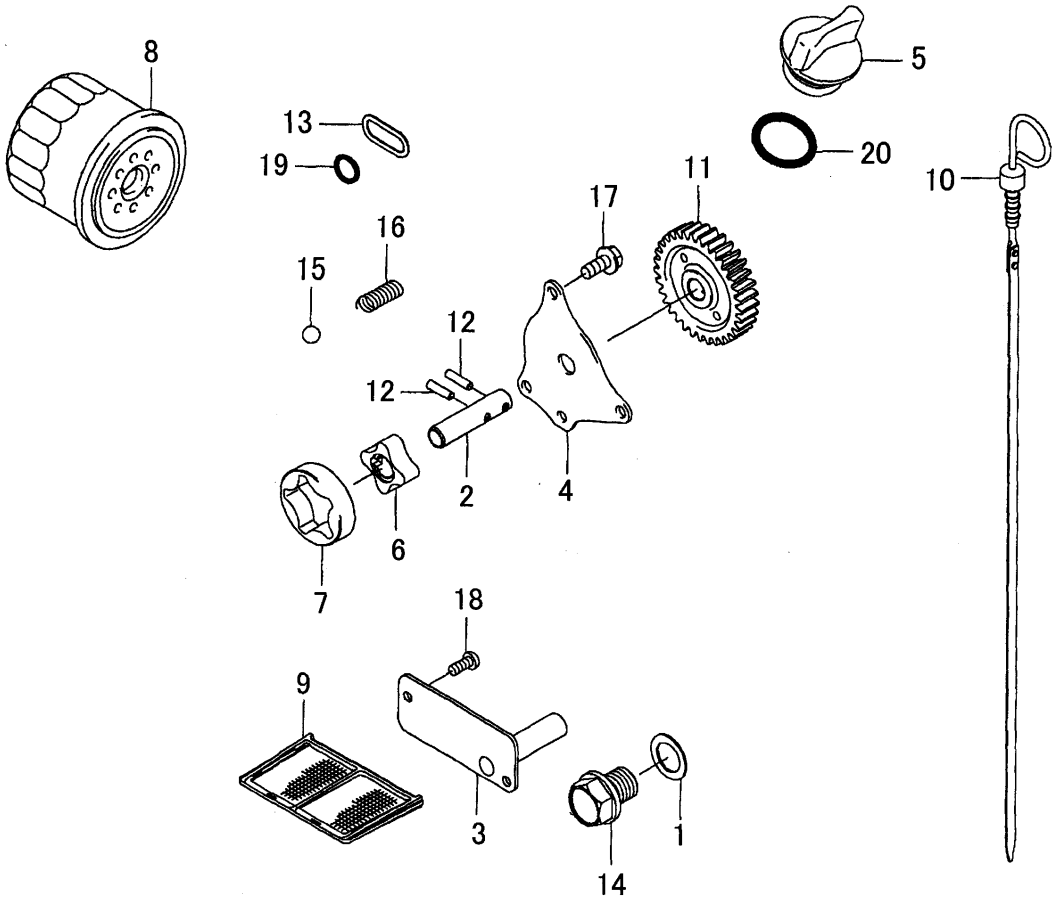

5402-004D-

KEY	PART CODE	DESCRIPTION	SPC	TYPE OF MODEL FD620D MB02	FD620D NB02	FD620D PB02		ITC	COL	GRP	REMARKS
1	5110-092-566-XX	GASKET,DRAIN PLUG	*	1	1	1					110092566
2	5131-072-296-XX	SHAFT,OIL PUMP	*	1	1	1					131072296
3	5131-832-419-XX	PLATE	*	1	1	1					131832419
4	5140-242-113-XX	COVER,OIL PUMP	*	1	1	1					140242113
5	5161-152-126-XX	CAP-OIL FILLER	*	1	1	1					161152126
6	5161-542-053-XX	ROTOR-PUMP,IN	*	1	1	1					161542053
7	5161-542-054-XX	ROTOR,PUMP	*	1	1	1					161542054
8	5490-652-071-XX	FILTER OIL	*	1	1	1					490652071
9	5490-652-072-XX	FILTER/OIL	*	1	1	1					490652072
10	5520-052-122-XX	GAUGE	*	1	1	1					520052122
11	5590-512-114-XX	GEAR-SPUR	*	1	1	1					590512114
12	5920-420-14X-XX	PIN	*	2	2	2					92042014
13	5920-552-086-XX	RING-O	*	1	1	1					920552086
14	5920-662-099-XX	PLUG,DRAIN	*	1	1	1					920662099
15	5921-407-003-XX	BALL	*	1	1	1					921407003
16	5921-452-132-XX	SPRING	*	1	1	1					921452132
17	5130-BA0-612-XX	BOLT-FLANGED,6X12	*	3	3	3					130BA0612
18	5214-AA0-512-XX	SCREW	*	2	2	2					214AA0512
19	5670-B20-11X-XX	O RING,11MM	*	1	1	1					670B2011
20	5670-B30-25X-XX	O RING,25MM	*	1	1	1					670B3025

FIG. 5 COOLING-EQUIPMENT

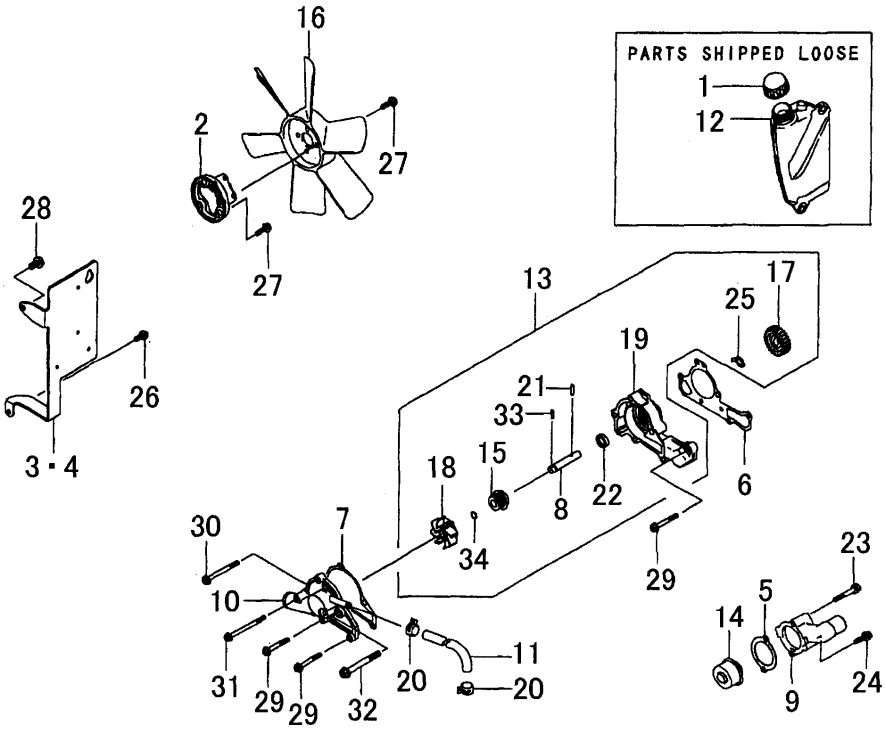

5402-005D-

KEY	PART CODE	DESCRIPTION	SPC	TYPE OF MODEL FD620D MB02	FD620D NB02	FD620D PB02		ITC	COL	GRP	REMARKS
1	5110-121-084-XX	CAP	*	1	1	1					110121084
2	5110-482-039-XX	BRACKET,COOLINF FAN	*	1	1	1					110482039
3	5110-562-996-9H	BRACKET	*	1							1105629969H
4	5110-567-461-9H	BRACKET	*		1	1					1105674619H
5	5110-602-084-XX	GASKET,THERMOSTAT CO	*	1	1	1					110602084
6	5110-602-450-XX	GASKET,PUMP CASE	*	1	1	1					110602450
7	5110-602-451-XX	GASKET,PUMP COVER	*	1	1	1					110602451
8	5131-072-097-XX	SHAFT	*	1	1	1					131072097
9	5140-912-102-XX	COVER	*	1	1	1					140912102
10	5161-420-729-XX	COVER-PUMP	*	1	1	1					161420729
11	5390-622-051-XX	HOSE-COOLING	*	1	1	1					390622051
12	5430-782-055-XX	RESERVOIR	*	1	1	1					430782055
13	5490-442-066-XX	PUMP-WATER	*	1	1	1					490442066
14	5490-542-056-XX	THERMOSTAT	*	1	1	1					490542056
15	5490-631-056-XX	SEAL-MECHANICAL	*	1	1	1					490631056
16	5590-412-084-XX	FAN,COOLING	*	1	1	1					590412084
17	5590-512-113-XX	GEAR-SPUR	*	1	1	1					590512113
18	5592-562-057-XX	IMPELLER	*	1	1	1					592562057
19	5593-362-052-XX	CASE-PUMP	*	1	1	1					593362052
20	5920-371-181-XX	CLAMP	*	2	2	2					920371181
21	5920-420-14X-XX	PIN	*	1	1	1					92042014
22	5920-492-111-XX	SEAL,OIL/IS 10X20	*	1	1	1					920492111
23	5921-502-230-XX	BOLT,6X40	*	1	1	1					921502230
24	5921-502-231-XX	BOLT,6X20	*	1	1	1					921502231
25	5922-002-044-XX	WASHER	*	1	1	1					922002044
26	5130-BA0-616-XX	BOLT-FLANGED,6X16	*	1	1	1					130BA0616
27	5130-BA0-620-XX	BOLT-FLANGED,6X20	*	8	8	8					130BA0620
28	5130-BA0-816-XX	BOLT-FLANGED,8X16	*	1	1	1					130BA0816
29	5130-CA0-645-XX	BOLT-FLANGED,6X45	*	3	3	3					130CA0645
30	5130-CA0-665-XX	BOLT-FLANGED,6X65	*	1	1	1					130CA0665

FIG. 5 COOLING-EQUIPMENT

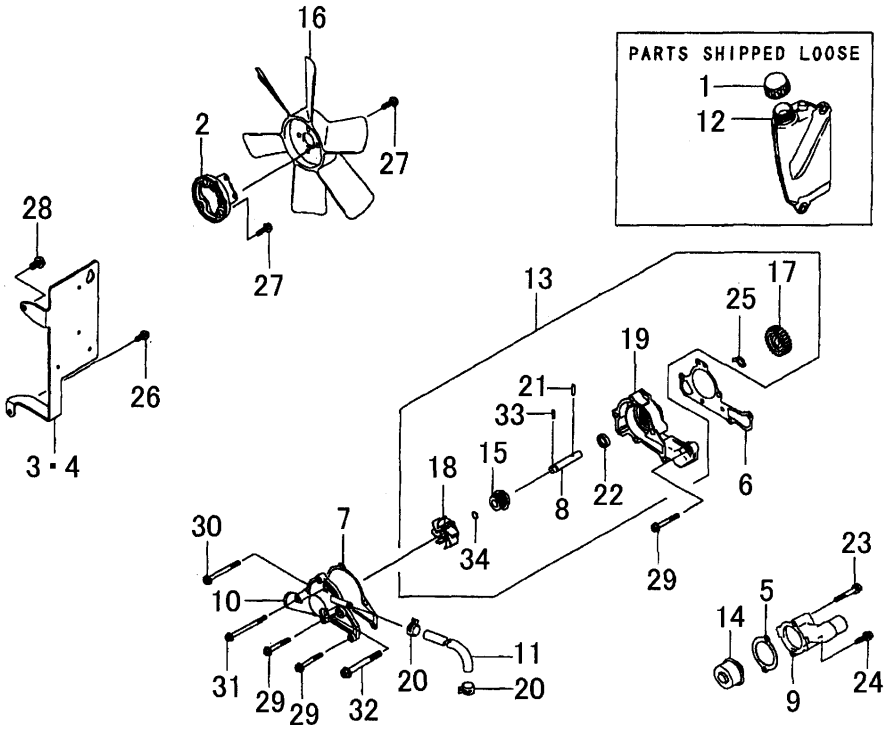

5402-005D-

KEY	PART CODE	DESCRIPTION	SPC	TYPE OF MODEL FD620D MB02	FD620D NB02	FD620D PB02		ITC	COL	GRP	REMARKS
31	5130-CA0-675-XX	BOLT-FLANGED,6X75	*	1	1	1					130CA0675
32	5130-CA0-870-XX	BOLT-FLANGED,8X70	*	1	1	1					130CA0870
33	5551-A03-14X-XX	PIN-DOWEL	*	1	1	1					551A0314
34	5670-B15-07X-XX	O RING	*	1	1	1					670B1507

FIG. 6 ELECTRIC-EQUIPMENT

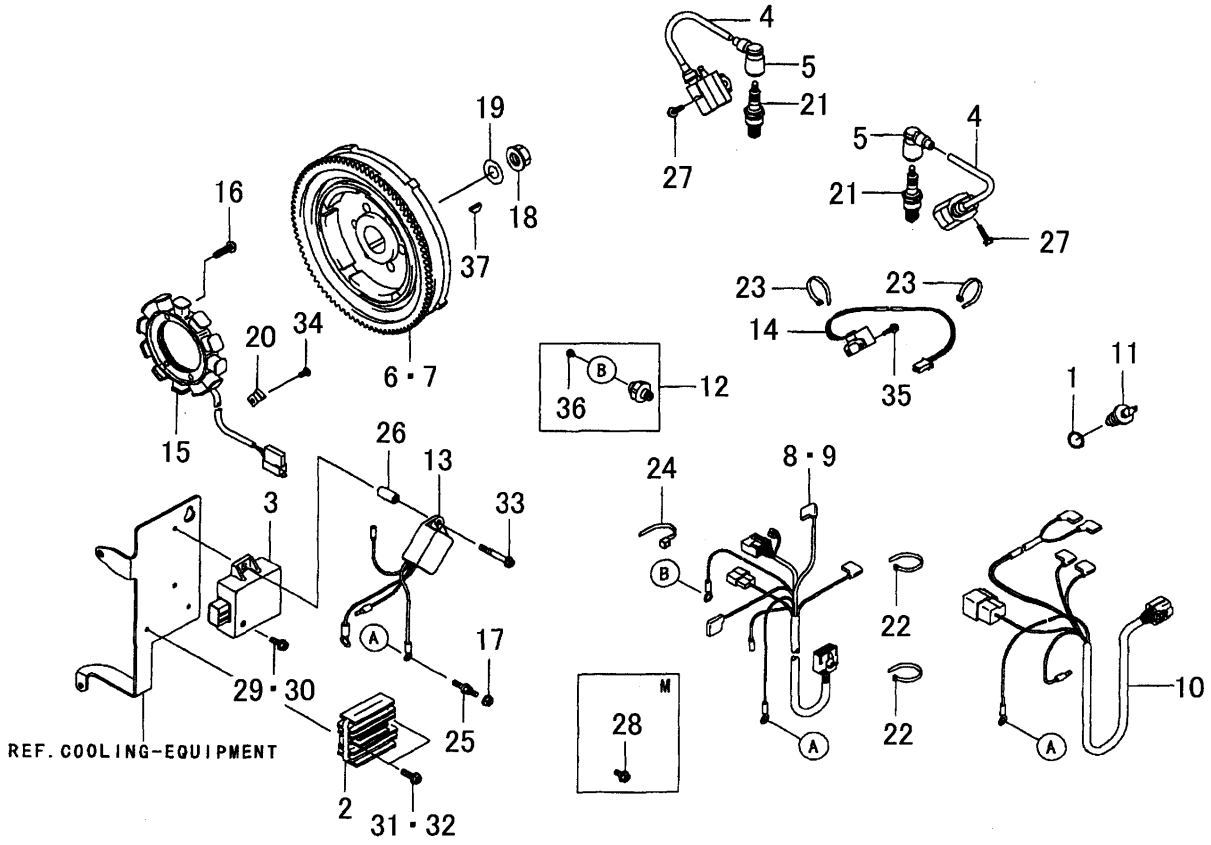

5402-006D-

KEY	PART CODE	DESCRIPTION	SPC	TYPE OF MODEL FD620D MB02	FD620D NB02	FD620D PB02		ITC	COL	GRP	REMARKS
1	5110-092-766-XX	GASKET,16X24X1	*	1	1	1					110092766
2	5210-662-070-XX	REGULATOR,VOLTAGE	*	1	1	1					210662070
3	5211-192-160-XX	IGNITOR	*	1	1	1					211192160
4	5211-212-094-XX	COIL,IGNITION	*	2	2	2					211212094
5	5211-302-060-XX	CAP,SPARK PLUG	*	2	2	2					211302060
6	5211-930-031-XX	FLYWHEEL ASSY	*		1	1					211930031
7	5211-932-188-XX	FLYWHEEL-ASSY	*	1							211932188
8	5260-311-659-XX	HARNESS	*		1	1					260311659
9	5260-311-808-XX	HARNESS	*	1							260311808
10	5260-312-058-XX	HARNESS	*	1	1	1					260312058
11	5270-102-182-XX	SWITCH	*	1	1	1					270102182
12	5270-102-234-XX	SWITCH	*	1	1	1					270102234
13	5270-342-058-XX	RELAY	*	1	1	1					270342058
14	5590-262-066-XX	COIL,HOUSING	*	1	1	1					590262066
15	5590-312-121-XX	COIL,CHARGING	*	1	1	1					590312121
16	5920-092-273-XX	SCREW,6X25	*	4	4	4					920092273
17	5920-151-367-XX	NUT	*		1	1					920151367
18	5920-152-167-XX	NUT	*	1	1	1					920152167
19	5920-222-245-XX	WASHER	*	1	1	1					920222245
20	5920-372-208-XX	CLAMP	*	1	1	1					920372208
21	5920-707-004-XX	PLUG-SPARK,BPR4ES(HG	*	2	2	2					920707004
22	5920-721-195-XX	BAND	*	2	2	2					920721195
23	5920-721-237-XX	BAND	*	2	2	2					920721237
24	5920-727-003-XX	BAND	*	1	1	1					920727003
25	5921-502-197-XX	BOLT	*		1	1					921502197
26	5921-521-846-XX	COLLAR,6.3X12X24.5	*	1	1	1					921521846
27	5130-BA0-518-XX	BOLT-FLANGED,5X18	*	2	2	2					130BA0518
28	5130-BA0-612-XX	BOLT-FLANGED,6X12	*	1							130BA0612
29	5130-BA0-614-XX	BOLT-FLANGED,6X14	*	1							130BA0614
30	5130-BA0-616-XX	BOLT-FLANGED,6X16	*		1	1					130BA0616

FIG. 6 ELECTRIC-EQUIPMENT

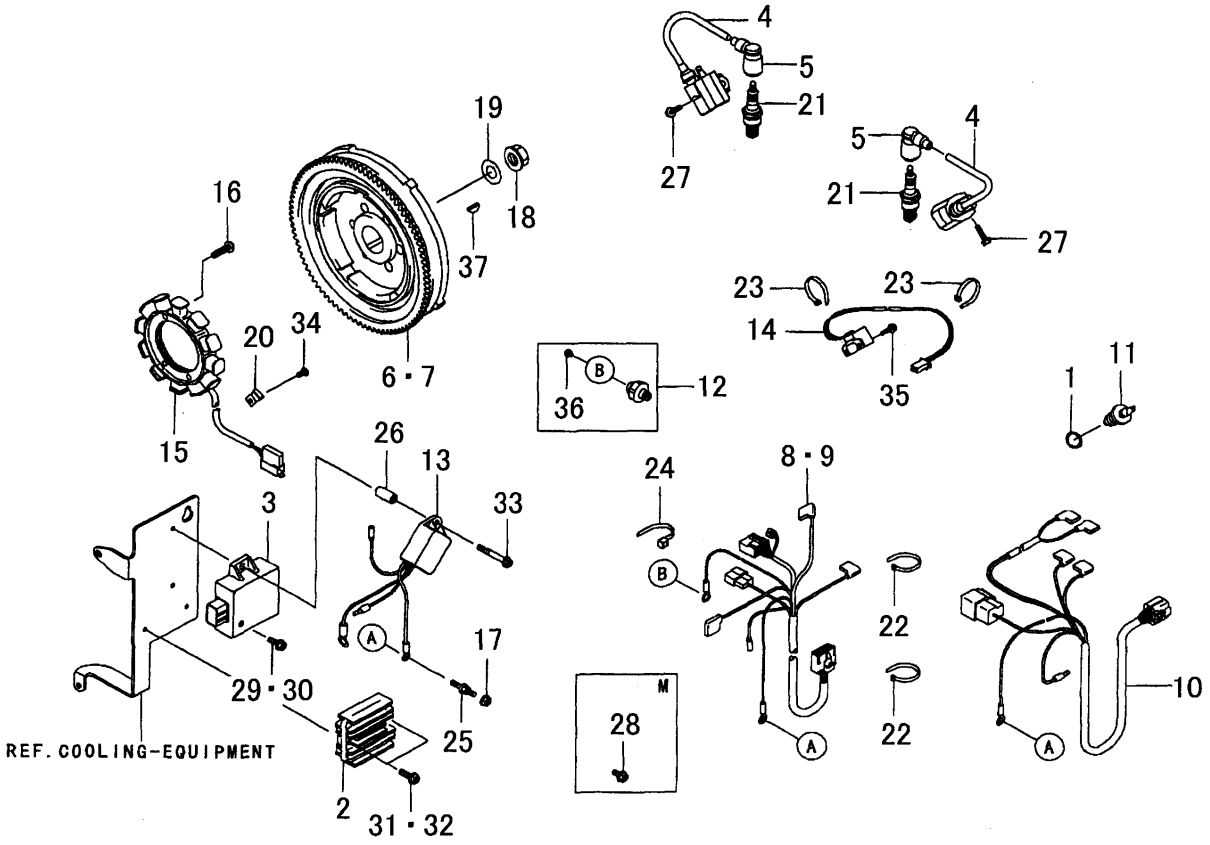

5402-006D-

KEY	PART CODE	DESCRIPTION	SPC	TYPE OF MODEL FD620D MB02	FD620D NB02	FD620D PB02		ITC	COL	GRP	REMARKS
31	5130-BA0-620-XX	BOLT-FLANGED,6X20	*	2							130BA0620
32	5130-BA0-625-XX	BOLT-FLANGED,6X25	*		1	1					130BA0625
33	5130-CA0-645-XX	BOLT-FLANGED,6X45	*	1	1	1					130CA0645
34	5214-AA0-510-XX	SCREW	*	1	1	1					214AA0510
35	5225-AA0-414-XX	SCREW	*	2	2	2					225AA0414
36	5241-AA0-406-XX	SCREW-PAN-WP+,4X6	*	1	1	1					241AA0406
37	5510-A51-00X-XX	KEY	*	1	1	1					510A5100

FIG. 7 CONTROL-EQUIPMENT

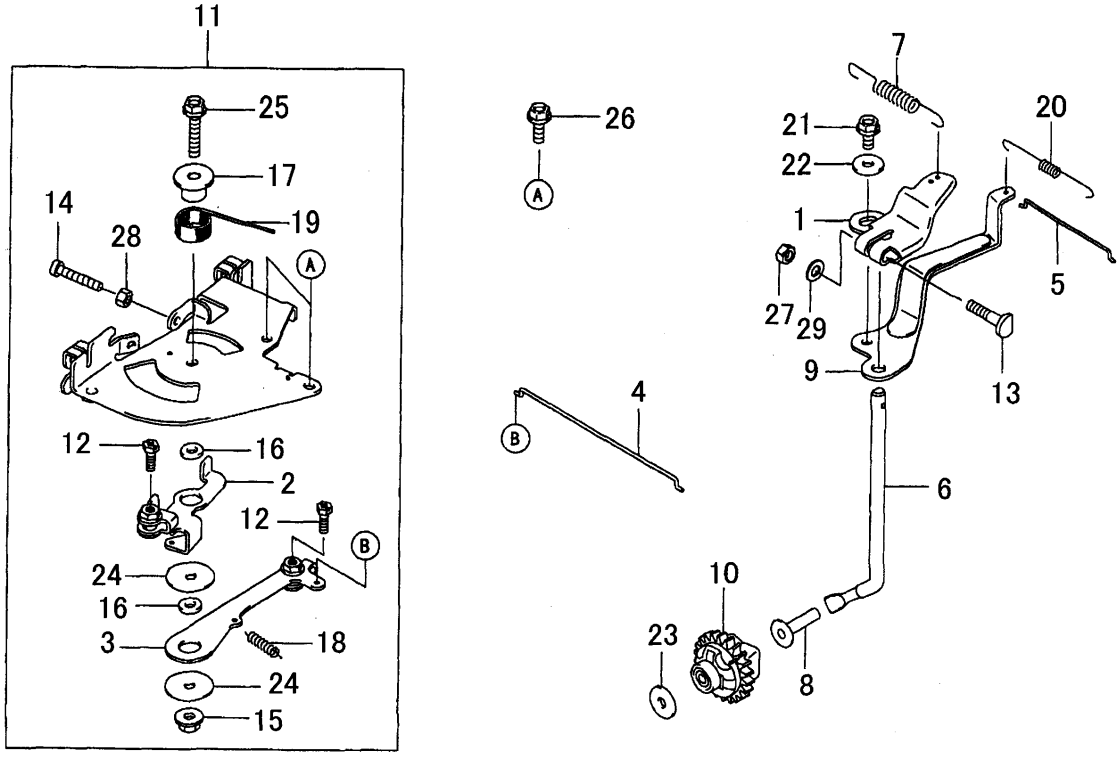

5402-007D-

KEY	PART CODE	DESCRIPTION	SPC	TYPE OF MODEL FD620D MB02	FD620D NB02	FD620D PB02		ITC	COL	GRP	REMARKS
1	5110-532-070-XX	BRACKET	*	1	1	1					110532070
2	5132-362-163-XX	LEVER-COMP	*	1	1	1					132362163
3	5132-362-164-XX	LEVER-COMP	*	1	1	1					132362164
4	5161-712-075-XX	LINK	*	1	1	1					161712075
5	5161-712-097-XX	LINK	*	1	1	1					161712097
6	5390-032-102-XX	ARM-PIVOT	*	1	1	1					390032102
7	5391-292-091-XX	SPRING-GOVERNOR	*	1	1	1					391292091
8	5420-362-060-XX	SLEAVE	*	1	1	1					420362060
9	5491-032-162-XX	ARM-GOVERNOR	*	1	1	1					491032162
10	5491-102-093-XX	GOVERNOR-ASSY	*	1	1	1					491102093
11	5491-132-178-XX	PANEL-COMP-CONTROL	*	1	1	1					491132178
12	5920-022-087-XX	BOLT	*	2	2	2					920022087
13	5920-022-269-XX	BOLT,6X8	*	1	1	1					920022269
14	5920-092-381-XX	SCREW,5X30	*	2	2	2					920092381
15	5920-151-339-XX	NUT	*	1	1	1					920151339
16	5921-432-135-XX	COLLAR,6X13X2.3	*	2	2	2					921432135
17	5921-432-148-XX	COLLAR	*	1	1	1					921432148
18	5921-442-052-XX	SPRING	*	1	1	1					921442052
19	5921-452-056-XX	SPRING	*	1	1	1					921452056
20	5921-452-125-XX	SPRING	*	1	1	1					921452125
21	5921-530-009-XX	BOLT,6X12	*	1	1	1					921530009
22	5922-002-035-XX	WASHER	*	1	1	1					922002035
23	5922-002-036-XX	WASHER	*	1	1	1					922002036
24	5922-002-091-XX	WASHER,6X28X1.6	*	2	2	2					922002091
25	5130-AA0-630-XX	BOLT-FLANGED,6X30	*	1	1	1					130AA0630
26	5130-BA0-616-XX	BOLT-FLANGED,6X16	*	2	2	2					130BA0616
27	5311-AA0-600-XX	NUT-HEX,6MM	*	1	1	1					311AA0600
28	5312-AA0-500-XX	NUT-HEX,5MM	*	2	2	2					312AA0500
29	5411-AA0-600-XX	WASHER-PLAIN,6MM	*	1	1	1					411AA0600

FIG. 8 CARBURETOR

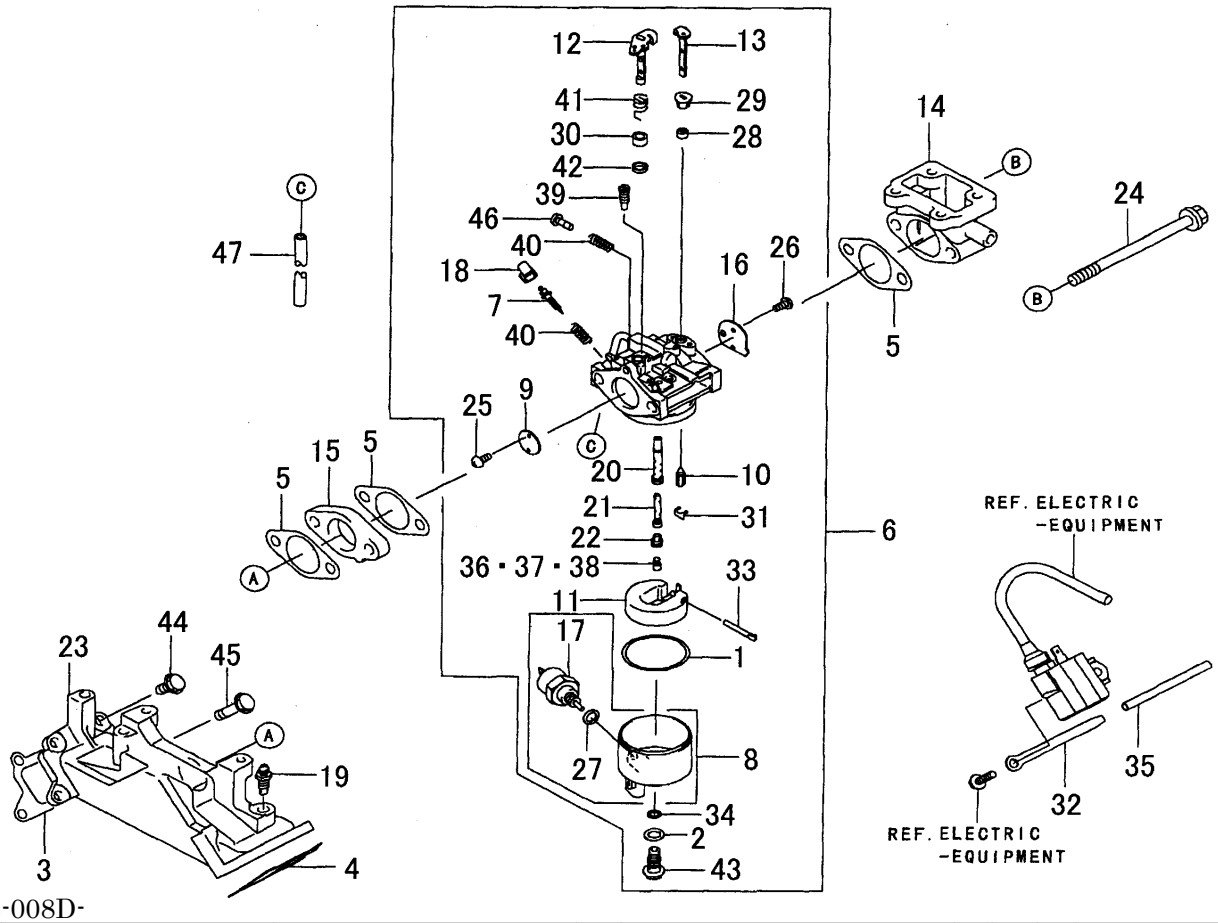

5402-008D-

KEY	PART CODE	DESCRIPTION	SPC	TYPE OF MODEL FD620D MB02	FD620D NB02	FD620D PB02		ITC	COL	GRP	REMARKS
1	5110-092-024-XX	GASKET	*	1	1	1					110092024
2	5110-092-769-XX	GASKET	*	1	1	1					110092769
3	5110-602-087-XX	GASKET,INTAKE MANIFO	*	1	1	1					110602087
4	5110-602-088-XX	GASKET,INTAKE MANIFO	*	1	1	1					110602088
5	5110-612-119-XX	GASKET	*	3	3	3					110612119
6	5150-040-874-XX	CARBURETOR ASSY	*	1	1	1					150040874
7	5160-142-075-XX	SCREW-PILOT AIR	*	1	1	1					160142075
8	5160-202-140-XX	CHAMBER-FLOAT	*	1	1	1					160202140
9	5160-250-020-XX	VALVE-THROTTLE	*	1	1	1					160250020
10	5160-302-067-XX	VALVE,FLOAT	*	1	1	1					160302067
11	5160-312-066-XX	FLOAT	*	1	1	1					160312066
12	5160-412-249-XX	SHAFT-CARBURETOR	*	1	1	1					160412249
13	5160-412-259-XX	SHAFT-CARBURETOR	*	1	1	1					160412259
14	5160-602-201-XX	PIPE-INTAKE	*	1	1	1					160602201
15	5160-732-222-XX	INSULATOR	*	1	1	1					160732222
16	5161-260-725-XX	VALVE	*	1	1	1					161260725
17	5211-882-009-XX	SOLENOID ASSY	*	1	1	1					211882009
18	5390-762-053-XX	LIMITER	*	1	1	1					390762053
19	5430-560-008-XX	BREATHER-BRAKE	*	1	1	1					430560008
20	5491-210-010-XX	NOZZLE-MAIN	*	1	1	1					491210010
21	5491-212-248-XX	NOZZLE-MAIN	*	1	1	1					491212248
22	5491-232-083-XX	HOLDER-MAIN JET	*	1	1	1					491232083
23	5590-760-011-XX	MANIFOLD-INTAKE	*	1	1	1					590760011
24	5920-022-254-XX	BOLT,8X110	*	2	2	2					920022254
25	5920-092-080-XX	SCREW	*	2	2	2					920092080
26	5920-092-081-XX	SCREW	*	2	2	2					920092081
27	5920-222-231-XX	WASHER	*	1	1	1					920222231
28	5920-272-003-XX	COLLAR	*	1	1	1					920272003
29	5920-272-004-XX	COLLAR	*	1	1	1					920272004
30	5920-272-025-XX	COLLAR	*	1	1	1					920272025

FIG. 8 CARBURETOR

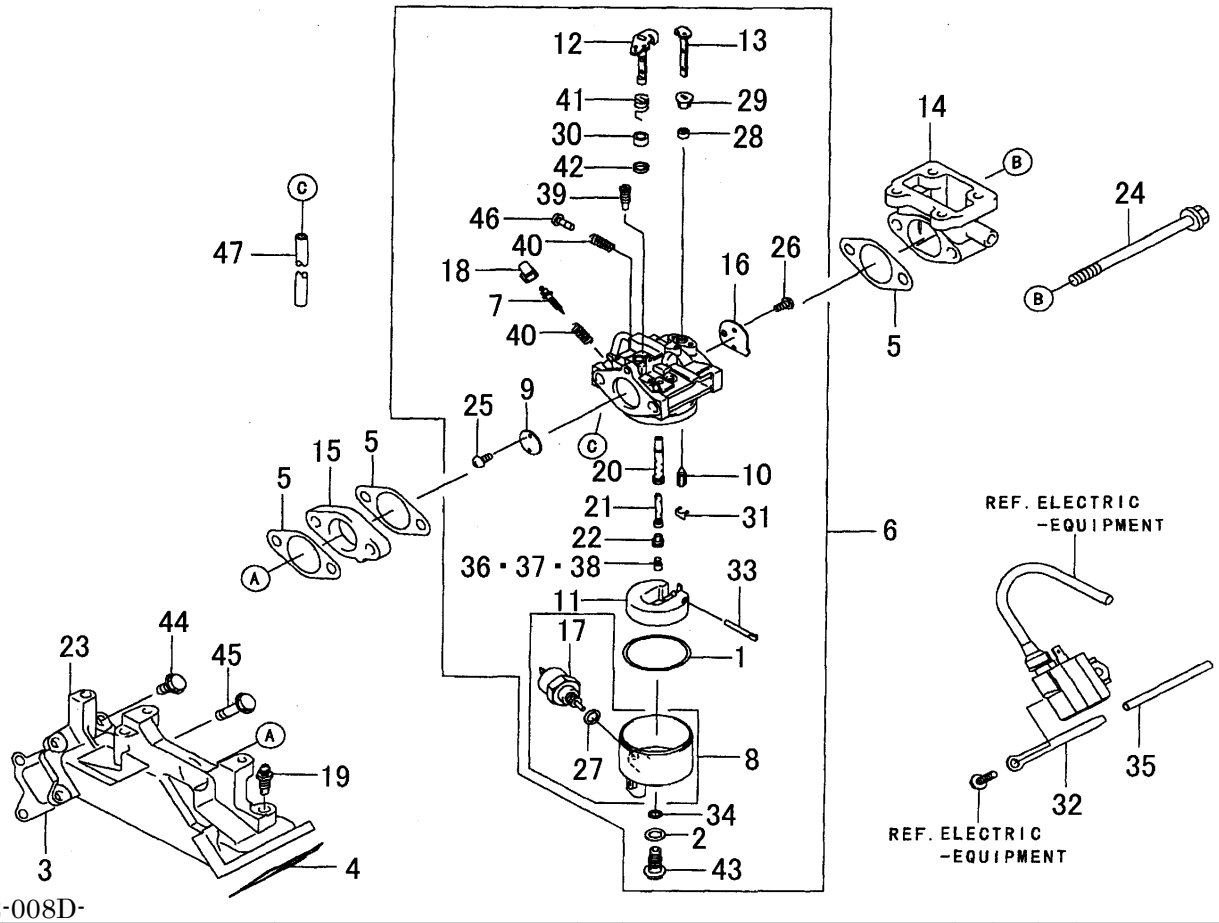

5402-008D-

KEY	PART CODE	DESCRIPTION	SPC	TYPE OF MODEL FD620D MB02	FD620D NB02	FD620D PB02		ITC	COL	GRP	REMARKS
31	5920-332-067-XX	RING, SNAP	*	1	1	1					920332067
32	5920-372-006-XX	CLAMP	*	1	1	1					920372006
33	5920-432-006-XX	PIN	*	1	1	1					920432006
34	5920-552-148-XX	O-RONG	*	1	1	1					920552148
35	5920-592-011-XX	TUBE,5X6X75	*	1	1	1					920592011
36	5920-630-036-XX	JET MAIN,#103.8,3280	*	AR	AR	AR					920630036
37	5920-630-714-XX	JET-MAIN,#101.3	*	AR	AR	AR					920630714
38	5920-632-415-XX	JET MAIN,#106.3	*	1	1	1					920632415
39	5920-640-022-XX	JET-PILOT,#37.5	*	1	1	1					920640022
40	5920-812-009-XX	SPRING	*	2	2	2					920812009
41	5920-812-077-XX	SPRING	*	1	1	1					920812077
42	5920-932-002-XX	SEAL	*	1	1	1					920932002
43	5921-512-068-XX	BOLT	*	1	1	1					921512068
44	5130-BA0-620-XX	BOLT-FLANGED,6X20	*	5	5	5					130BA0620
45	5130-CA0-645-XX	BOLT-FLANGED,6X45	*	3	3	3					130CA0645
46	5214-AA0-414-XX	SCREW-PAN+-,4X14	*	1	1	1					214AA0414
47	5701-Q05-100-0X	TUBE	*	1	1	1					701Q051000

FIG. 9 AIR-FILTER/MUFFLER

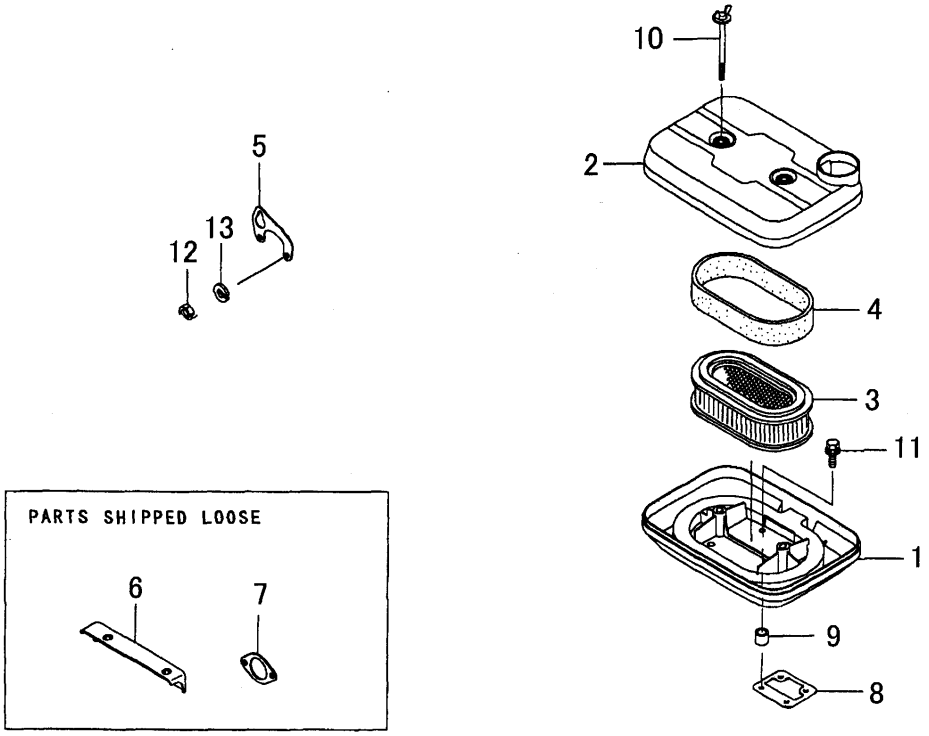

5402-009D-

KEY	PART CODE	DESCRIPTION	SPC	TYPE OF MODEL FD620D MB02	FD620D NB02	FD620D PB02		ITC	COL	GRP	REMARKS
1	5110-112-253-XX	CASE-AIR FILTER	*	1	1	1					110112253
2	5110-112-254-XX	CASE-AIR FILTER	*	1	1	1					110112254
3	5110-130-045-XX	ELEMENT-AIR FILTER	*	1	1	1					110130045
4	5110-132-161-XX	ELEMENT,AIR-FILTER	*	1	1	1					110132161
5	5110-472-057-9H	BRACKET	*	1	1	1					1104720579H
6	5110-472-125-XX	BRACKET	*	1	1	1					110472125
7	5110-602-079-XX	GASKET,MUFFLER	*	2	2	2					110602079
8	5110-612-118-XX	GASKET	*	1	1	1					110612118
9	5921-431-336-XX	COLLAR	*	6	6	6					921431336
10	5921-502-285-XX	BOLT	*	2	2	2					921502285
11	5187-AA0-520-XX	BOLT	*	6	6	6					187AA0520
12	5311-BA0-600-XX	NUT-HEX,6MM	*	1	1	1					311BA0600
13	5461-DA0-600-XX	WASHER-SPRING,6MM	*	1	1	1					461DA0600

FIG. 10 FUEL-TANK/FUEL-VALVE

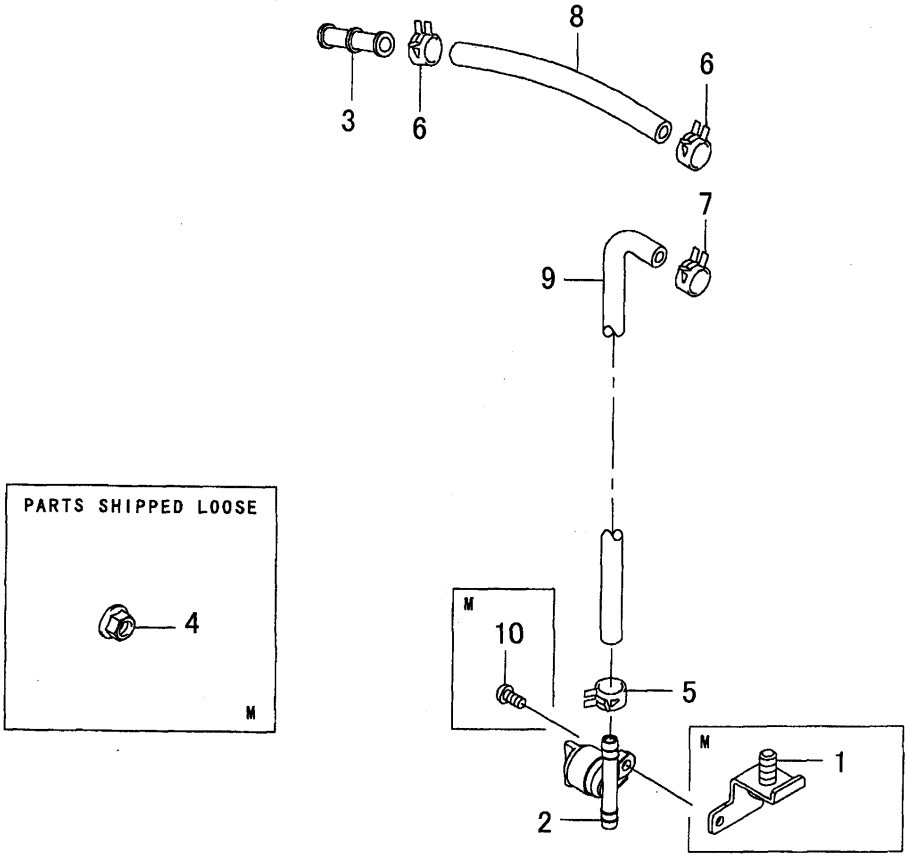

5402-010D-

KEY	PART CODE	DESCRIPTION	SPC	TYPE OF MODEL FD620D MB02	FD620D NB02	FD620D PB02		ITC	COL	GRP	REMARKS
1	5110-552-002-XX	BRACKET	*	1							110552002
2	5510-232-175-XX	TAP ASSY	*	1	1	1					510232175
3	5590-712-119-XX	JOINT	*	1	1	1					590712119
4	5920-151-143-XX	NUT	*	1							920151143
5	5920-372-001-XX	CLAMP	*	1	1	1					920372001
6	5920-372-113-XX	CLAMP	*	2	2	2					920372113
7	5921-702-042-XX	CLAMP	*	1	1	1					921702042
8	5921-902-139-XX	TUBE 5.8X10.8X140	*	1	1	1					921902139
9	5921-912-055-XX	TUBE 5X10X700	*	1	1	1					921912055
10	5220-AA0-510-XX	SCREW	*	1							220AA0510

FIG. 11 STARTER

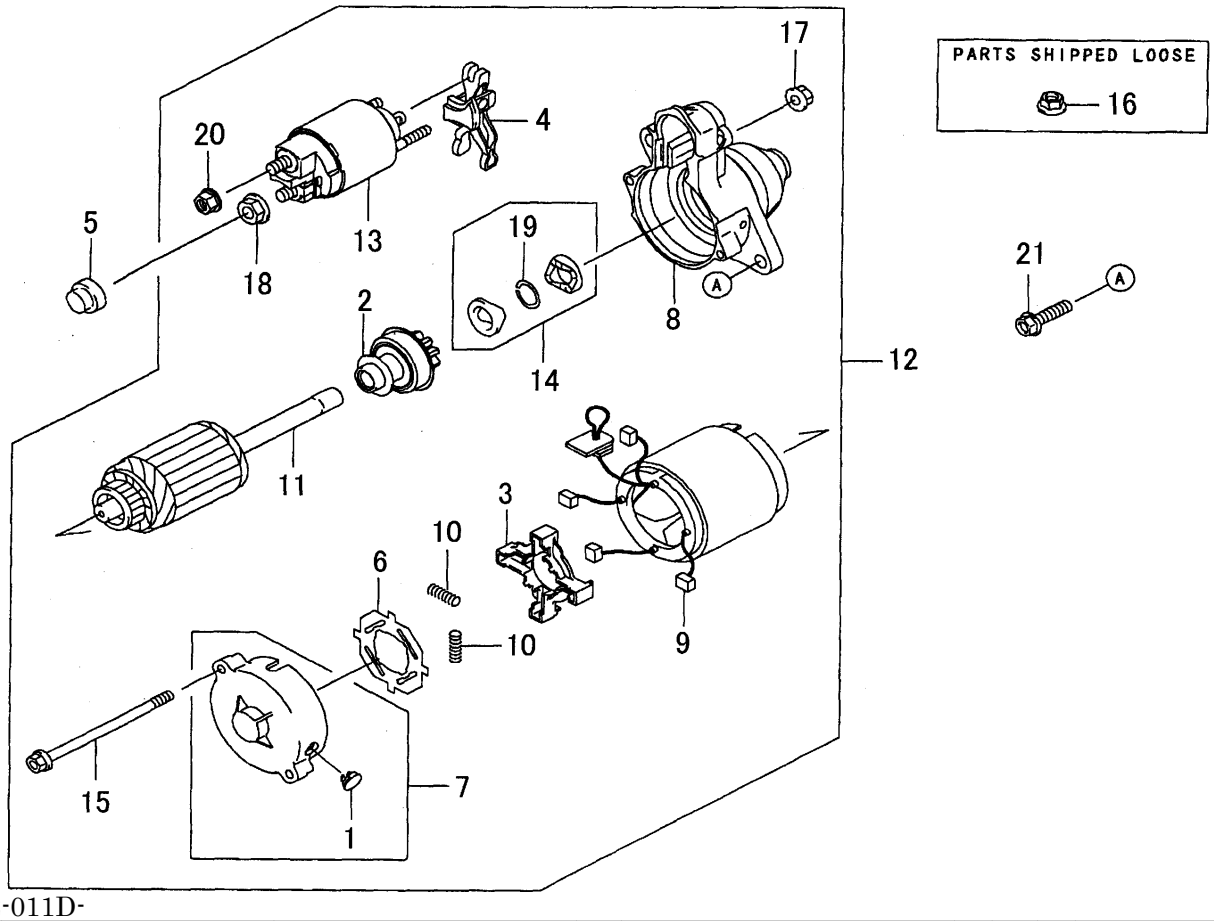

5402-011D-

KEY	PART CODE	DESCRIPTION	SPC	TYPE OF MODEL FD620D MB02	FD620D NB02	FD620D PB02		ITC	COL	GRP	REMARKS
1	5110-652-118-XX	CAP	*	1	1	1					110652118
2	5130-812-085-XX	CLUTCH ASSY	*	1	1	1					130812085
3	5130-912-068-XX	HOLDER	*	1	1	1					130912068
4	5131-682-131-XX	LEVER	*	1	1	1					131682131
5	5140-242-205-XX	COVER	*	1	1	1					140242205
6	5160-732-098-XX	INSULATOR	*	1	1	1					160732098
7	5161-462-235-XX	COVER-ASSY	*	1	1	1					161462235
8	5161-462-241-XX	COVER ASSY	*	1	1	1					161462241
9	5210-392-059-XX	BRUSH	*	4	4	4					210392059
10	5210-402-052-XX	SPRING BRUSH	*	4	4	4					210402052
11	5210-802-054-XX	ARMATURE	*	1	1	1					210802054
12	5211-632-147-XX	STARTER-ELECTRIC	*	1	1	1					211632147
13	5270-107-005-XX	SWITCH	*	1	1	1					270107005
14	5320-852-097-XX	STOPPER	*	1	1	1					320852097
15	5920-022-277-XX	BOLT	*	2	2	2					920022277
16	5920-151-143-XX	NUT	*		1	1					920151143
17	5920-152-146-XX	NUT	*	2	2	2					920152146
18	5920-152-147-XX	NUT	*	1	1	1					920152147
19	5920-332-081-XX	RING,SNAP	*	1	1	1					920332081
20	5922-102-085-XX	NUT	*	1	1	1					922102085
21	5130-CA0-830-XX	BOLT-FLANGED,8X30	*	2	2	2					130CA0830

E N G I N E

E3112UP03···NP60D E16

6004-097-640-30

FIG. 1 CYLINDER HEAD

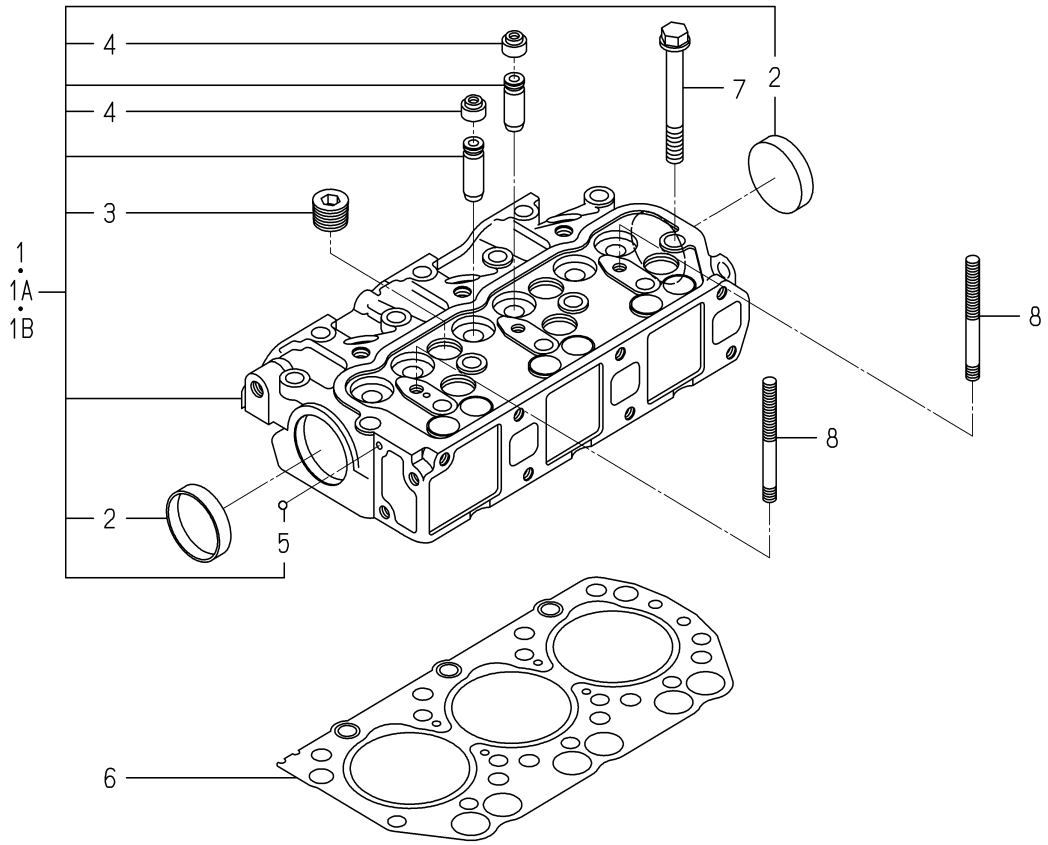

6004-101I-0100,6004-101I-0200

KEY	PART CODE	DESCRIPTION	SPC	TYPE OF MODEL E3112 UP03		ITC	COL	GRP	REMARKS
1	6211-110-057-30	CYLINDERHEAD ASSY	*	1 -395940					
1A	6211-110-057-40	CYLINDERHEAD ASSY	*	1 -410032		1			
1B	6211-110-057-50	CYLINDERHEAD ASSY	*	1 410033-		1			
2	6911-129-006-00	CAP,SEALING	*	2					
3	6209-605-004-10	PLUG/PT1/2	*	5					
4	6212-569-002-00	SEAL,OIL	*	6					
5	V682-200-000-60	BALL,STEEL	*	1					
6	6211-141-029-20	GASKET/CYLINDERHEAD	*	1					
7	6209-000-044-00	BOLT	*	14					
8	6209-300-014-00	STUD	*	2					

FIG. 2 CYLINDER HEAD COVER

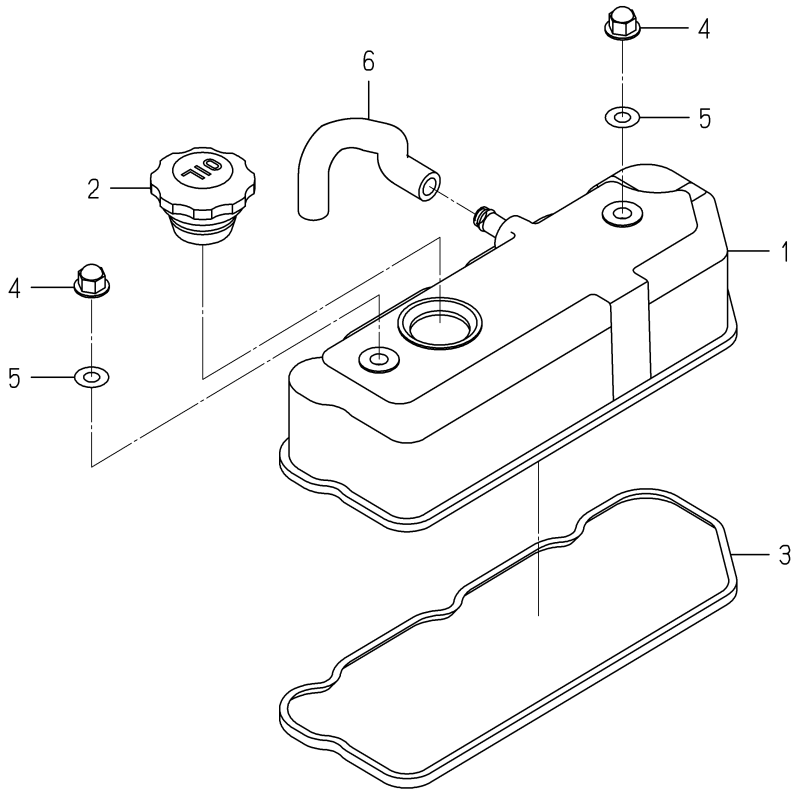

6003-110 -0100

KEY	PART CODE	DESCRIPTION	SPC	TYPE OF MODEL E3112 UP03		ITC	COL	GRP	REMARKS
1	6211-170-004-20	COVER/CYLINDER HEAD	*	1					
2	6211-751-001-10	CAP,OIL FILLER	*	1					
3	6211-173-003-00	SEAL,CYL.HEAD COVER	*	1					
4	6209-490-002-10	NUT/CAP	*	2					
5	6209-572-003-00	GASKET	*	2					
6	6209-360-028-20	HOSE/RUBBER	*	1					

FIG. 3 INLET MANIFOLD

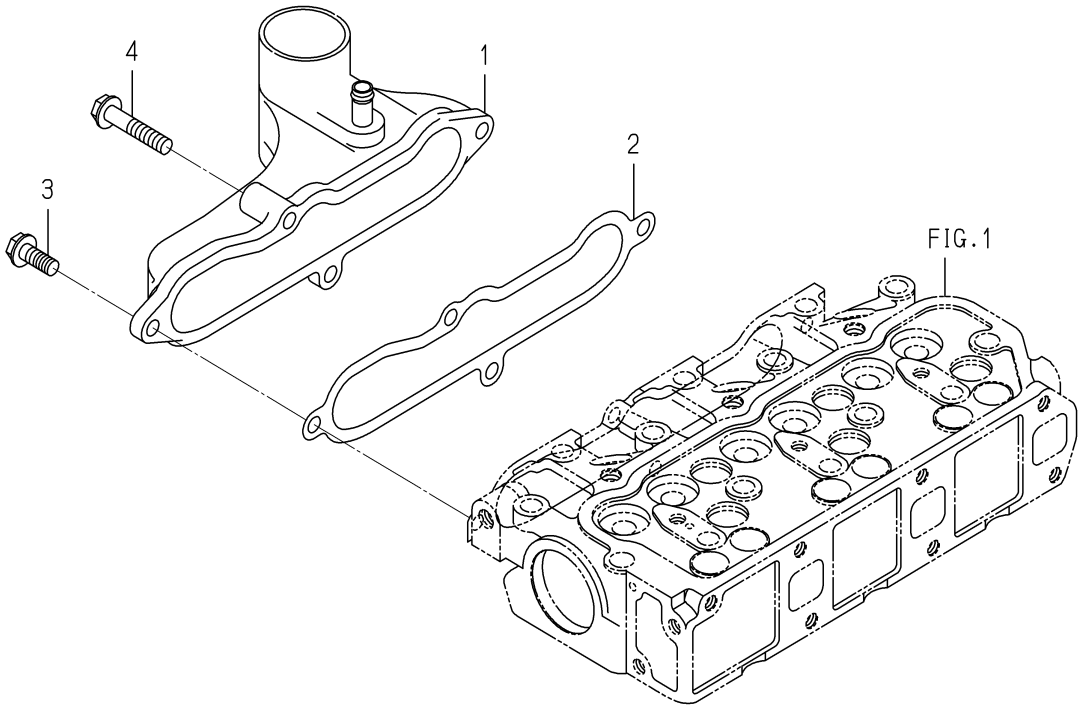

6003-120B-0100

KEY	PART CODE	DESCRIPTION	SPC	TYPE OF MODEL E3112 UP03		ITC	COL	GRP	REMARKS
1	6214-111-011-20	MANIFOLD(INLET) ASSY	*	1					
2	6214-115-001-20	GASKET,INLET MANIFOL	*	1					
3	V231-360-802-00	FLANGEBOLT/M8X20	*	3					
4	V231-360-804-00	FLANGEBOLT/M8X40	*	1					

FIG. 4 EXHAUST MANIFOLD

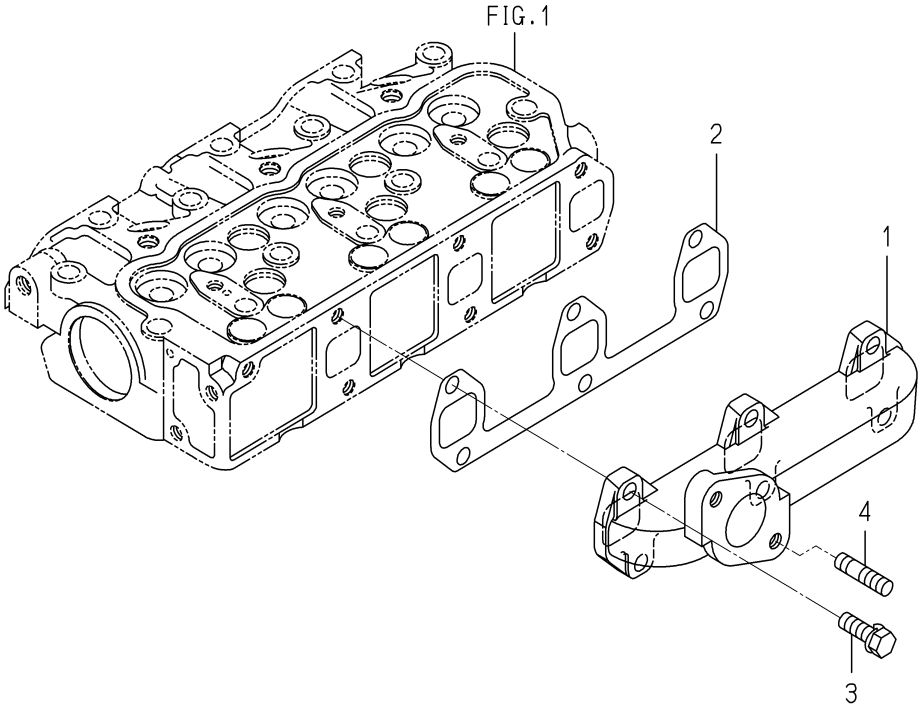

6003-140 -0100

KEY	PART CODE	DESCRIPTION	SPC	TYPE OF MODEL E3112 UP03		ITC	COL	GRP	REMARKS
1	6214-141-008-20	MANIFOLD/EXHAUST	*	1					
2	6214-145-001-30	GASKET,EXH.MANIFOLD	*	1					
3	V211-560-802-50	BOLT,S/M8X25/7T	*	6					
4	6904-110-822-00	STUD	*	2					

FIG. 5 CYLINDER BLOCK

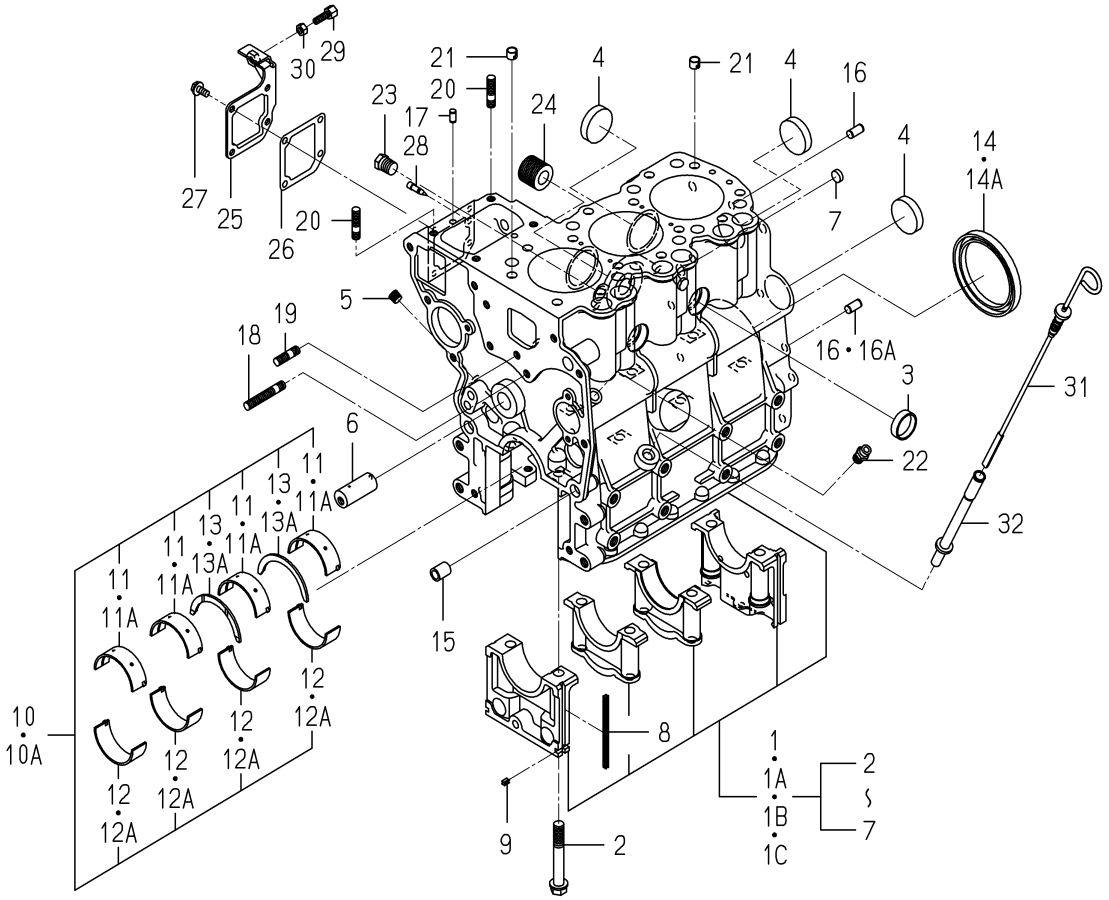

6004-203G-0100

KEY	PART CODE	DESCRIPTION	SPC	TYPE OF MODEL E3112 UP03		ITC	COL	GRP	REMARKS
1	6211-210-037-80	CYLINDERBLOCK ASSY	*	1 -413207					
1A	6211-210-037-90	CYLINDERBLOCK ASSY	*	1 -416985		1			
1B	6211-210-113-00	CYLINDERBLOCK ASSY	*	1 -447964					
1C	6211-210-113-10	CYLINDERBLOCK ASSY	*	1 447965-		3			
2	6209-000-004-10	BOLT	*	8					
3	6209-610-001-10	CUP/SEALING/28	*	2					
4	6209-610-009-00	CUP/SEALING/36	*	4					
5	6209-605-007-10	PLUG/PT1/8	*	3					
6	6212-531-014-00	PIN/IDLEGEAR	*	1					
7	6209-610-008-00	CUP/SEALING/12	*	2					
8	6211-258-001-00	SEAL,BEARING CAP	*	4					
9	6211-258-002-00	SEAL,BEARING CAP/7	*	2					
10	6211-510-001-00	METAL,CRANK SET	*	1 -448371					
10A	6211-510-021-00	BEARING/CRANKSET	*	1 448372-					
11	6211-511-003-00	BEARING/CRANK/UPPER	*	4 -448371					
11A	6211-511-023-00	BEARING/CRANK/UPPER	*	4 448372-					
12	6211-511-004-00	BEARING/CRANK/LOWER	*	4 -448371					
12A	6211-511-024-00	BEARING/CRANK/LOWER	*	4 448372-					
13	6211-599-001-10	BEARING,THRUST CRANK	*	2 -448371					
13A	6211-599-012-00	BEARING/THRUST/CRANK	*	2 448372-					
14	6209-625-001-00	SEAL,OIL	*	1 -435310					
14A	6209-625-012-00	OILSEAL	*	1 435311-					
15	6209-749-001-20	PIN/TUBE	*	2					
16	6213-129-006-00	PIN/STRAIGHT	*	2 -440259					
16A	6213-129-006-00	PIN/STRAIGHT	*	1 440260-					
17	6209-740-005-00	PIN	*	2					
18	6904-110-840-00	STUD/M8X40	*	1					
19	6904-110-818-00	STUD	*	1					
20	6904-110-822-00	STUD	*	2					
21	6294-453-002-00	DOWEL	*	2					

FIG. 5 CYLINDER BLOCK

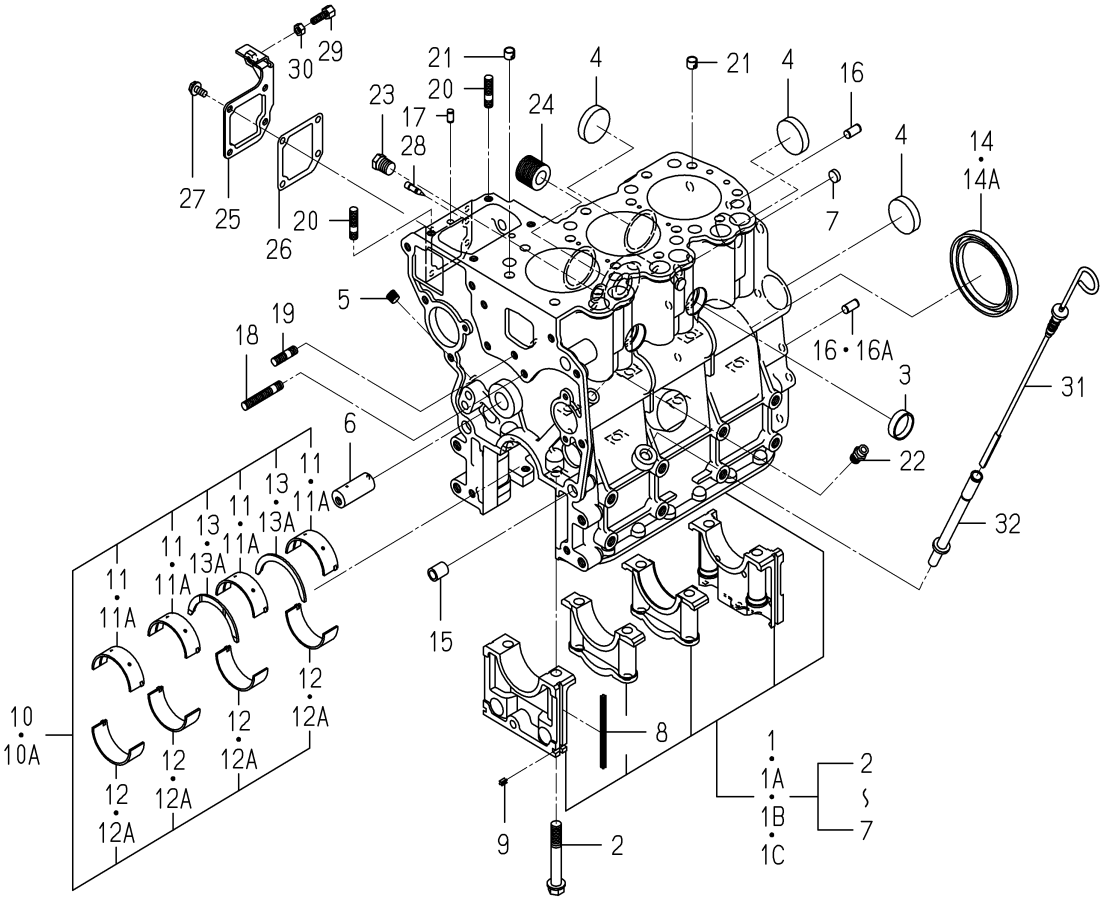

6004-203G-0100

KEY	PART CODE	DESCRIPTION	SPC	TYPE OF MODEL E3112 UP03		ITC	COL	GRP	REMARKS
22	6909-902-299-00	NIPPLE	*	1					
23	V782-160-000-4T	PLUG/SCREW/SEAL	*	1					
24	6213-319-001-00	CONNECTOR,OIL FILTER	*	1					
25	6211-291-001-10	COVER,INJ PUMP	*	1					
26	6211-292-001-20	GASKET/COVER	*	1					
27	V230-360-601-20	FLANGEBOLT/M6X12	*	4					
28	6215-549-013-00	PIN	*	1					
29	6209-788-001-00	BOLT,ADJUST	*	1					
30	V301-260-006-00	NUT/M6	*	1					
31	6211-760-053-10	LEVELGAGE	*	1					
32	6211-766-009-10	GUIDE/LEVELGAGE COMP	*	1					

FIG. 6 BEARING/UNDER SIZE (OPTION)

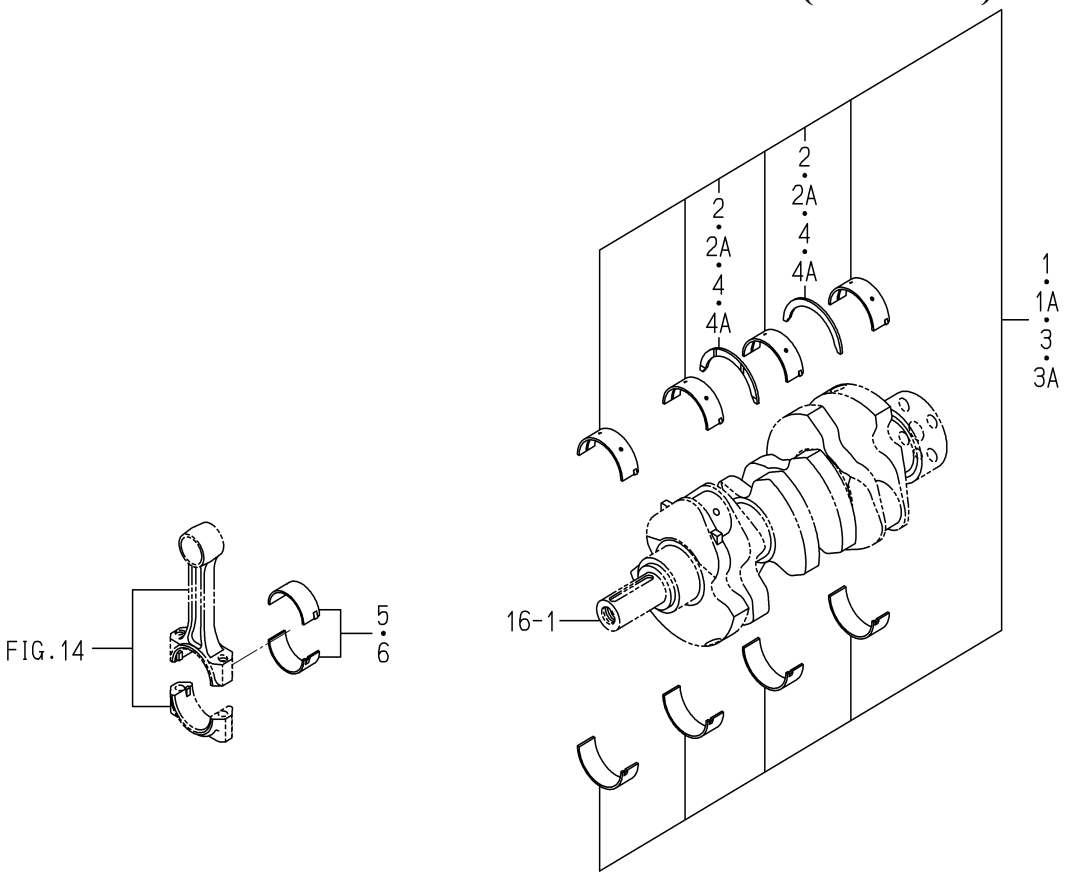

6003-209 -0100

KEY	PART CODE	DESCRIPTION	SPC	TYPE OF MODEL E3112 UP03		ITC	COL	GRP	REMARKS
1	6211-540-001-00	BRG/CRANK/UN050 SET	T	1 -448371					
1A	6211-540-018-00	BRG/CRANK/UN050 SET	T	1 448372-					
2	6211-599-001-10	BEARING,THRUST CRANK	T	2 -448371					
2A	6211-599-012-00	BEARING/THRUST/CRANK	T	2 448372-					
3	6211-560-001-00	BRG/CRANK/UN100 SET	T	1 -448371					
3A	6211-560-007-00	BRG/CRANK/UN100 SET	T	1 448372-					
4	6211-599-001-10	BEARING,THRUST CRANK	T	2 -448371					
4A	6211-599-012-00	BEARING/THRUST/CRANK	T	2 448372-					
5	6212-274-016-00	BRG/CONROD/UN050 SET	T	3					
6	6212-276-016-00	BRG/CONROD/UN100 SET	T	3					

FIG. 7 OIL PAN

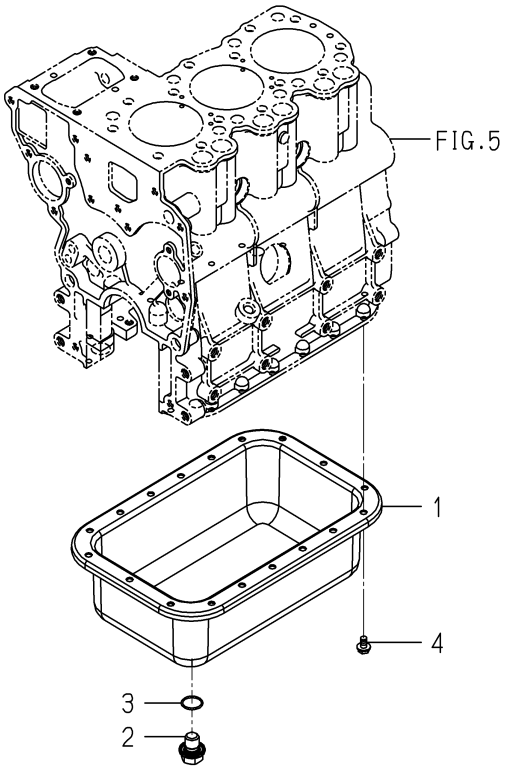

6004-210M-0100

KEY	PART CODE	DESCRIPTION	SPC	TYPE OF MODEL E3112 UP03		ITC	COL	GRP	REMARKS
1	6211-361-104-00	OILPAN COMP	*	1					
2	3805-355-002-20	PLUG/M14X1.5	*	1					
3	V720-102-401-80	O-RING/1A,P18	*	1					
4	V230-360-601-00	FLANGEBOLT/M6X10	*	18					

FIG. 8 REAR PLATE

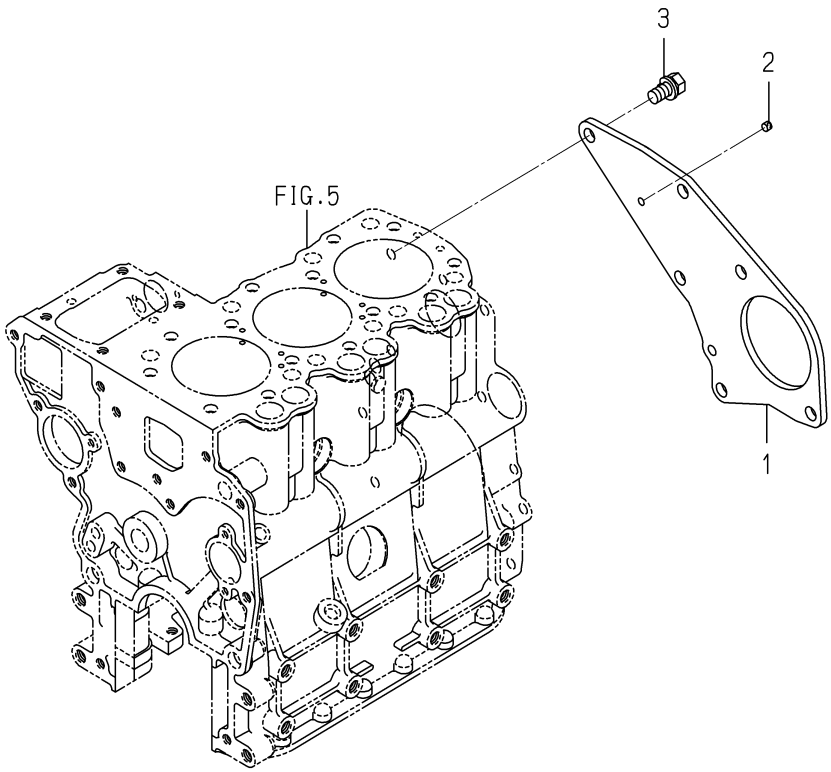

6004-220P-0100

KEY	PART CODE	DESCRIPTION	SPC	TYPE OF MODEL E3112 UP03		ITC	COL	GRP	REMARKS
1	6211-341-081-00	PLATE/REAR	*	1					
2	6211-342-001-30	POINTER	*	1					
3	6901-911-020-00	BOLT,SEMS/M10X20,7T	*	4					

FIG. 9 TIMING GEAR CASE

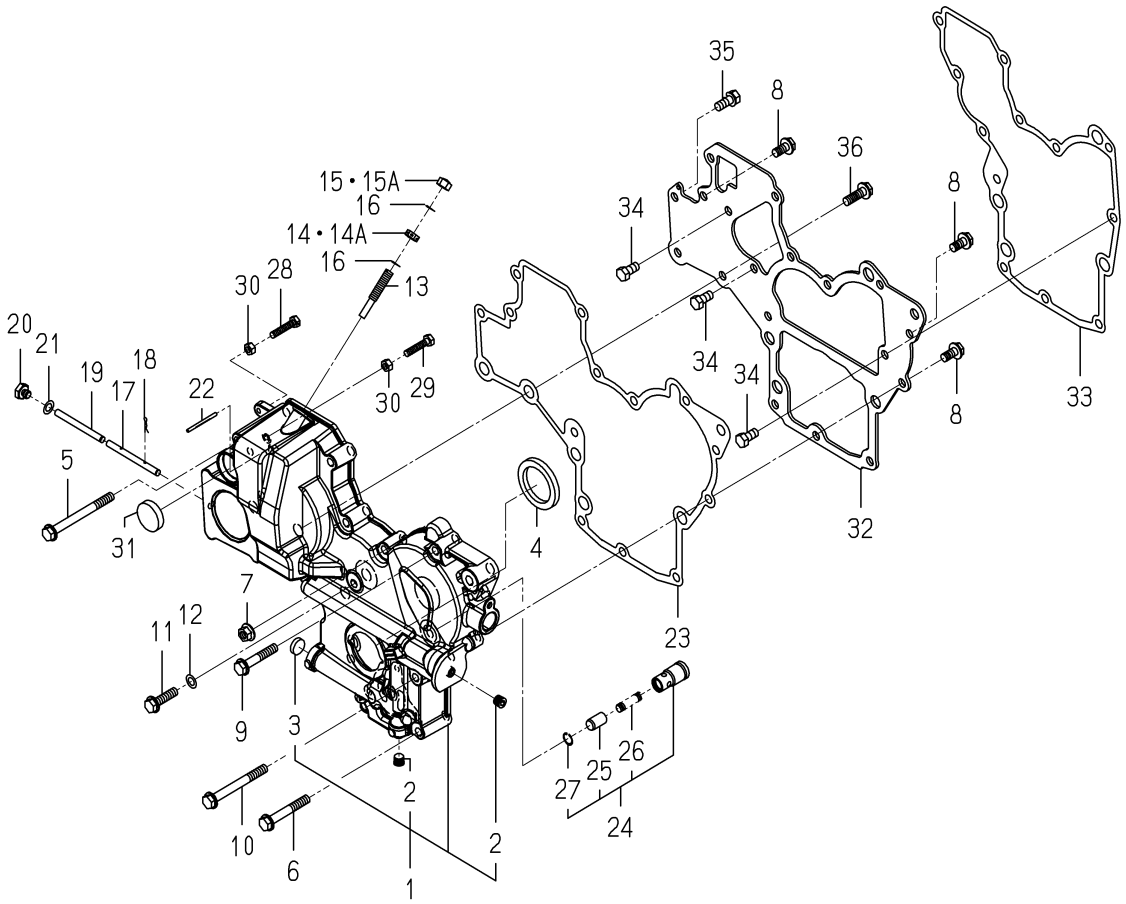

6004-241I-0100,6004-241I-0200

KEY	PART CODE	DESCRIPTION	SPC	TYPE OF MODEL E3112 UP03		ITC	COL	GRP	REMARKS
1	6211-310-069-00	GEARCASE ASSY	*	1					
2	6209-605-007-10	PLUG/PT1/8	*	2					
3	6209-610-007-00	CUP/SEALING/16	*	1					
4	6209-625-002-00	SEAL,OIL	*	1					
5	V231-360-808-50	FLANGEBOLT/M8X85	*	1					
6	V231-360-805-50	FLANGEBOLT/M8X55	*	2					
7	3817-401-001-00	NUT/M08	*	1					
8	V231-360-801-60	FLANGEBOLT/M8X16	*	3					
9	V231-360-804-50	FLANGEBOLT/M8X45	*	5					
10	V231-360-807-50	FLANGEBOLT/M8X75	*	1					
11	V231-360-803-00	FLANGEBOLT/M8X30	*	1					
12	6209-500-003-00	WASHER/08X14X01	*	1					
13	6215-546-003-30	STOPPER/FULLLOAD	*	1					
14	6209-409-001-00	NUT/M8	*	1 -452993					
14A	V305-260-008-00	NUT/M8	*	1 452994-					
15	V341-120-008-00	NUT,CAP/M8	*	1 -449049					
15A	6209-490-006-00	NUT/CAP	*	1 449050-					
16	6209-920-002-00	PACKING	*	2					
17	6215-542-004-20	PIN/ARM	*	1					
18	P117-303-003-00	PIN/SNAP	*	2					
19	6215-542-005-20	PIN	*	1					
20	6209-600-004-00	PLUG/SCREW	*	1					
21	6209-500-003-00	WASHER/08X14X01	*	1					
22	6209-740-001-00	PIN,GROOVE	*	1					
23	6211-312-003-20	GASKET/GEARCASE	*	1					
24	6213-160-002-20	VALVE/RELIEF ASSY	*	1					
25	6213-161-001-20	PISTON/VALVE/RELIEF	*	1					
26	6213-164-001-00	SPRING/RELIEF VALVE	*	1					
27	V705-140-012-00	RING,SNAP/12 C	*	1					
28	6209-050-001-00	BOLT/M6	*	1					

FIG. 9 TIMING GEAR CASE

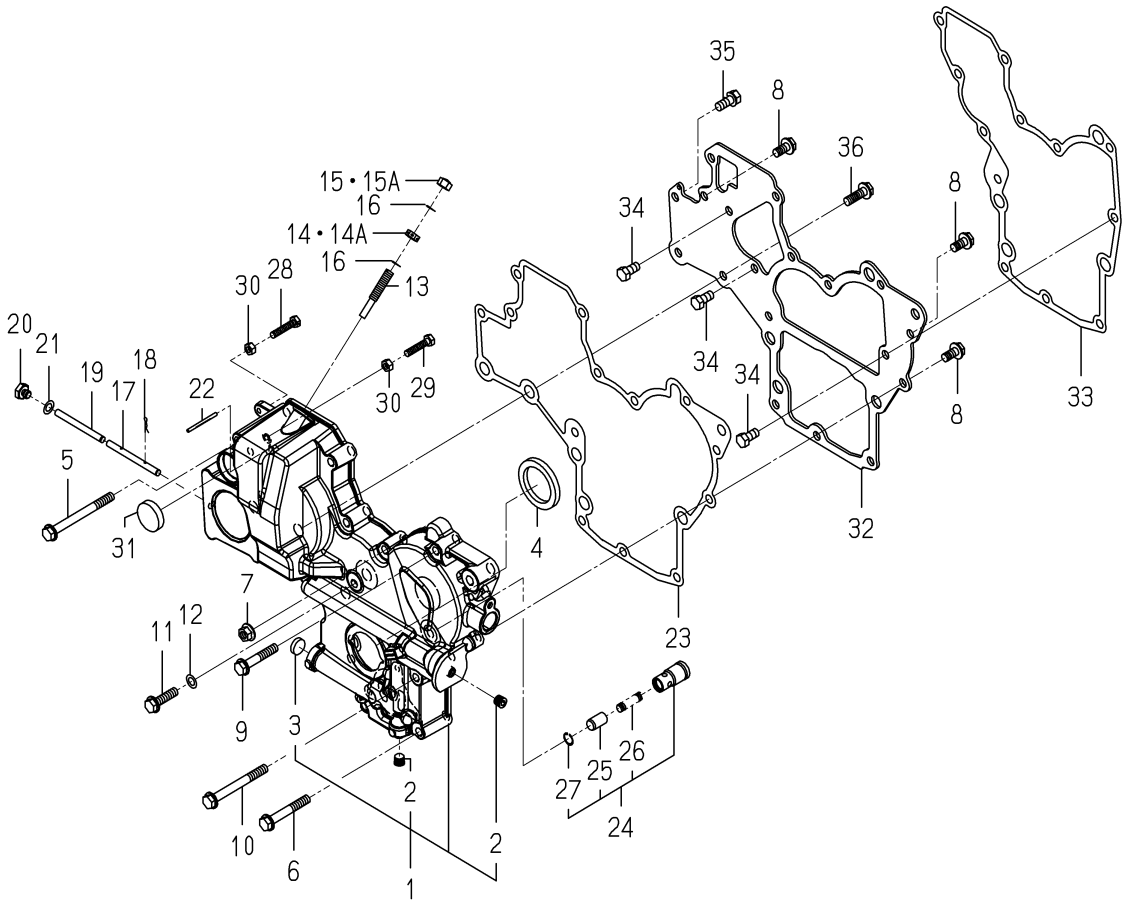

6004-241I-0100,6004-241I-0200

KEY	PART CODE	DESCRIPTION	SPC	TYPE OF MODEL E3112 UP03		ITC	COL	GRP	REMARKS
29	6209-050-002-00	BOLT/M6	*	1					
30	V301-260-006-00	NUT/M6	*	2					
31	3625-540-004-00	CAP,BLANK/30	*	1					
32	6211-311-048-10	PLATE/FRONT	*	1					
33	6211-312-004-20	GASKET/PLATE	*	1					
34	6902-050-816-00	BOLT	*	3					
35	V211-560-802-00	BOLT,S/M8X20/7T	*	1					
36	V231-360-802-50	FLANGEBOLT/M8X25	*	2					

FIG. 10 HANGER

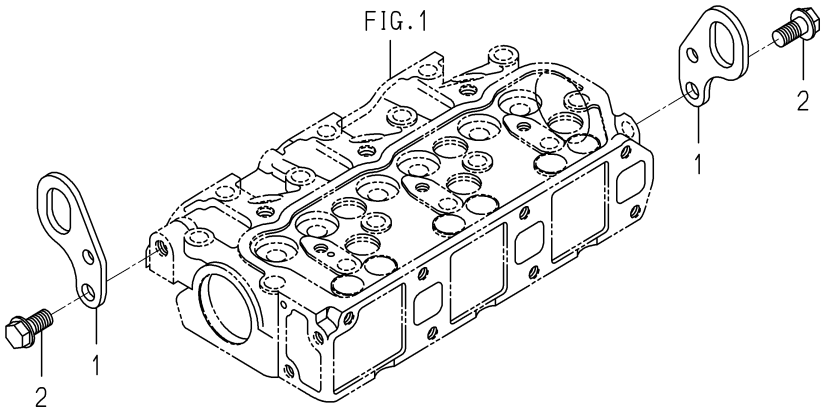

6003-290 -0100

KEY	PART CODE	DESCRIPTION	SPC	TYPE OF MODEL E3112 UP03		ITC	COL	GRP	REMARKS
1	6211-777-007-30	HANGER	*	2 -385783					
2	V233-361-002-00	FLANGEBOLT/M10X20	*	2 -385783					

FIG. 11 HANGER

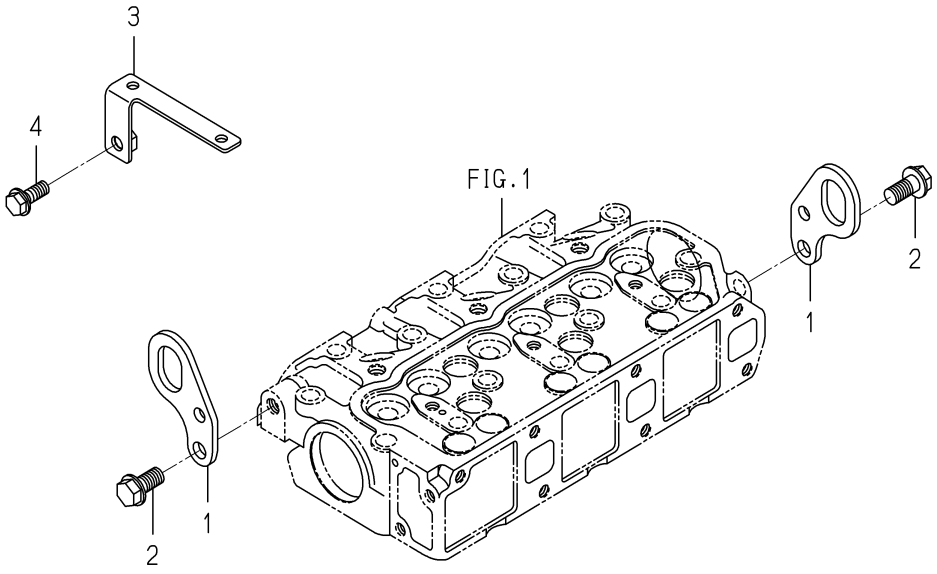

6004-290C-0100

KEY	PART CODE	DESCRIPTION	SPC	TYPE OF MODEL E3112 UP03		ITC	COL	GRP	REMARKS
1	6211-777-007-30	HANGER	*	2 385784-					
2	V233-361-002-00	FLANGEBOLT/M10X20	*	2 385784-					
3	2213-101-210-00	GUIDE/HARNESS COMP	*	1 385784-					
4	V231-360-802-00	FLANGEBOLT/M8X20	*	1 385784-					

FIG. 12 VALVE

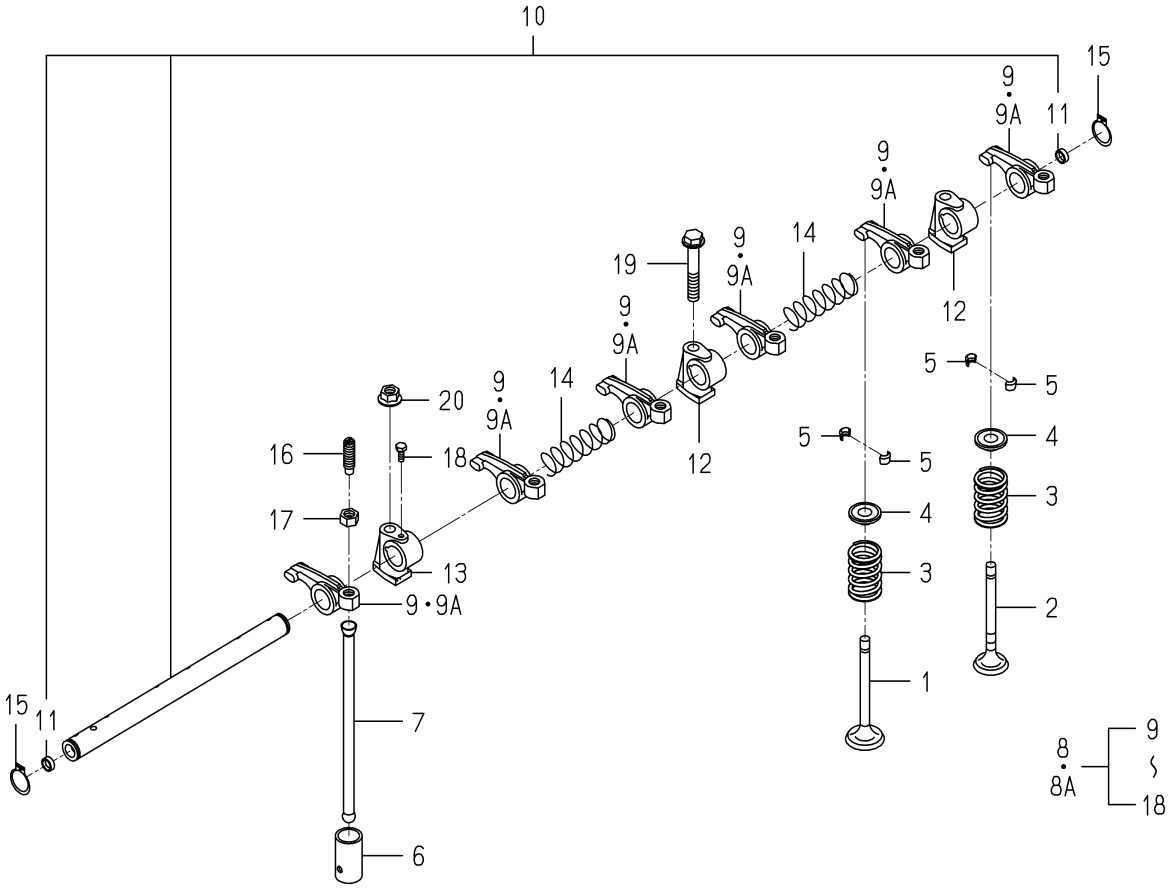

6004-301 -0100

KEY	PART CODE	DESCRIPTION	SPC	TYPE OF MODEL E3112 UP03		ITC	COL	GRP	REMARKS
1	6212-551-028-00	VALVE/INTAKE	*	3					
2	6212-552-014-00	VALVE/EXHAUST	*	3					
3	6212-561-001-10	SPRING/VALVE	*	6					
4	6212-563-005-00	SEAT/VALVESPRING	*	6					
5	6212-565-001-00	CUTTER,VALVE	*	12					
6	6212-571-006-00	TAPPET	*	6					
7	6212-575-002-00	ROD,PUSH	*	6					
8	6212-600-002-10	ROCKERSHAFT ASSY	*	1 -399472					
8A	6212-600-002-30	ROCKERSHAFT ASSY	*	1 399473-		1			
9	6212-611-004-10	ROCKERARM	*	6 -399472					
9A	6212-611-004-10	ROCKERARM	*	6 399473-					
10	6212-620-001-20	SHAFT/ROCKERARM ASSY	*	1					
11	6212-626-002-10	PLUG	*	2					
12	6212-628-004-00	BRACKET ROCKER SHAFT	*	2					
13	6212-628-005-00	BRACKET,ROCKER SHAFT	*	1					
14	6209-940-004-00	SPRING	*	2					
15	V704-140-016-00	RING,SNAP/16 C	*	2					
16	6212-616-002-00	SCREW ADJUST	*	6					
17	6209-409-003-00	NUT	*	6					
18	6209-000-002-00	BOLT	*	1					
19	V231-360-805-00	FLANGEBOLT/M8X50	*	1					
20	3817-401-001-00	NUT/M08	*	2					

FIG. 13 CAM SHAFT

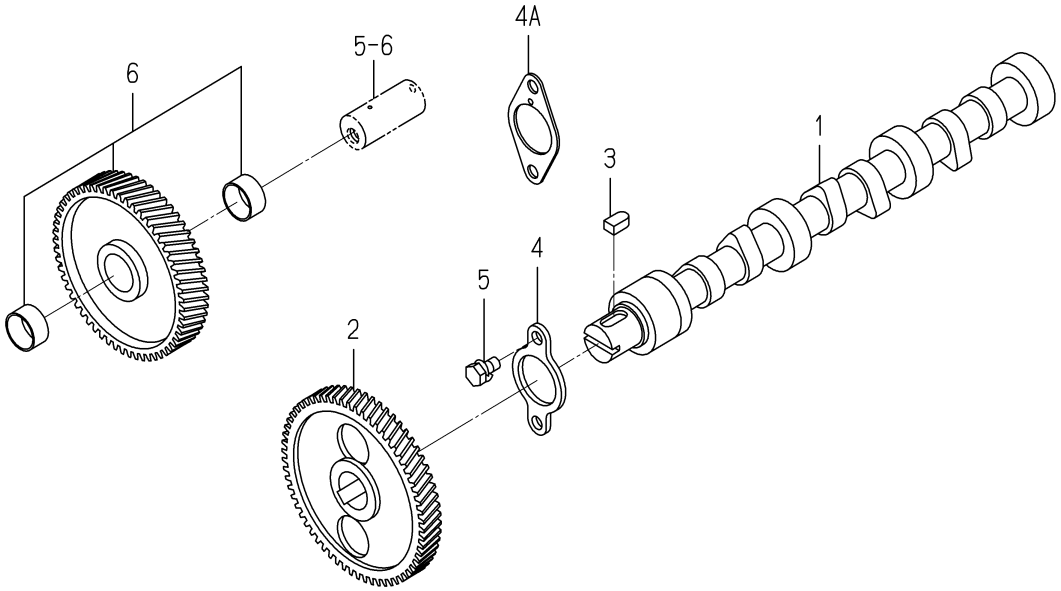

6003-310 -0100

KEY	PART CODE	DESCRIPTION	SPC	TYPE OF MODEL E3112 UP03		ITC	COL	GRP	REMARKS
1	6212-511-002-00	SHAFT,CAM	*	1					
2	6212-522-010-00	GEAR/CAMSHAFT	*	1					
3	6209-730-005-00	KEY/07X05X09	*	1					
4	6212-535-001-00	PLATE,THRUST	*	1 -392522					
4A	6212-535-014-00	PLATE/THRUST	*	1 392523-					
5	V210-560-601-20	BOLT,S/M6X12/7T	*	2					
6	6212-523-023-00	GEAR/IDLE ASSY	*	1					

FIG. 14 PISTON

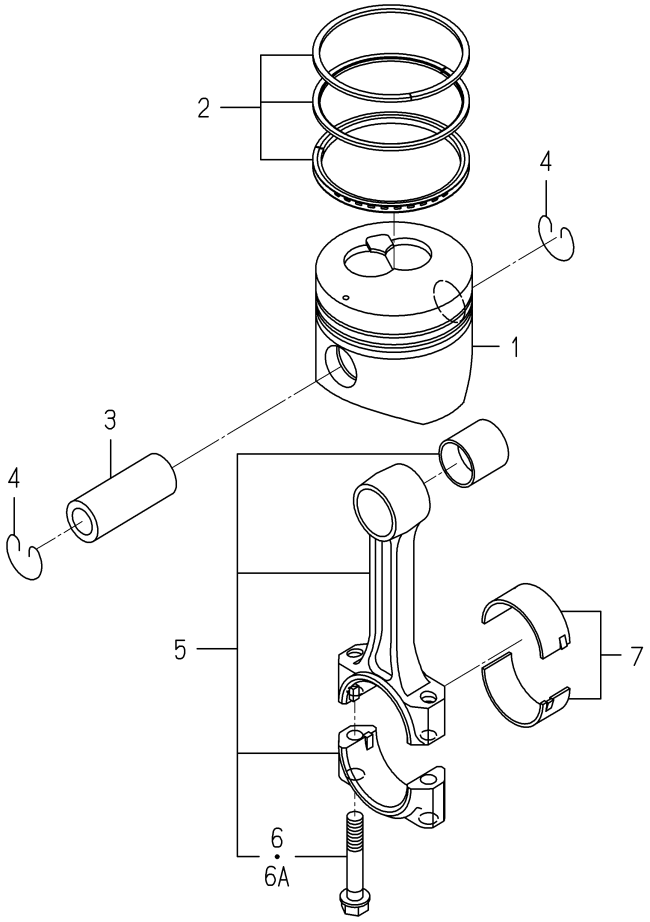

6004-340I-0100

KEY	PART CODE	DESCRIPTION	SPC	TYPE OF MODEL E3112 UP03		ITC	COL	GRP	REMARKS
1	6212-111-094-20	PISTON	*	3					
2	6212-121-014-20	RING/PISTON SET	*	3					
3	6212-211-001-10	PIN,PISTON	*	3					
4	6209-587-001-00	RING,SNAP	*	6					
5	6212-230-004-10	CONNECTINGROD ASSY	*	3					
6	6212-235-005-00	BOLT/CONNECTINGROD	*	6 -450320					
6A	6212-235-005-10	BOLT/CONNECTINGROD	*	6 450321-		1			
7	6212-271-016-00	BEARING/CONNECTING R	*	3					

FIG. 15 PISTON/OVER SIZE (OPTION)

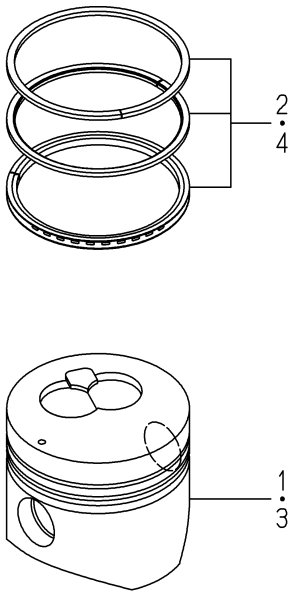

6004-349I-0100

KEY	PART CODE	DESCRIPTION	SPC	TYPE OF MODEL E3112 UP03		ITC	COL	GRP	REMARKS
1	6212-114-094-20	PISTON(OV/050)	T	3					
2	6212-124-014-10	RINGPISTON/OV050 SET	T	3					
3	6212-116-094-20	PISTON(OV/100)	T	3					
4	6212-126-014-10	RINGPISTON/OV100 SET	T	3					

FIG. 16 CRANK SHAFT

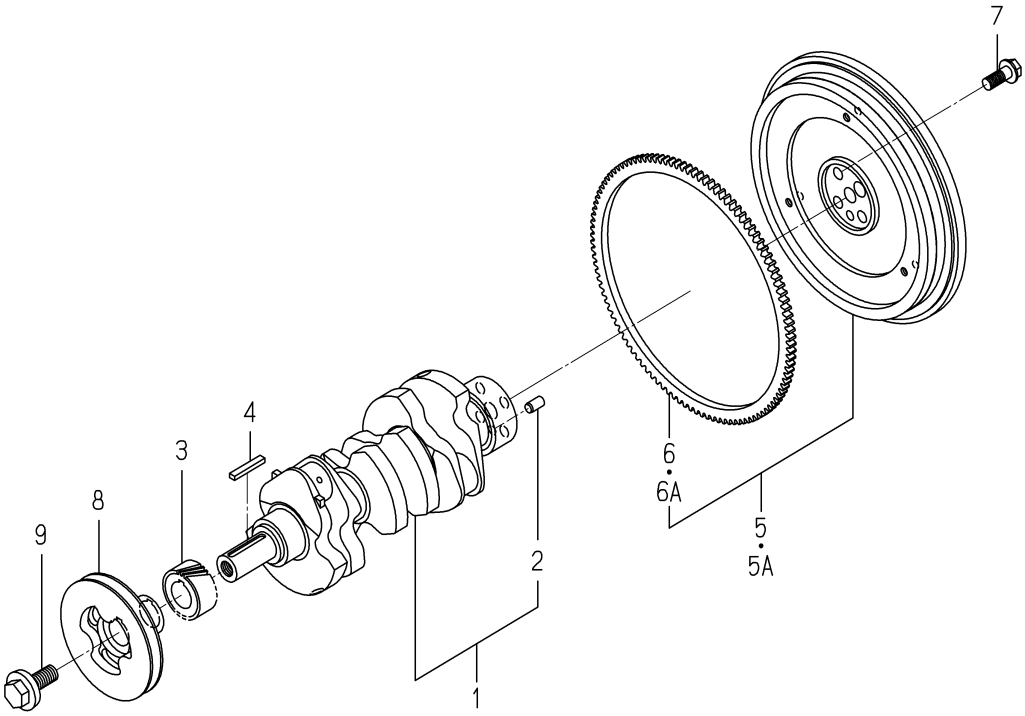

6004-351H-0100

KEY	PART CODE	DESCRIPTION	SPC	TYPE OF MODEL E3112 UP03		ITC	COL	GRP	REMARKS
1	6212-310-009-50	CRANKSHAFT ASSY	*	1					
2	V523-101-001-80	PIN,ST,B/10X18	*	1					
3	6212-521-008-00	GEAR/CRANK	*	1					
4	6209-730-006-00	KEY/07X05X43	*	1					
5	6212-330-095-10	FLYWHEEL ASSY	*	1 -408062					
5A	6212-330-095-20	FLYWHEEL ASSY	*	1 408063-		1			
6	6212-333-003-00	RINGGEAR	*	1 -407107					
6A	6212-333-009-00	RINGGEAR	*	1 407108-					
7	6209-046-015-00	BOLT/FLANGE	*	4					
8	6212-371-074-10	PULLEY/CRANK	*	1					
9	6209-000-043-00	BOLT/CRANK	*	1					

FIG. 17 OIL PUMP

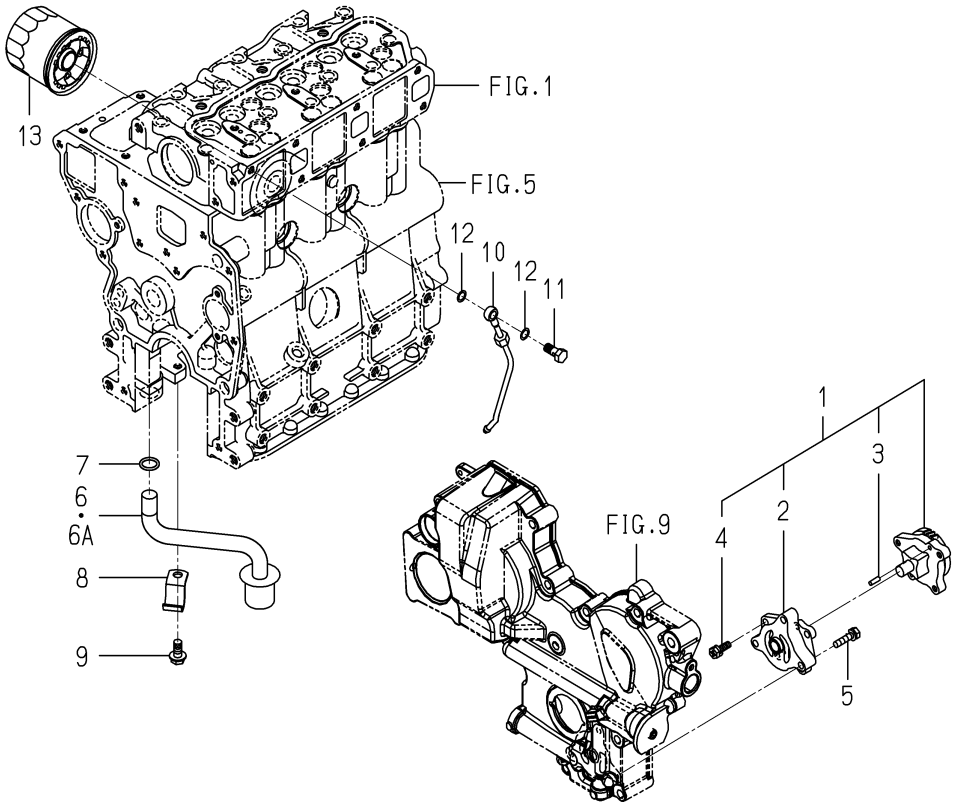

6004-401A-0100

KEY	PART CODE	DESCRIPTION	SPC	TYPE OF MODEL E3112 UP03		ITC	COL	GRP	REMARKS
1	6213-100-003-30	OILPUMP ASSY	*	1					
2	6213-111-001-30	BODY/OILPUMP	*	1					
3	6213-129-003-00	PIN/STRAIGHT	*	2					
4	6213-119-001-00	BOLT/WS	*	3					
5	V210-560-602-50	BOLT,S/M6X25/7T	*	3					
6	6213-140-032-00	STRAINER	*	1 -403680					
6A	6213-140-032-10	STRAINER	*	1 403681-		1			
7	V720-102-401-50	O-RING/1A,P15	*	1					
8	6213-149-001-00	CLAMP,STRAINER	*	1					
9	V231-360-801-60	FLANGEBOLT/M8X16	*	1					
10	6213-311-006-00	PIPE,OIL	*	1					
11	6909-906-105-10	BOLT,JOINT	*	1					
12	6209-920-002-00	PACKING	*	2					
13	6213-240-002-20	CARTRIDGE/OILFILTER	*	1					

FIG. 18 WATER PUMP

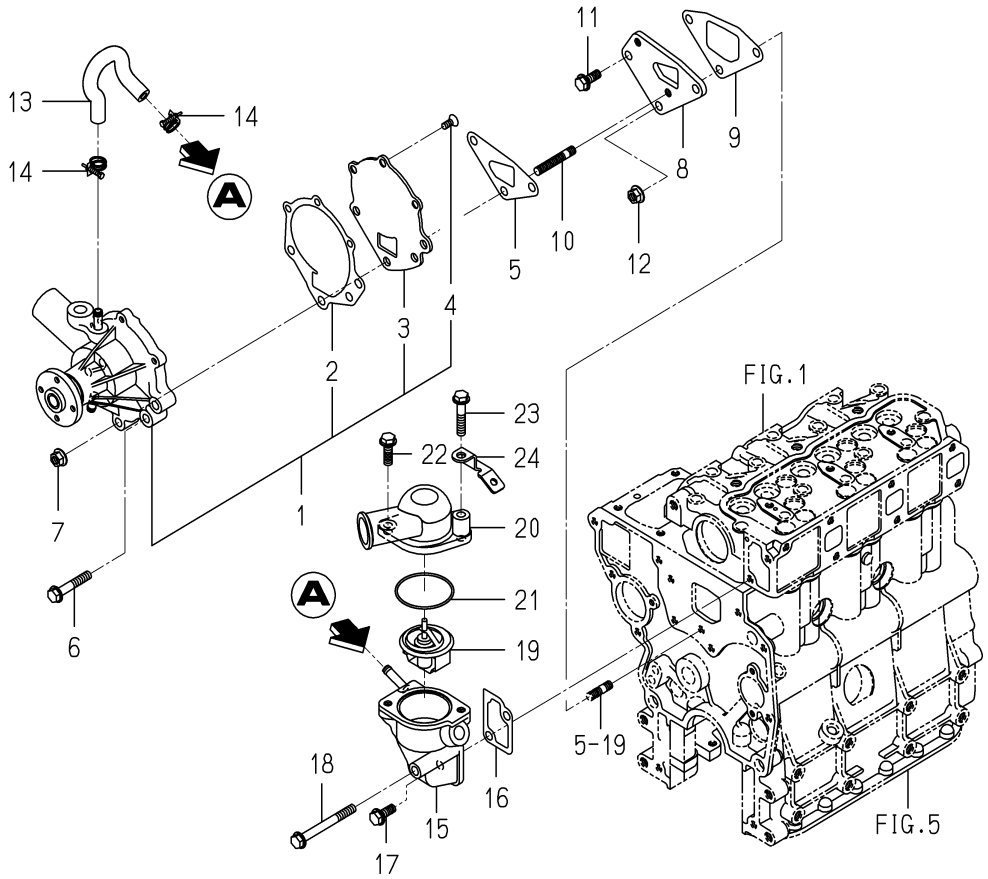

6004-420F-0100

KEY	PART CODE	DESCRIPTION	SPC	TYPE OF MODEL E3112 UP03		ITC	COL	GRP	REMARKS
1	6213-610-005-50	WATERPUMP ASSY	*	1 431133-					
2	6213-613-002-10	GASKET	*	1 431133-					
3	6213-612-004-00	PLATE/WATER PUMP	*	1 431133-					
4	6213-619-003-00	SCREW/WATER PUMP	*	3 431133-					
5	6213-614-018-00	GASKET/WATERPUMP	*	1 431133-					
6	V231-360-804-50	FLANGEBOLT/M8X45	*	1 431133-					
7	3817-401-001-00	NUT/M08	*	2 431133-					
8	6213-619-001-00	SPACER,PUMP.WATER	*	1 431133-					
9	6213-614-019-00	GASKET/SPACER	*	1 431133-					
10	6904-110-840-00	STUD/M8X40	*	2 431133-					
11	V231-360-802-00	FLANGEBOLT/M8X20	*	1 431133-					
12	3817-401-001-00	NUT/M08	*	1 431133-					
13	6213-729-013-10	HOSE/RUBBER	*	1 431133-					
14	J061-210-015-00	CLAMP/WIRE/10-15	*	2 431133-					
15	6213-716-001-60	HOUSING/THERMOSTAT	*	1 431133-					
16	6213-743-002-10	GASKET/HOUSING	*	1 431133-					
17	V231-360-802-00	FLANGEBOLT/M8X20	*	1 431133-					
18	V231-360-807-50	FLANGEBOLT/M8X75	*	1 431133-					
19	6513-770-022-10	THERMOSTAT	*	1 431133-					
20	6213-711-018-00	PIPE/WATEROUTLET	*	1 431133-					
21	V723-102-005-50	O-RING/1A,S55	*	1 431133-					
22	V231-360-802-50	FLANGEBOLT/M8X25	*	1 431133-					
23	V231-360-804-00	FLANGEBOLT/M8X40	*	1 431133-					
24	2213-101-018-00	GUIDE/HARNESS/A	*	1 431133-					

FIG. 19 WATER PUMP

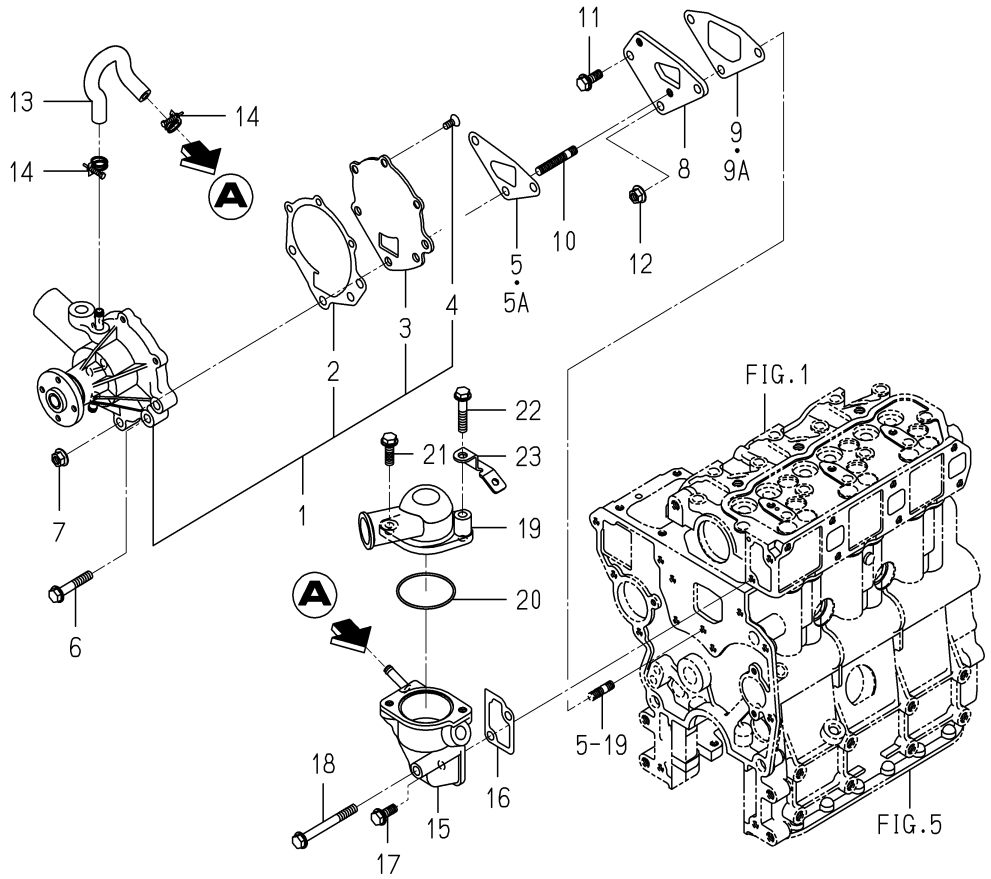

6004-420I-0100

KEY	PART CODE	DESCRIPTION	SPC	TYPE OF MODEL E3112 UP03		ITC	COL	GRP	REMARKS
1	6213-610-005-50	WATERPUMP ASSY	*	1 -431132					
2	6213-613-002-10	GASKET	*	1 -431132					
3	6213-612-004-00	PLATE/WATER PUMP	*	1 -431132					
4	6213-619-003-00	SCREW/WATER PUMP	*	3 -431132					
5	6213-614-003-10	GASKET/WATER PUMP	*	1 -429585					
5A	6213-614-018-00	GASKET/WATERPUMP	*	1 -431132					
6	V231-360-804-50	FLANGEBOLT/M8X45	*	1 -431132					
7	3817-401-001-00	NUT/M08	*	2 -431132					
8	6213-619-001-00	SPACER,PUMP.WATER	*	1 -431132					
9	6213-614-004-10	GASKET,SPACER	*	1 -429585					
9A	6213-614-019-00	GASKET/SPACER	*	1 -431132					
10	6904-110-840-00	STUD/M8X40	*	2 -431132					
11	V231-360-802-00	FLANGEBOLT/M8X20	*	1 -431132					
12	3817-401-001-00	NUT/M08	*	1 -431132					
13	6213-729-013-10	HOSE/RUBBER	*	1 -431132					
14	J061-210-015-00	CLAMP/WIRE/10-15	*	2 -431132					
15	6213-716-001-60	HOUSING/THERMOSTAT	*	1 -431132					
16	6213-743-002-10	GASKET/HOUSING	*	1 -431132					
17	V231-360-802-00	FLANGEBOLT/M8X20	*	1 -431132					
18	V231-360-807-50	FLANGEBOLT/M8X75	*	1 -431132					
19	6213-711-018-00	PIPE/WATEROUTLET	*	1 -431132					
20	V723-102-005-50	O-RING/1A,S55	*	1 -431132					
21	V231-360-802-50	FLANGEBOLT/M8X25	*	1 -431132					
22	V231-360-804-00	FLANGEBOLT/M8X40	*	1 -431132					
23	2213-101-018-00	GUIDE/HARNESS/A	*	1 -431132					

FIG. 20 COOLING FAN

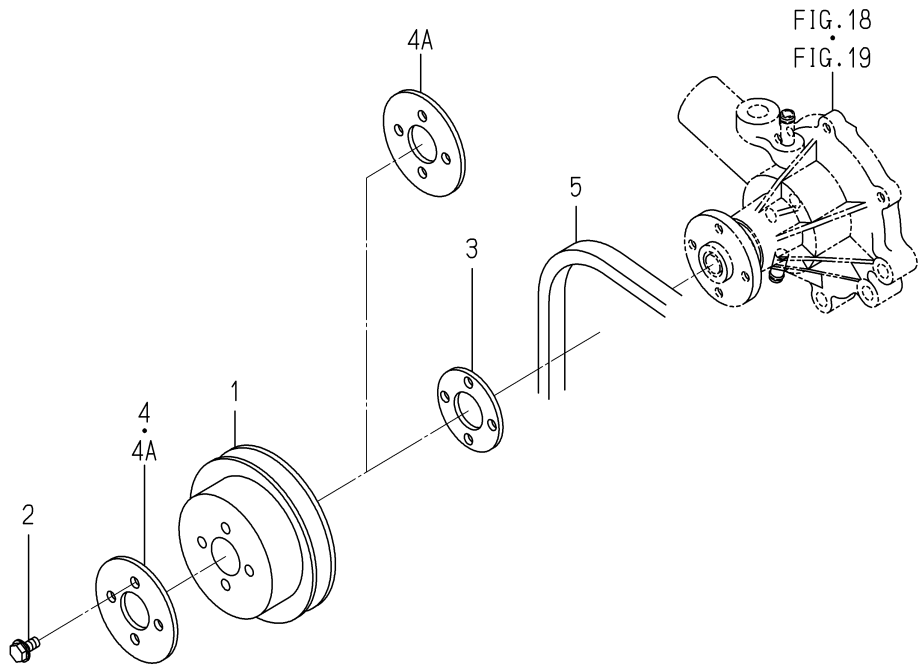

6004-480Y-0100

KEY	PART CODE	DESCRIPTION	SPC	TYPE OF MODEL E3112 UP03		ITC	COL	GRP	REMARKS
1	6213-641-022-20	PULLEY/WATERPUMP	*	1					
2	V230-360-601-60	FLANGEBOLT/M6X16	*	4					
3	6213-669-021-00	SPACER/FAN	*	1 -421706					
4	6213-669-022-00	SPACER/FAN	*	1 -421706					
4A	6213-669-022-00	SPACER/FAN	*	2 421707-					
5	6213-671-053-00	BELT/VNR5A36.0	*	1					

FIG. 21 INJECTION NOZZLE

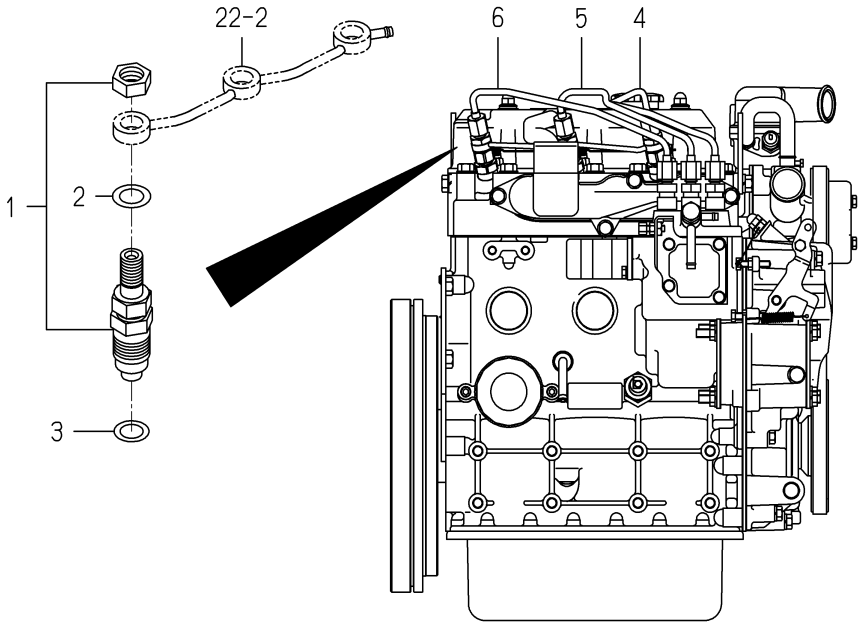

6004-501C-0100

KEY	PART CODE	DESCRIPTION	SPC	TYPE OF MODEL E3112 UP03		ITC	COL	GRP	REMARKS
1	6215-300-036-10	INJECTIONNOZZLE ASSY	*	3					FIG 028
2	6215-359-001-00	WASHER	*	3					
3	6215-315-002-00	GASKET,NOZZLE	*	3					
4	6215-411-126-10	PIPE/INJECTION ASSY	*	1					
5	6215-411-127-00	PIPE/INJECTION ASSY	*	1					
6	6215-411-128-00	PIPE/INJECTION ASSY	*	1					

FIG. 22 INJECTION PUMP

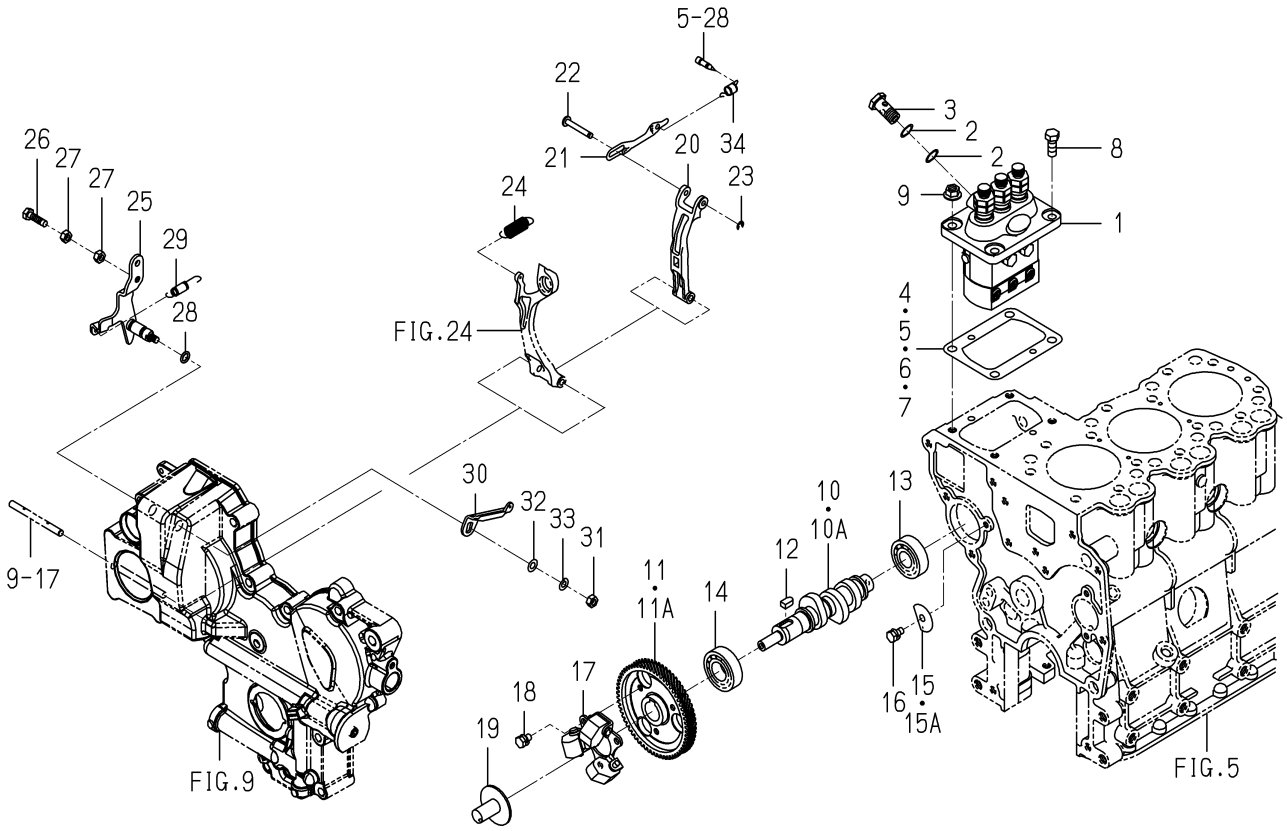

6004-511Q-0100

KEY	PART CODE	DESCRIPTION	SPC	TYPE OF MODEL E3112 UP03		ITC	COL	GRP	REMARKS
1	6215-600-156-20	INJECTIONPUMP ASSY	*	1					FIG 029
2	6215-619-010-00	WASHER/AIR BLEEDER	*	2					
3	6215-619-009-00	SCREW/HOLLOW	*	1					
4	6219-752-045-00	SHIM/INJECTIONPUMP	*	1					
5	6219-752-044-00	SHIM/INJECTIONPUMP	*	1					
6	6219-752-046-00	SHIM/INJECTIONPUMP	*	1					
7	6219-752-047-00	SHIM/INJECTIONPUMP	*	1					
8	V201-360-802-00	BOLT/M8X20/7T	*	2					
9	3817-401-001-00	NUT/M08	*	2					
10	6215-621-016-20	CAMSHAFT/INJECTION P	*	1 -413327					
10A	6215-621-016-30	CAMSHAFT/INJECTION P	*	1 413328-		3			
11	6212-524-002-30	GEAR/INJECTIONPUMP	*	1 -413327					
11A	6212-524-002-40	GEAR/INJECTIONPUMP	*	1 413328-		3			
12	6209-730-005-00	KEY/07X05X09	*	1					
13	V600-110-620-30	BEARING,RB/6203	*	1					
14	1729-202-001-00	BEARING/BALL	*	1					
15	6212-535-002-00	PLATE,THRUST INJPUMP	*	1 -406030					
15A	6212-535-010-10	PLATE/THRUST/INJECTI	*	1 406031-					
16	V210-560-601-20	BOLT,S/M6X12/7T	*	1					
17	6215-520-001-00	FLYWEIGHT	*	1					
18	6209-030-043-00	BOLT/M6X10	*	3					
19	6215-526-004-00	THRUSTPIECE	*	1					
20	6215-541-001-10	ARM/FLOATING COMP	*	1					
21	6215-543-002-10	RINK/CONTROL	*	1					
22	6215-542-006-00	PIN,CONTROL	*	1					
23	V710-140-004-00	RING,SNAP/4 E	*	1					
24	6215-531-025-00	SPRING/GOVERNOR	*	1					
25	6215-541-012-20	LEVER(CONTROL) COMP	*	1					
26	6209-044-001-00	BOLT/M6X18	*	1					
27	V302-260-006-00	NUT/M6	*	2					

FIG. 22 INJECTION PUMP

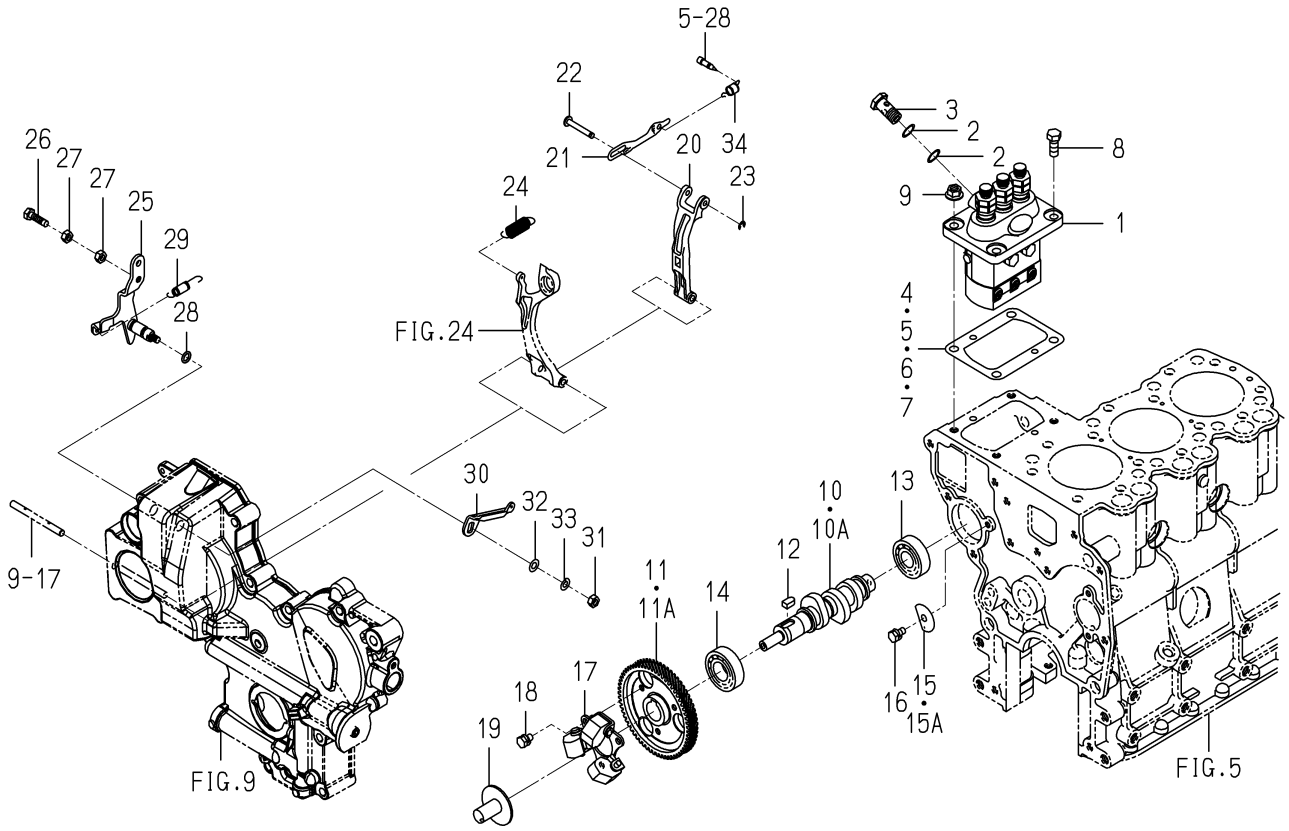

6004-511Q-0100

KEY	PART CODE	DESCRIPTION	SPC	TYPE OF MODEL E3112 UP03		ITC	COL	GRP	REMARKS
28	V720-101-900-80	O-RING/1A,P8	*	1					
29	6209-580-002-10	SPRING,RETURN	*	1					
30	6215-549-007-10	ARM/CONTROL	*	1					
31	V301-260-006-00	NUT/M6	*	1					
32	V411-260-006-00	WASHER,PL/M6	*	1					
33	V401-160-006-00	WASHER,SP/M6	*	1					
34	6215-549-012-00	SPRING,STARTING	*	1					

FIG. 23 FUEL PIPE

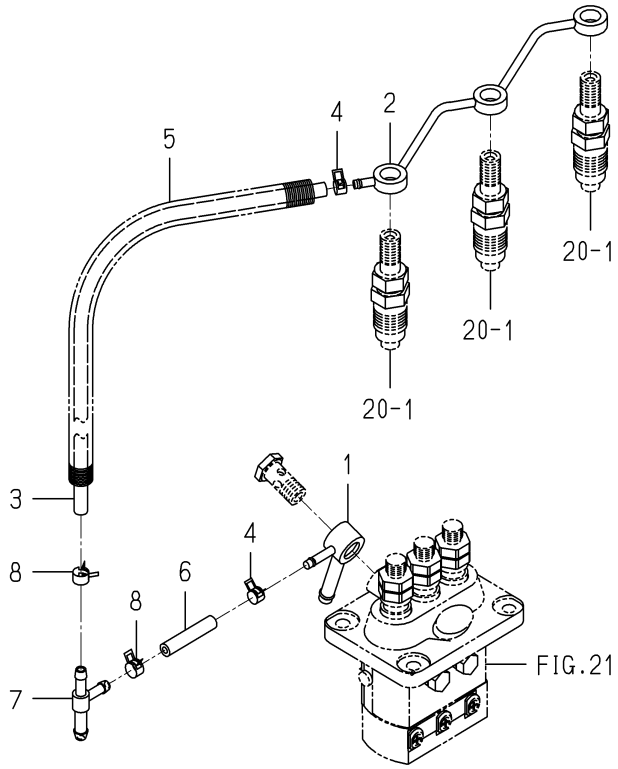

6004-550N-0100

KEY	PART CODE	DESCRIPTION	SPC	TYPE OF MODEL E3112 UP03		ITC	COL	GRP	REMARKS
1	6215-412-004-00	CONNECTOR/FUEL	*	1					
2	6215-411-125-00	PIPE/FUEL	*	1					
3	6209-360-018-00	HOSE/RUBBER/160	*	1					
4	J062-076-082-00	CLIP/HOSE/7.6-8.2	*	2					
5	6209-360-143-00	CORRUGATEDTUBE	*	1					
6	6209-360-006-00	HOSE,RUBBER	*	1					
7	3643-586-001-00	JOINTT-TYPE	*	1					
8	J062-087-093-00	CLIP/HOSE/8.7-9.3	*	2					

FIG. 24 ADAPTER

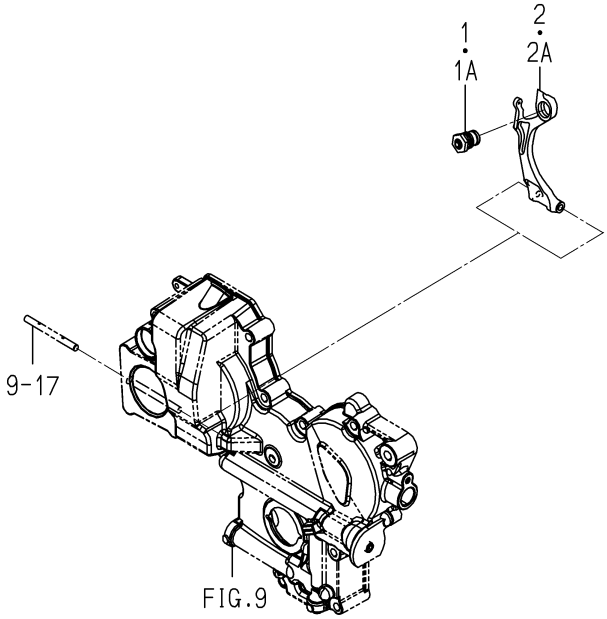

6004-560Q-0100

KEY	PART CODE	DESCRIPTION	SPC	TYPE OF MODEL E3112 UP03		ITC	COL	GRP	REMARKS
1	6215-548-082-10	ADAPTER/320X080 ASSY	*	1 -385796					
1A	6215-548-082-20	ADAPTER/320X080 ASSY	*	1 385797-		1			
2	6215-541-016-40	ARM/TENSION	*	1 -435736					
2A	6215-541-016-50	ARM/TENSION	*	1 435737-		1			

FIG. 25 ELECTRIC (1)

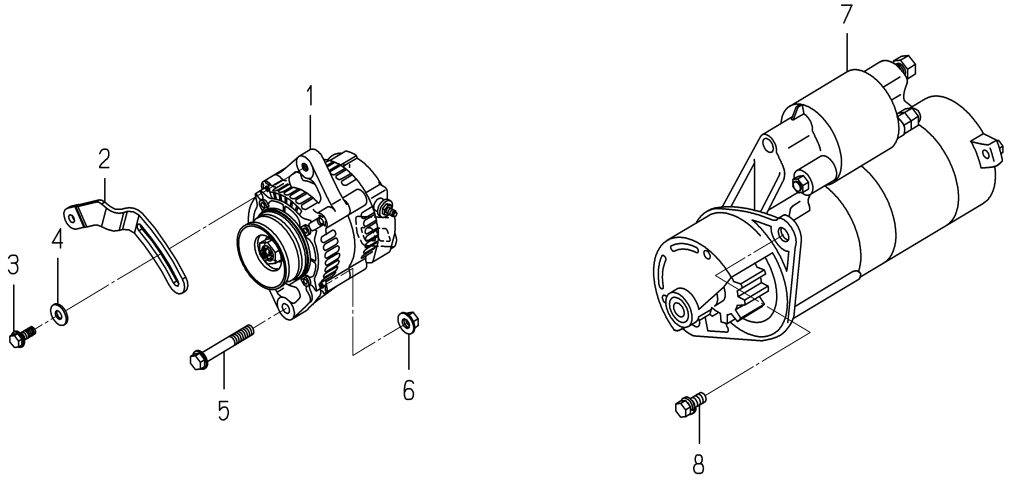

6004-801T-0100,6004-801T-0200

KEY	PART CODE	DESCRIPTION	SPC	TYPE OF MODEL E3112 UP03		ITC	COL	GRP	REMARKS
1	2182-104-520-00	GENERATOR ASSY	*	1					
2	6213-674-046-00	PLATE/ADJUST	*	1					
3	V231-360-802-00	FLANGEBOLT/M8X20	*	1					
4	1373-121-001-00	WASHER/9X22X2	*	1					
5	V233-361-007-00	FLANGEBOLT/M10X70	*	1					
6	6209-440-007-00	NUT/FLANGE/M10	*	1					
7	6281-100-014-00	STARTER ASSY	*	1					FIG 030
8	6901-911-025-00	BOLT,SEMS/M10X25,7T	*	2					

FIG. 26 ELECTRIC (2)

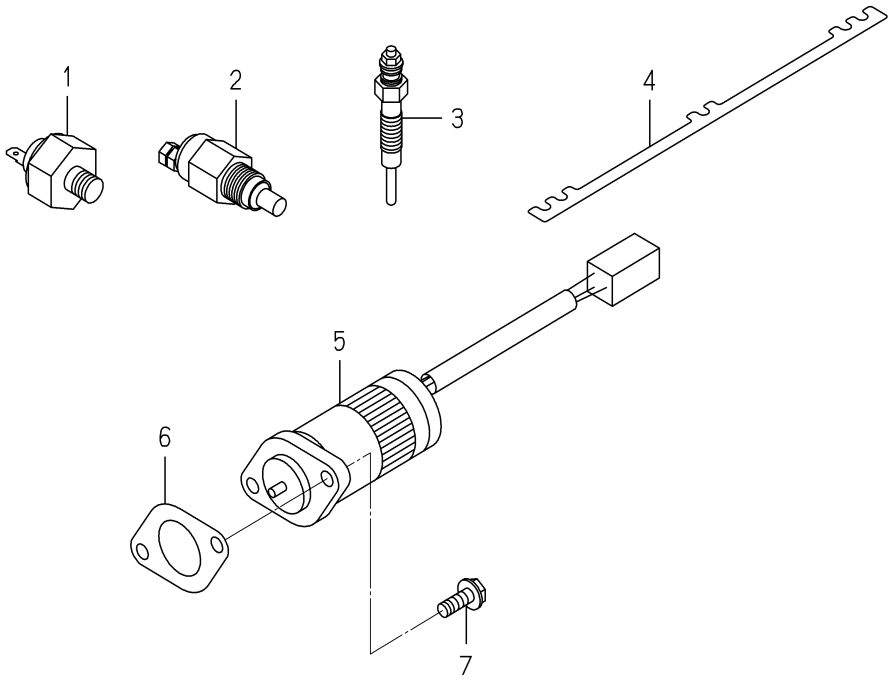

6004-821D-0100,6004-821D-0200

KEY	PART CODE	DESCRIPTION	SPC	TYPE OF MODEL E3112 UP03		ITC	COL	GRP	REMARKS
1	6281-971-001-10	SWITCH/OILPRESSURE	*	1					
2	6282-450-008-00	SWITCH/OVERHEAT	*	1					
3	6281-410-026-10	GLOWPLUG	*	3					
4	6219-732-017-00	CONNECTOR/GLOWPLUG	*	1					
5	6281-910-013-00	SOLENOID	*	1					
6	6209-630-002-10	GASKET	*	1					
7	V230-360-601-60	FLANGEBOLT/M6X16	*	2					

FIG. 27 REPAIR PARTS(OPTION)

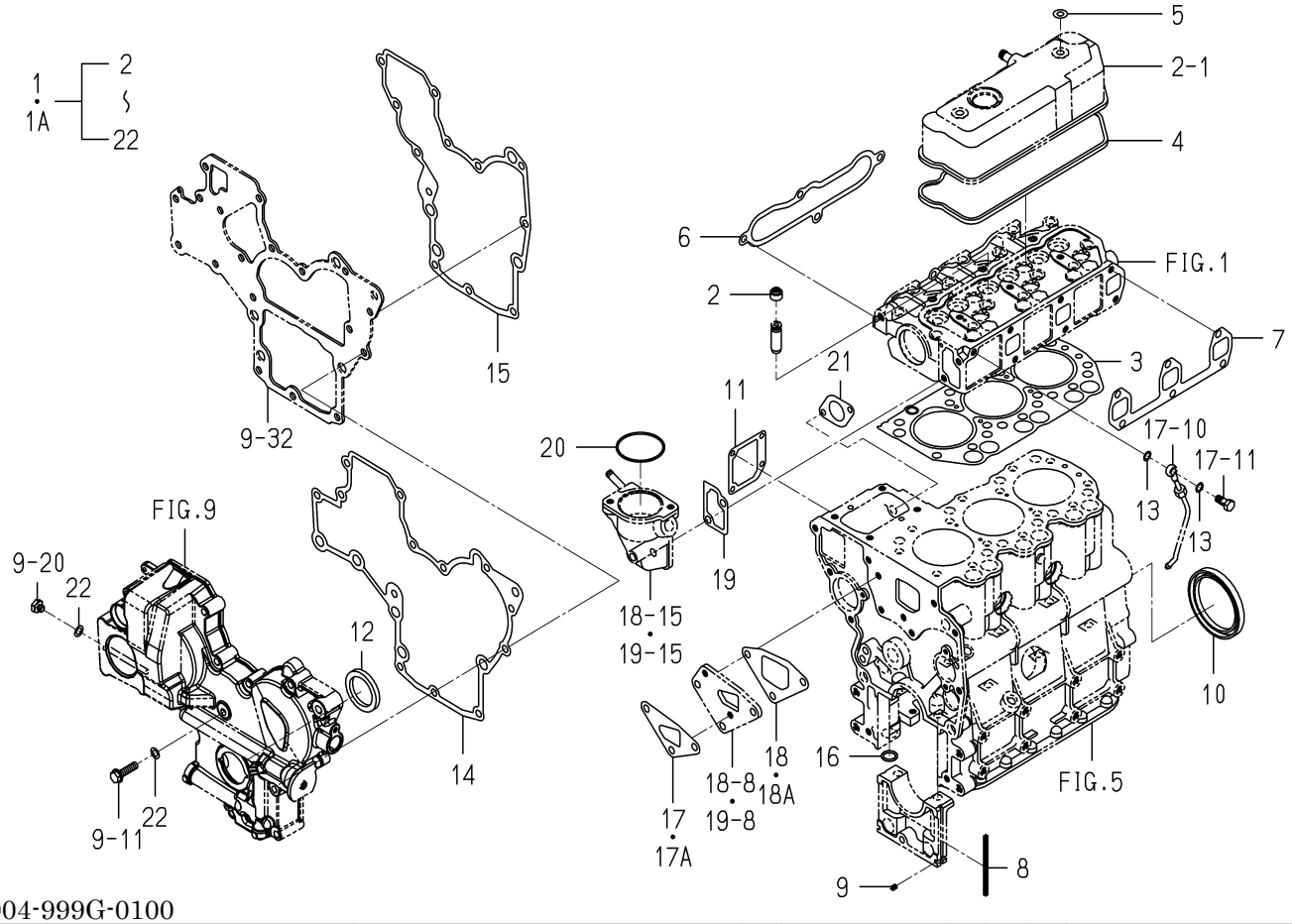

6004-999G-0100

KEY	PART CODE	DESCRIPTION	SPC	TYPE OF MODEL E3112 UP03		ITC	COL	GRP	REMARKS
1	6287-810-035-00	REPAIR/ENGINE SET	T	1 -429585					
1A	6287-810-035-10	REPAIR/ENGINE SET	T	1 429586-		1			
2	6212-569-002-00	SEAL,OIL	T	6					
3	6211-141-029-20	GASKET/CYLINDERHEAD	T	1					
4	6211-173-003-00	SEAL,CYL.HEAD COVER	T	1					
5	6209-572-003-00	GASKET	T	2					
6	6214-115-001-20	GASKET,INLET MANIFOL	T	1					
7	6214-145-001-30	GASKET,EXH.MANIFOLD	T	1					
8	6211-258-001-00	SEAL,BEARING CAP	T	4					
9	6211-258-002-00	SEAL,BEARING CAP/7	T	2					
10	6209-625-001-00	SEAL,OIL	T	1					
11	6211-292-001-20	GASKET/COVER	T	1					
12	6209-625-002-00	SEAL,OIL	T	1					
13	6209-920-002-00	PACKING	T	2					
14	6211-312-003-20	GASKET/GEARCASE	T	1					
15	6211-312-004-20	GASKET/PLATE	T	1					
16	V720-102-401-50	O-RING/1A,P15	T	1					
17	6213-614-003-10	GASKET/WATER PUMP	T	1 -429585					
17A	6213-614-018-00	GASKET/WATERPUMP	T	1 429586-					
18	6213-614-004-10	GASKET,SPACER	T	1 -429585					
18A	6213-614-019-00	GASKET/SPACER	T	1 429586-					
19	6213-743-002-10	GASKET/HOUSING	T	1					
20	V723-102-005-50	O-RING/1A,S55	T	1					
21	6209-630-002-10	GASKET	T	1					
22	6209-500-003-00	WASHER/08X14X01	T	2					

FIG. 28 COMPONENT PARTS FOR 6215-300-036-10 ON Fig.021

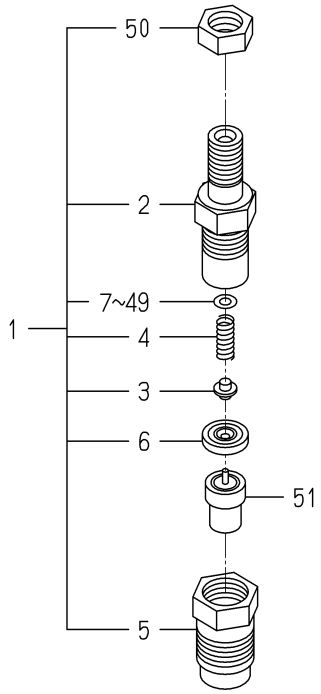

6215-300-036-1B

KEY	PART CODE	DESCRIPTION	SPC	TYPE OF MODEL E3112 UP03		ITC	COL	GRP	REMARKS
1	6215-330-024-10	HOLDER/NOZZLE ASSY	*	3					
2	6215-331-008-00	BODY/NOZZLE HOLDER	*	3					
3	6215-342-001-00	PIN,NOZZLE HOLDER	*	3					
4	6215-343-001-00	SPRING/NOZZLEHOLDER	*	3					
5	6215-332-013-00	NUT/NOZZLERETAINING	*	3					
6	6215-339-001-00	PIECE,DISTANCE	*	3					
7	6215-345-001-00	WASHER/0.9	*	3					
8	6215-345-002-00	WASHER/0.925	*	3					
9	6215-345-003-00	WASHER/0.95	*	3					
10	6215-345-004-00	WASHER/0.975	*	3					
11	6215-345-005-00	WASHER/1.0	*	3					
12	6215-345-006-00	WASHER/1.025	*	3					
13	6215-345-007-00	WASHER/1.05	*	3					
14	6215-345-008-00	WASHER/1.075	*	3					
15	6215-345-009-00	WASHER/1.1	*	3					
16	6215-345-010-00	WASHER/1.125	*	3					
17	6215-345-011-00	WASHER/1.15	*	3					
18	6215-345-012-00	WASHER/1.175	*	3					
19	6215-345-013-00	WASHER/1.2	*	3					
20	6215-345-014-00	WASHER/1.225	*	3					
21	6215-345-015-00	WASHER/1.25	*	3					
22	6215-345-016-00	WASHER/1.275	*	3					
23	6215-345-017-00	WASHER/1.3	*	3					
24	6215-345-018-00	WASHER/1.325	*	3					
25	6215-345-019-00	WASHER/1.35	*	3					
26	6215-345-020-00	WASHER/1.375	*	3					
27	6215-345-021-00	WASHER/1.4	*	3					
28	6215-345-022-00	WASHER/1.425	*	3					
29	6215-345-023-00	WASHER/1.45	*	3					
30	6215-345-024-00	WASHER/1.475	*	3					

FIG. 28 COMPONENT PARTS FOR 6215-300-036-10 ON Fig.021

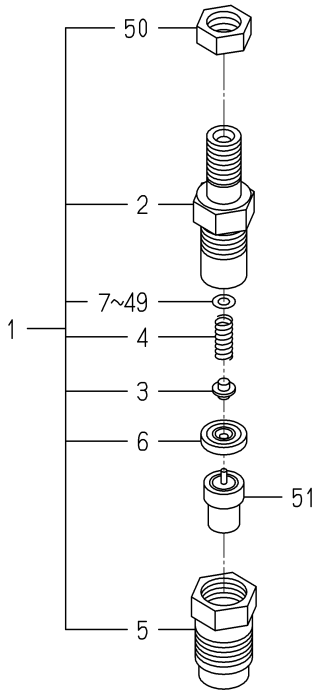

6215-300-036-1B

KEY	PART CODE	DESCRIPTION	SPC	TYPE OF MODEL E3112 UP03		ITC	COL	GRP	REMARKS
31	6215-345-025-00	WASHER/1.5	*	3					
32	6215-345-026-00	WASHER/1.525	*	3					
33	6215-345-027-00	WASHER/1.55	*	3					
34	6215-345-028-00	WASHER/1.575	*	3					
35	6215-345-029-00	WASHER/1.6	*	3					
36	6215-345-030-00	WASHER/1.625	*	3					
37	6215-345-031-00	WASHER/1.65	*	3					
38	6215-345-032-00	WASHER/1.675	*	3					
39	6215-345-033-00	WASHER/1.7	*	3					
40	6215-345-034-00	WASHER/1.725	*	3					
41	6215-345-035-00	WASHER/1.75	*	3					
42	6215-345-036-00	WASHER/1.775	*	3					
43	6215-345-037-00	WASHER/1.8	*	3					
44	6215-345-038-00	WASHER/1.825	*	3					
45	6215-345-039-00	WASHER/1.85	*	3					
46	6215-345-040-00	WASHER/1.875	*	3					
47	6215-345-041-00	WASHER/1.9	*	3					
48	6215-345-042-00	WASHER/1.925	*	3					
49	6215-345-043-00	WASHER/1.95	*	3					
50	6215-359-002-00	NUT	*	3					
51	6215-311-027-00	NOZZLE ASSY	*	3					

FIG. 29 COMPONENT PARTS FOR 6215-600-156-20 ON Fig.022

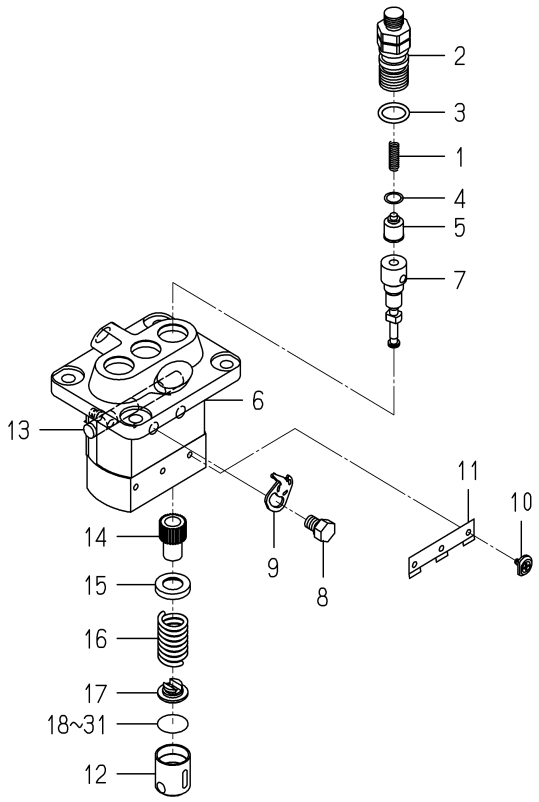

6215-600-156-2E

KEY	PART CODE	DESCRIPTION	SPC	TYPE OF MODEL E3112 UP03		ITC	COL	GRP	REMARKS
1	6215-643-006-00	SPRING/DELIVERYVALVE	*	3					
2	6215-644-007-00	HOLDER/DELIVERYVALVE	*	3					
3	6215-649-019-00	ORING	*	3					
4	6215-649-002-00	GASKET/DELIVERYVALVE	*	3					
5	6215-641-006-00	VALVE ASSY	*	3					
6	6215-611-001-00	HOUSING ASSY	*	1					
7	6215-631-035-00	ELEMENT ASSY	*	3					
8	6215-619-022-00	BOLT/WASHERHEAD	*	2					
9	6215-612-001-00	PLATE/ADJUSTING	*	2					
10	6215-629-001-00	PIN/INJECTIONPUMP	*	3					
11	6215-629-002-00	PLATE	*	1					
12	6215-622-001-00	TAPPET/INJECTIO ASSY	*	3					
13	6215-637-001-00	RACK/CONTROL ASSY	*	1					
14	6215-635-001-00	SLEEVE/PLUNGER	*	3					
15	6215-639-004-00	SEAT/SPRING/UPPER	*	3					
16	6215-634-001-00	SPRING/PUMPPLUNGER	*	3					
17	6215-639-005-00	SEAT/SPRING/LOWER	*	3					
18	6215-629-003-00	PLATE/TAPPET/AD 0.6	*	1					
19	6215-629-004-00	PLATE/TAPPET/AD 0.7	*	1					
20	6215-629-005-00	PLATE/TAPPET/AD 0.8	*	1					
21	6215-629-006-00	PLATE/TAPPET/AD 0.9	*	1					
22	6215-629-007-00	PLATE/TAPPET/AD 1.0	*	1					
23	6215-629-008-00	PLATE/TAPPET/AD 0.2	*	1					
24	6215-629-009-00	PLATE/TAPPET/AD 0.3	*	1					
25	6215-629-010-00	PLATE/TAPPET/AD 0.4	*	1					
26	6215-629-011-00	PLATE/TAPPET/AD 0.5	*	3					
27	6215-629-012-00	PLATE/TAPPET/AD 0.25	*	1					
28	6215-629-013-00	PLATE/TAPPET/AD 0.35	*	1					
29	6215-629-014-00	PLATE/TAPPET/AD 0.45	*	1					
30	6215-629-015-00	PLATE/TAPPET/AD 0.55	*	1					

FIG. 29 COMPONENT PARTS FOR 6215-600-156-20 ON Fig.022

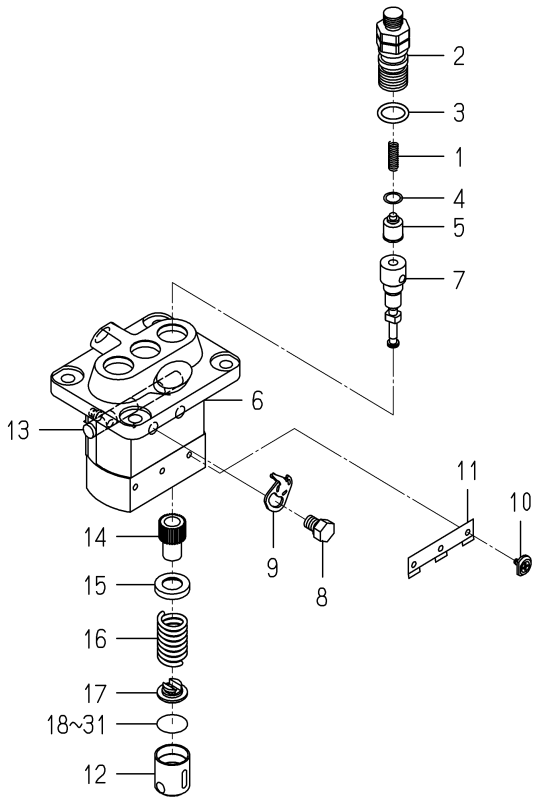

6215-600-156-2E

KEY	PART CODE	DESCRIPTION	SPC	TYPE OF MODEL E3112 UP03		ITC	COL	GRP	REMARKS
31	6215-629-016-00	PLATE/TAPPET/AD 0.65	*	1					

FIG. 30 COMPONENT PARTS FOR 6281-100-014-00 ON Fig.025

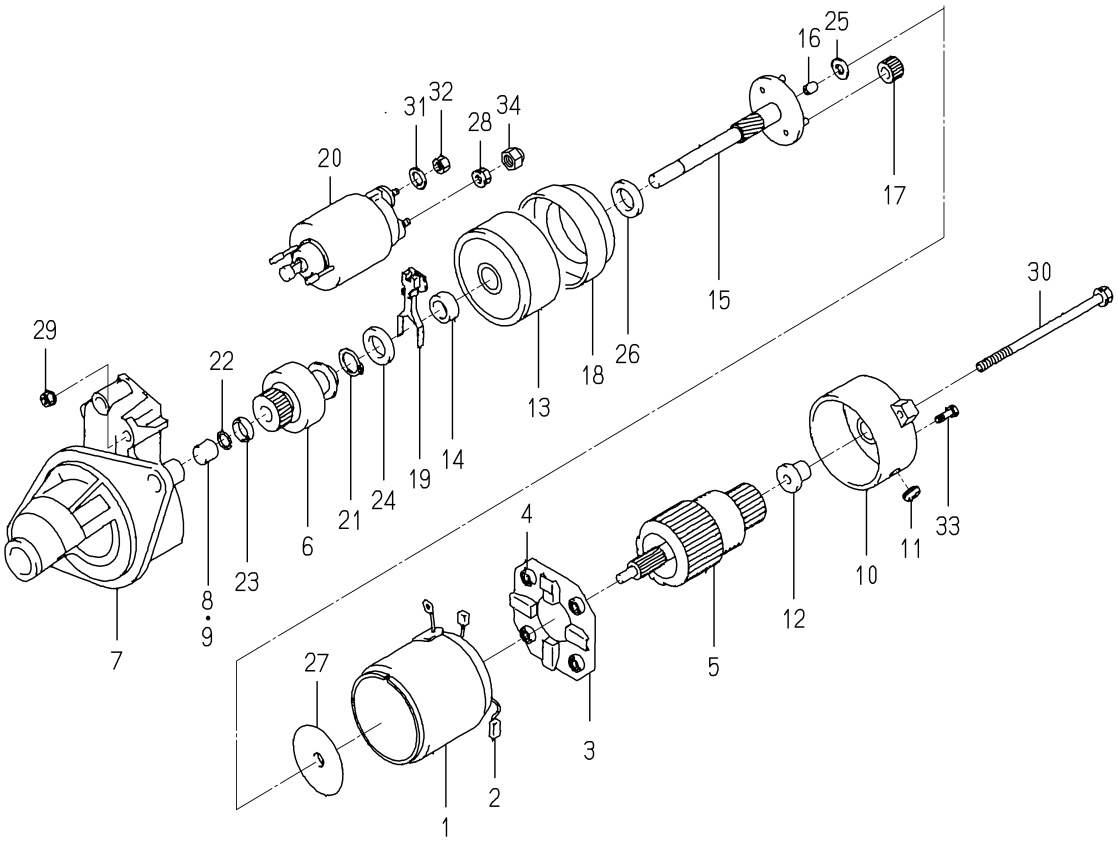

6281-100-014-0A

KEY	PART CODE	DESCRIPTION	SPC	TYPE OF MODEL E3112 UP03		ITC	COL	GRP	REMARKS
1	6281-111-009-00	YOKE/STARTER ASSY	*	1					
2	6281-119-009-00	BRUSH/STARTER	*	2					
3	6281-118-007-00	HOLDER/STARTER ASSY	*	1					
4	6281-117-003-00	SPRING/STARTERBRUSH	*	4					
5	6281-121-010-00	ARMATURE/STARTE ASSY	*	1					
6	6281-124-011-00	CLUTCH/STARTER ASSY	*	1					
7	6281-129-064-00	HOUSING/STARTER ASSY	*	1					
8	6281-129-080-00	BEARING/NEEDLE	*	1					
9	6281-129-058-00	BEARING/NEEDLE	*	1					
10	6281-115-017-00	FRAME/COMMUTATOR END	*	1					
11	6281-115-018-00	COVER	*	1					
12	6281-129-065-00	BEARING/OILLESS	*	1					
13	6281-129-066-00	BEARING/WITH SHOCKAB	*	1					
14	6281-129-067-00	BEARING/OILLESS	*	1					
15	6281-129-068-00	SHAFT/STARTER PLANET	*	1					
16	6281-129-069-00	BEARING/OILLESS	*	1					
17	6281-129-070-00	GEAR/STARTER PLANETA	*	3					
18	6281-129-071-00	GEAR/STARTERINTERNAL	*	1					
19	6281-127-003-00	LEVER/PINIONDRIVE	*	1					
20	6281-151-014-00	SWITCH/MAGNETIC ASSY	*	1					
21	6281-129-072-00	RING/SNAP	*	1					
22	6281-129-073-00	RING/SNAP	*	1					
23	6281-129-074-00	NUT/PINIONSTOP	*	1					
24	6281-129-075-00	WASHER/SK	*	1					
25	6281-129-076-00	WASHER/SK	*	1					
26	6281-129-077-00	WASHER/SK	*	1					
27	6281-129-078-00	PLATE	*	1					
28	6281-129-030-00	NUT	*	1					
29	6281-129-029-00	NUT	*	2					
30	6281-129-043-00	BOLT/THROUGH	*	2					

FIG. 30 COMPONENT PARTS FOR 6281-100-014-00 ON Fig.025

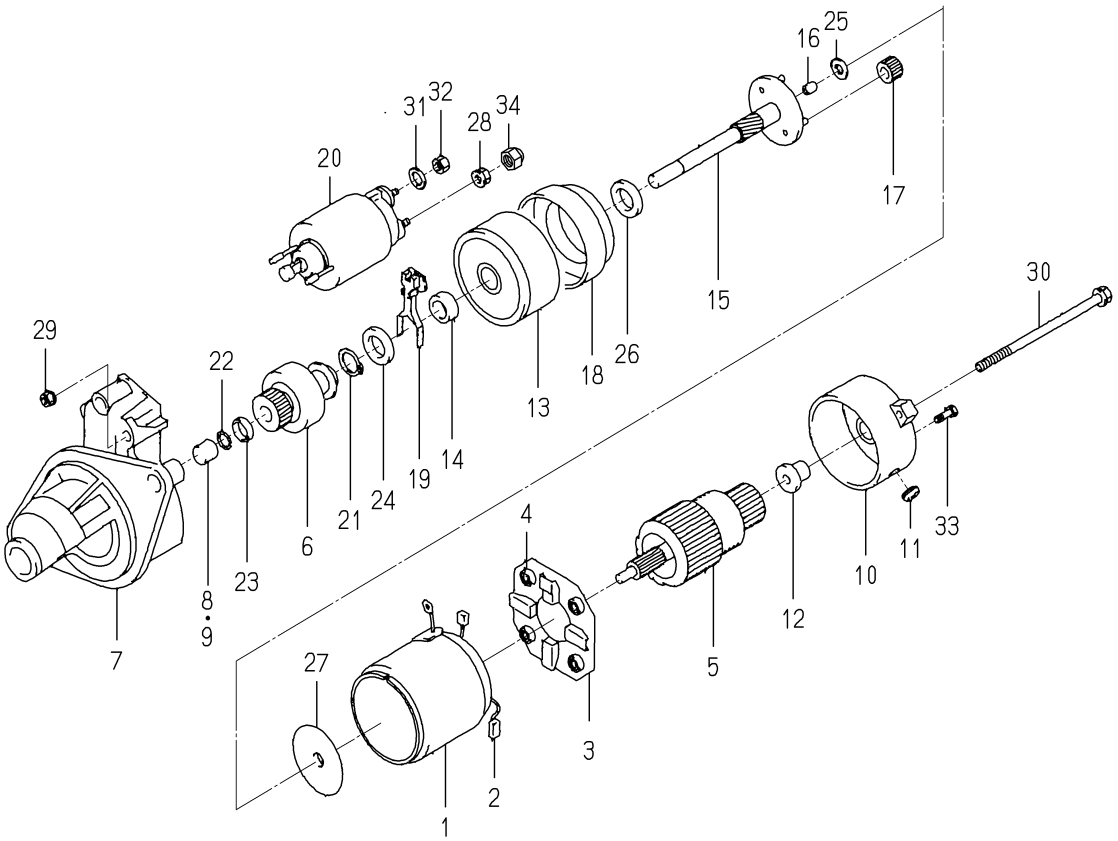

6281-100-014-0A

KEY	PART CODE	DESCRIPTION	SPC	TYPE OF MODEL E3112 UP03		ITC	COL	GRP	REMARKS
31	6909-150-508-00	WASHER	*	1					
32	6909-110-408-00	NUT/M8	*	1					
33	6281-129-062-00	SCREW	*	2					
34	6281-129-079-00	NUT	*	1					

C H A S S I S

FIG. 1 MUFFLER SYSTEM(G TYPE)

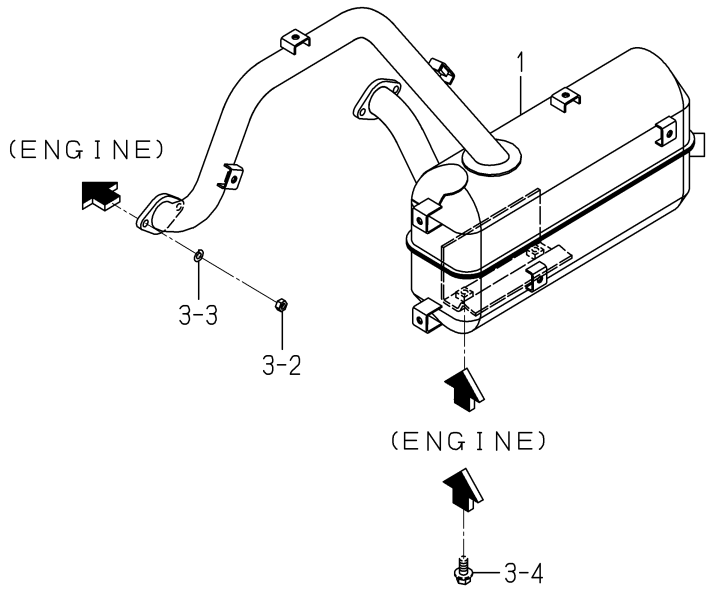

2232-101 -0100

KEY	PART CODE	DESCRIPTION	SPC	TYPE OF MODEL		ITC	COL	GRP	REMARKS
				NP60E16					
1	2204-101-950-00	MUFFLER/FD620 COMP	*	1					

FIG. 2 MUFFLER SYSTEM(D TYPE)

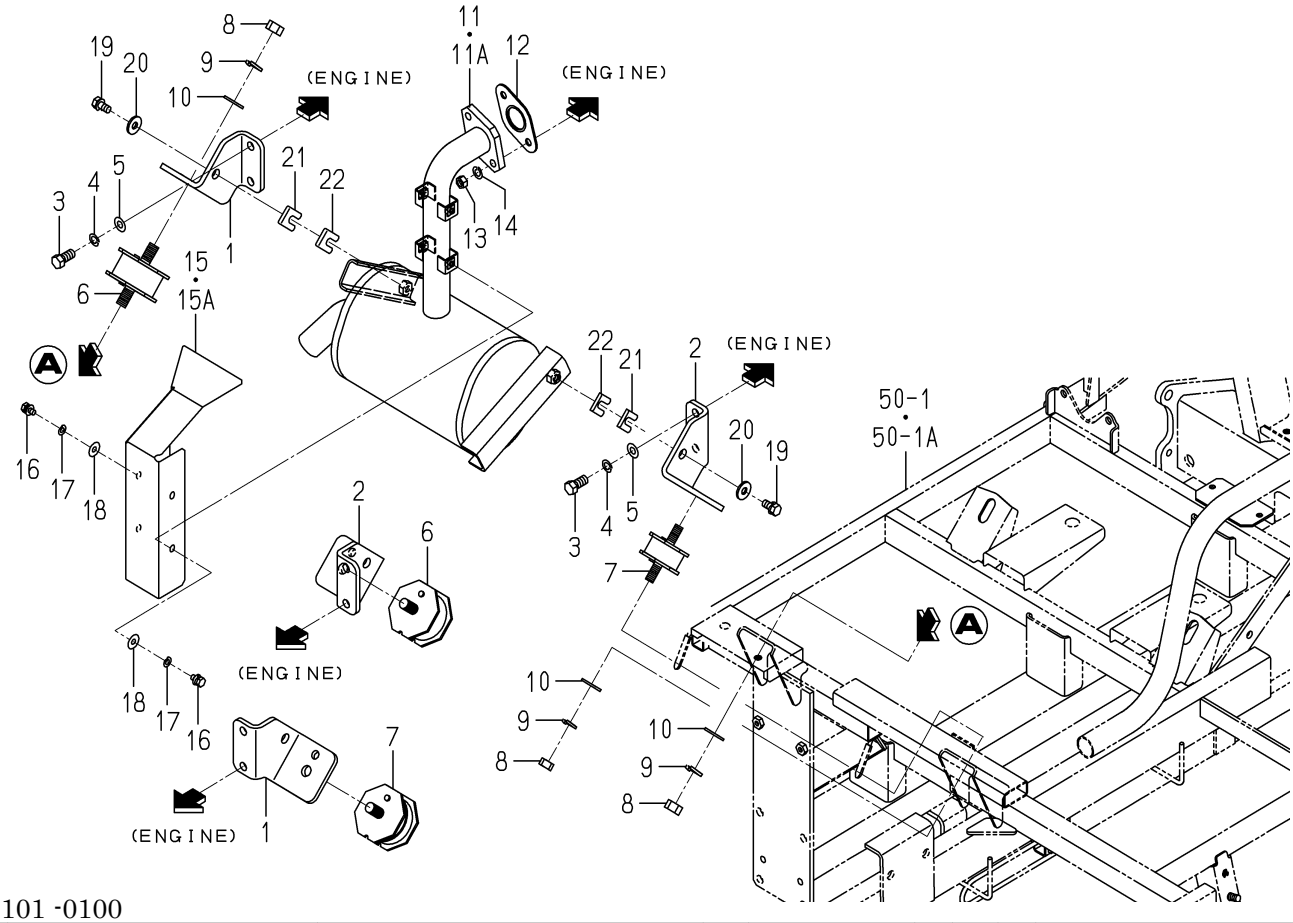

2233-101 -0100

KEY	PART CODE	DESCRIPTION	SPC	TYPE OF MODEL NP60E16		ITC	COL	GRP	REMARKS
1	2213-101-001-10	BRACKET/ENGINE/A	*	2					
2	2213-101-002-10	BRACKET/ENGINE/B	*	2					
3	V203-461-002-20	BOLT/M10X22/9T,P1.25	*	8					
4	V401-160-010-00	WASHER,SP/M10	*	8					
5	V411-260-010-00	WASHER,PL/M10	*	8					
6	3623-150-003-10	INSULATOR/MOUNT/LH	*	2					
7	3656-302-009-10	INSULATOR/MOUNT/34	*	2					
8	V304-260-012-00	NUT/M12	*	8					
9	V401-160-012-00	WASHER,SP/M12	*	8					
10	V411-260-012-00	WASHER,PL/M12	*	8					
11	2233-101-500-00	MUFFLER/D COMP	*	1 -61					
11A	2233-101-500-10	MUFFLER/D COMP	*	1 62-		1			
12	3659-301-001-00	GASKET	*	1					
13	V304-700-008-00	NUT,SUS/M8	*	2					
14	V401-700-008-00	WASHER,SP/M8	*	2					
15	2233-101-007-00	COVER/EXAUST/NP8	*	1 -630					
15A	2233-101-007-10	COVER/EXAUST/NP8	*	1 631-		1			
16	V200-700-601-20	BOLT,SUS/M6X12	*	4					
17	V401-700-006-00	WASHER,SP/M6	*	4					
18	3560-503-302-00	WASHER,WIRE TENSION	*	4					
19	V211-260-802-00	BOLT,S/M8X20	*	2					
20	4106-102-028-00	WASHER	*	2					
21	2213-101-015-10	SHIM/MUFFLER	*	2					
22	2213-101-016-00	SHIM/MUFFLER	*	2					

FIG. 3 RADIATOR SYSTEM(G TYPE EXCEPT R)(1/2)

29,30-PLEASE SEE 2/2 PAGE

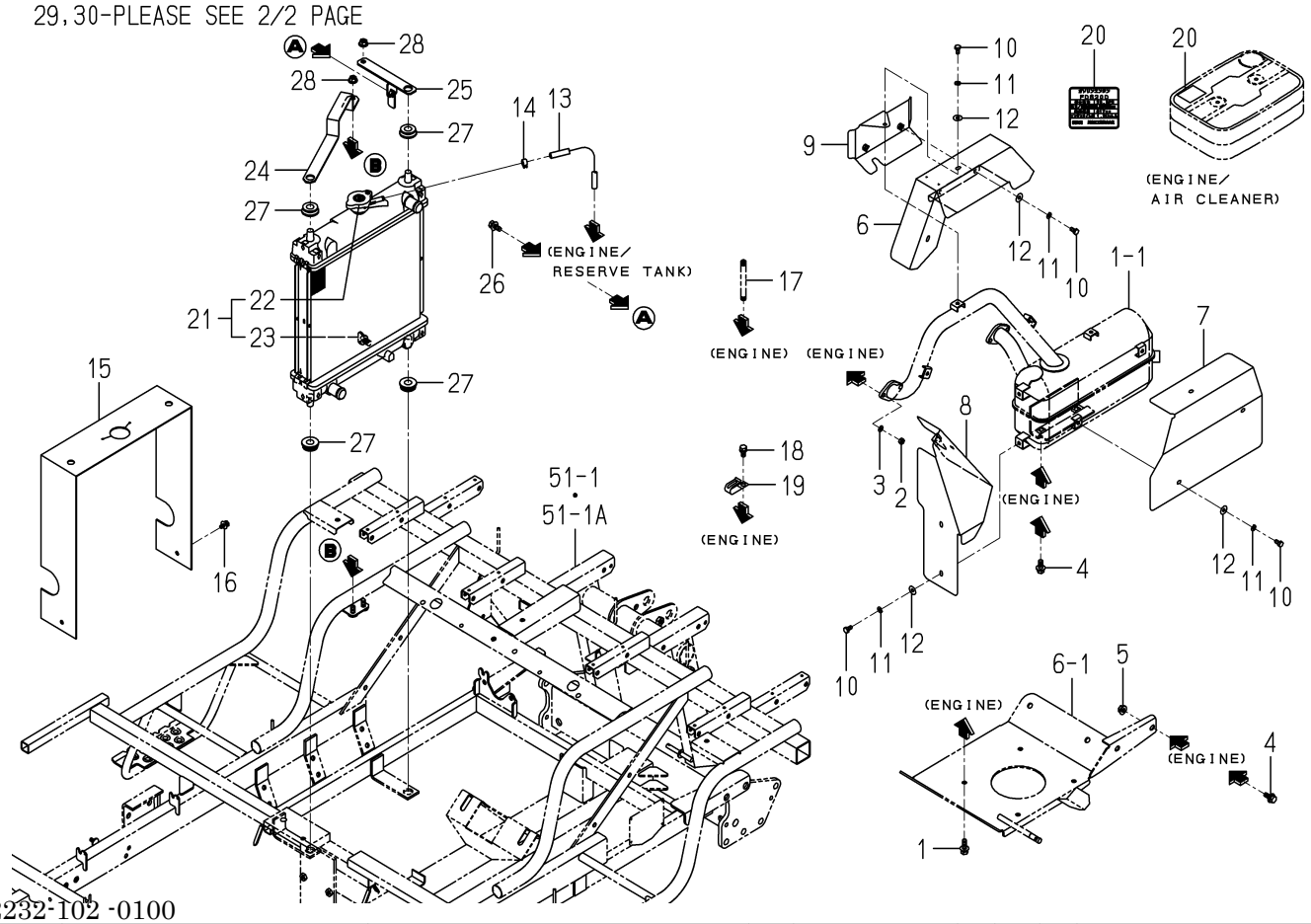

2232-102 -0100

KEY	PART CODE	DESCRIPTION	SPC	TYPE OF MODEL NP60E16		ITC	COL	GRP	REMARKS
1	V211-360-802-50	BOLT,SP/M8X25	*	4					
2	V301-700-006-00	NUT,SUS/M6	*	4					
3	V401-700-006-00	WASHER,SP/M6	*	4					
4	V211-360-802-00	BOLT,SP/M8X20	*	4					
5	V362-260-008-00	NUT/WASHER/M8	*	2					
6	2213-101-250-10	COVER/EXHAUST/F COMP	*	1					
7	2232-101-004-00	COVER/MUFFLER/NP	*	1					
8	2204-101-001-20	COVER/EXT	*	1					
9	2204-101-390-50	COVER/MUFFLER/G COMP	*	1					
10	V200-700-601-20	BOLT,SUS/M6X12	*	10					
11	V401-700-006-00	WASHER,SP/M6	*	10					
12	3560-503-302-00	WASHER,WIRE TENSION	*	9					
13	2232-101-002-00	HOSE/300	*	1					
14	J062-111-120-00	CLIP/HOSE/11.1-12.0	*	1					
15	2213-102-031-20	COVER/RADIATOR/UPPER	*	1 -60					
16	2144-501-011-10	BOLT/M6X16X16	*	2 -60					
17	2213-101-027-00	CORRUGATED TUBE/07X0	*	1					
18	V211-260-801-60	BOLT,S/M8X16	*	1					
19	1425-621-004-00	HOLDER/JE/9-9	*	1					
20	2200-911-004-00	LABEL/ENGINE	*	1 -60					
21	2213-102-300-10	RADIATOR/G ASSY	*	1					
22	1650-102-202-10	CAP	*	1					
23	3822-330-601-00	COCK	*	1					
24	2232-102-011-20	STAY/RADIATOR/UPPER/	*	1					
25	2232-102-250-10	STAY/RADIATOR/UPPER/	*	1					
26	V211-360-802-00	BOLT,SP/M8X20	*	1					
27	1719-730-002-00	GROMMET/15X17X05	*	4					
28	V362-260-008-00	NUT/WASHER/M8	*	2					
29	2232-101-061-00	HOSE/COOLING/LOWER/6	*	1					
30	2213-101-602-10	HOSE/COOLING/UPPER/6	*	1					

FIG. 3 RADIATOR SYSTEM(G TYPE EXCEPT R)(2/2)

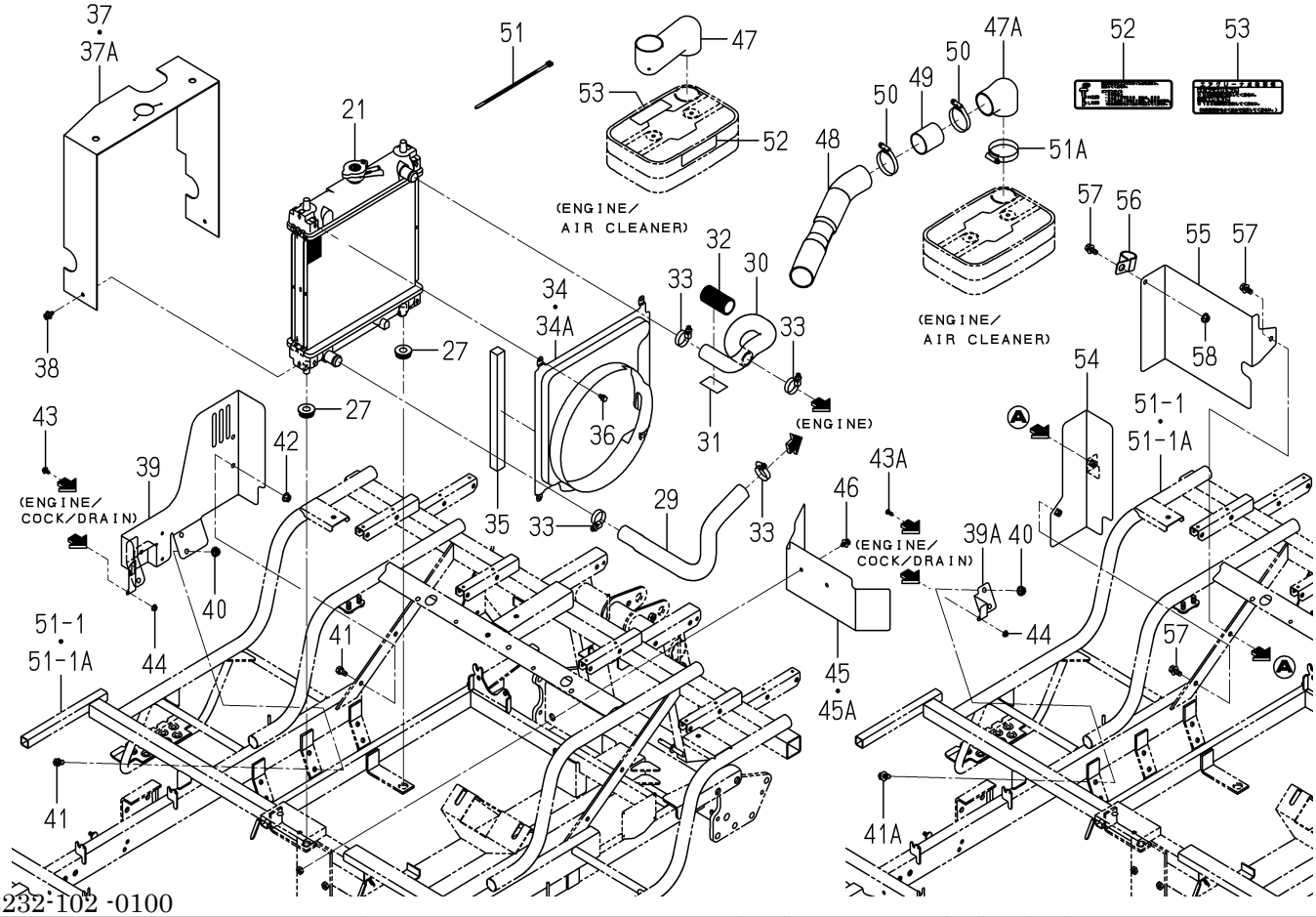

2232-102 -0100

KEY	PART CODE	DESCRIPTION	SPC	TYPE OF MODEL NP60E16		ITC	COL	GRP	REMARKS
31	4132-303-003-00	PLATE/RUBBER/30X50X0	*	1					
32	2232-102-022-00	CORRUGATETUBE/28X65	*	1					
33	J061-120-032-00	CLAMP/WORM/20-32	*	4					
34	2204-102-002-00	SHROUD/FD620/E18	*	1 -301					
34A	2204-102-002-10	SHROUD/FD620/E18	*	1 302-		1			
35	1716-782-005-00	INSULATOR/20X280	*	2					
36	V210-360-601-20	BOLT,SP/M6X12	*	4					
37	2232-102-016-10	COVER/RADIATOR/UPPER	*	1 -60					
37A	2232-102-024-00	COVER/RADIATOR/UPPER	*	1 61-					
38	2144-501-011-10	BOLT/M6X16X16	*	2					
39	2232-102-260-40	COVER/RADIATOR COMP	*	1 -1222					
39A	2232-102-036-00	PLATE/STAY/COCK	*	1 1223-					
40	V362-260-008-00	NUT/WASHER/M8	*	2					
41	V211-260-801-60	BOLT,S/M8X16	*	3 -1222					
41A	V211-360-802-00	BOLT,SP/M8X20	*	2 1223-					
42	V362-260-008-00	NUT/WASHER/M8	*	1 -1222					
43	V120-365-001-20	SCREW,SP/M5X12	*	1 -1222					
43A	V120-265-001-20	SCREW,SEMS/M5X12	*	1 1223-					
44	V360-260-005-00	NUT/WASHER/M5	*	1					
45	2232-102-015-10	PARTITION/NP	*	1 -60					
45A	2232-102-015-20	PARTITION/NP	*	1 61-		1			
46	2144-501-011-10	BOLT/M6X16X16	*	2					
47	2232-102-007-00	HOSE/AIRCLEANER/FD62	*	1 -1222					
47A	2232-102-032-00	DUCT/CLEANER/FD620	*	1 1223-					
48	2232-102-033-00	HOSE/AIRINTAKE/FD620	*	1 1223-					
49	2232-102-034-00	PIPE/AIRINTAKE/FD620	*	1 1223-					
50	J061-132-050-00	CLAMP/WORM/32-50	*	2 1223-					
51	1342-402-006-00	BAND,WIRE/250	*	1 -1222					
51A	J061-145-060-10	CLAMP/WORM/45-60	*	1 1223-					
52	2232-912-025-00	LABEL/OIL LEVEL/FD62	*	1					

FIG. 3 RADIATOR SYSTEM(G TYPE EXCEPT R)(2/2)

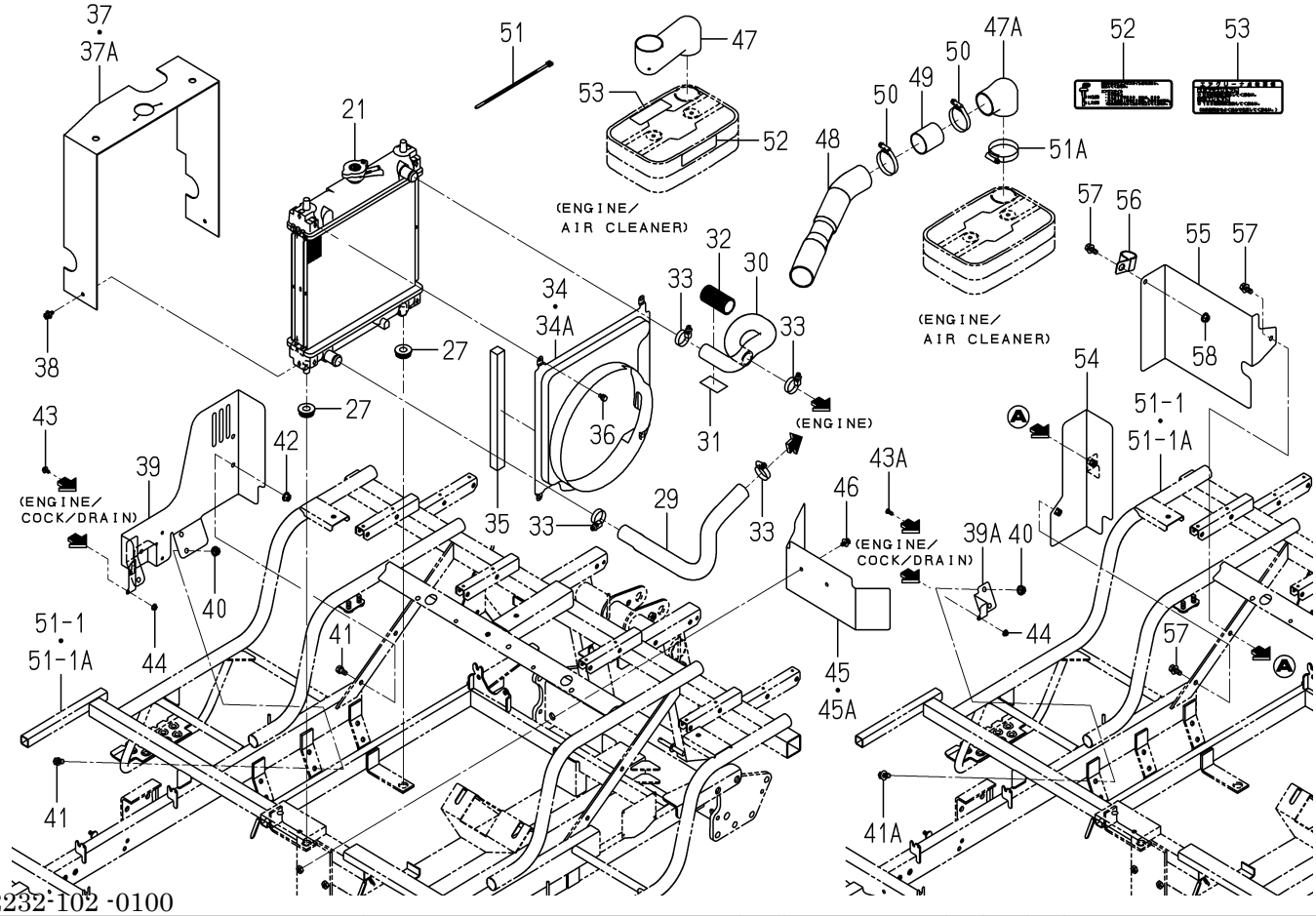

2232-102 -0100

KEY	PART CODE	DESCRIPTION	SPC	TYPE OF MODEL NP60E16		ITC	COL	GRP	REMARKS
53	2232-912-026-00	LABEL/AIR CLEANER/FD	*	1					
54	2232-102-270-00	COVER/RADIATOR/IN	*	1 1223-					
55	2232-102-037-00	COVER/RADIATOR/OUT	*	1 1223-					
56	2232-102-038-00	HOLDER/30	*	1 1223-					
57	V211-360-802-00	BOLT,SP/M8X20	*	3 1223-					
58	V362-260-008-00	NUT/WASHER/M8	*	1 1223-					

FIG. 4 RADIATOR&CLEANER(AIR)SYSTEM(D TYPE)

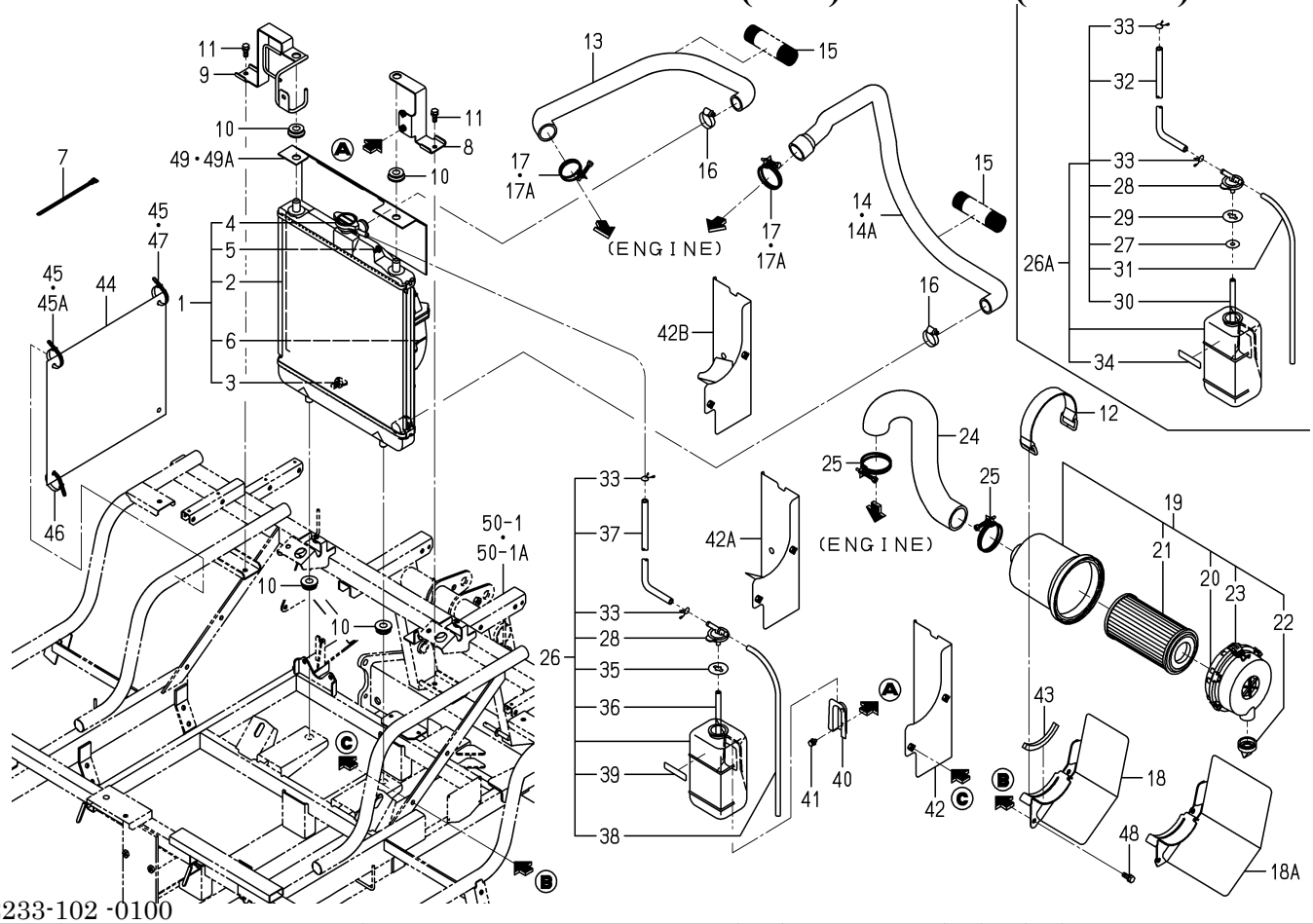

2233-102 -0100

KEY	PART CODE	DESCRIPTION	SPC	TYPE OF MODEL NP60E16		ITC	COL	GRP	REMARKS
1	2213-102-400-00	RADIATOR ASSY	*	1					
2	2213-102-401-00	RADIATOR/SUB ASSY	*	1					
3	2213-102-402-00	COCK ASSY	*	1					
4	2213-102-403-00	PRESSURECAP	*	1					
5	2213-102-404-00	FLANGEBOLT	*	2					
6	2213-102-405-00	SHROUDFAN ASSY	*	1					
7	1421-621-038-00	BAND,WIRE/170	*	1 451-					
8	2233-102-230-00	STAY/RADIATOR/L COMP	*	1					
9	2233-102-220-10	STAY/RADIATOR/R COMP	*	1		1			
10	1719-730-002-00	GROMMET/15X17X05	*	4					
11	V211-260-802-00	BOLT,S/M8X20	*	2					
12	3640-260-200-30	BATTERYSTAY COMP	*	1					
13	2233-101-004-00	HOSE/RADIATOR/UPPER	*	1					
14	2233-101-005-00	HOSE/RADIATOR/ROWER	*	1 -142					
14A	2233-101-005-10	HOSE/RADIATOR/ROWER	*	1 143-		1			
15	2213-102-002-00	CORRUGATETUBE/28X120	*	2					
16	J061-123-035-00	CLAMP/WORM/23-35	*	2					
17	J061-236-044-00	CLAMP/WIRE/36-44	*	2 -134					
17A	J061-238-046-00	CLAMP/WIRE/38-46	*	2 135-					
18	2233-102-250-00	STAY/AIRCLEANER COMP	*	1 -60					
18A	2233-102-250-30	STAY/AIRCLEANER COMP	*	1 61-		1			
19	1728-104-210-00	CLEANER/AIR ASSY	*	1					
20	1675-104-211-00	COVER ASSY	*	1					
21	1675-104-213-00	ELEMENT ASSY	*	1					
22	1544-104-205-00	VALVE	*	1					
23	1650-104-201-00	CLIP	*	2					
24	2233-101-006-00	HOSE/AIRCLEANER	*	1					
25	J061-249-060-00	CLAMP/WIRE/49-60	*	2					
26	3805-301-320-00	TANK,RESERVE	*	1 -630					
26A	3805-301-320-10	RESERVETANK	*	1 631-		1			

FIG. 4 RADIATOR&CLEANER(AIR)SYSTEM(D TYPE)

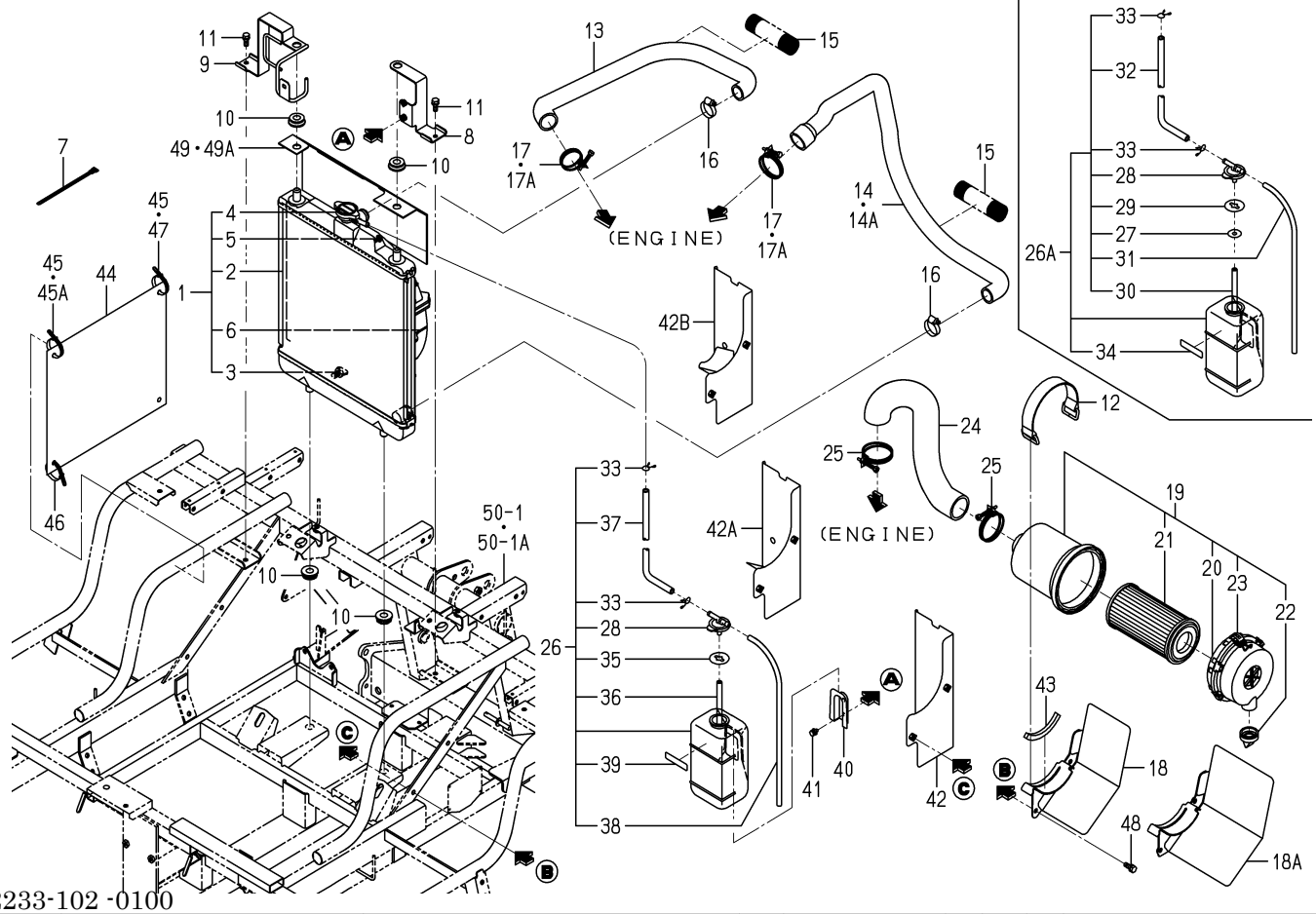

2233-102 -0100

KEY	PART CODE	DESCRIPTION	SPC	TYPE OF MODEL NP60E16		ITC	COL	GRP	REMARKS
27	3872-301-301-00	ANGLE	*	1 631-					
28	6221-408-008-00	CAP	*	1					
29	6221-408-009-00	PACKING	*	1 631-					
30	3872-301-302-00	HOSE/RUBBER	*	1 631-					
31	6221-408-011-00	PIPE	*	1 631-					
32	3872-301-303-00	HOSE/RUBBER	*	1 631-					
33	6221-408-013-00	CLAMP	*	2					
34	6221-408-007-00	PLATE/CAUTION	*	1 631-					
35	6221-408-009-00	PACKING	*	1 -630					
36	6221-408-010-00	HOSE/RUBBER	*	1 -630					
37	3805-301-321-00	HOSE/RUBBER	*	1 -630					
38	6221-408-011-00	PIPE	*	1 -630					
39	6221-408-007-00	PLATE/CAUTION	*	1 -630					
40	6221-408-003-00	BRACKET/RESERVE TANK	*	1					
41	V210-360-601-20	BOLT,SP/M6X12	*	2					
42	2233-102-350-00	COVER/RADIATOR/RH	*	1 -60					
42A	2233-102-350-20	COVER/RADIATOR/RH	*	1 -1187		1			
42B	2233-102-350-30	COVER/RADIATOR/LH	*	1 1188-		1			
43	2161-320-001-00	MOLE/70	*	1					
44	2233-102-008-00	COVER/RADIATOR/RH	*	1					
45	1376-402-003-00	BAND,WIRE/140	*	2 -630					
45A	1376-402-003-00	BAND,WIRE/140	*	1 631-					
46	1421-621-038-00	BAND,WIRE/170	*	1					
47	1342-402-006-00	BAND,WIRE/250	*	1 631-					
48	V211-260-802-00	BOLT,S/M8X20	*	2					
49	2213-102-052-00	COVER/RADIATOR/UPPER	*	1 -60					
49A	2232-102-023-00	COVER/RADIATOR/UPPER	*	1 61-					

FIG. 5 ALTERNATOR SYSTEM(GF TYPE)

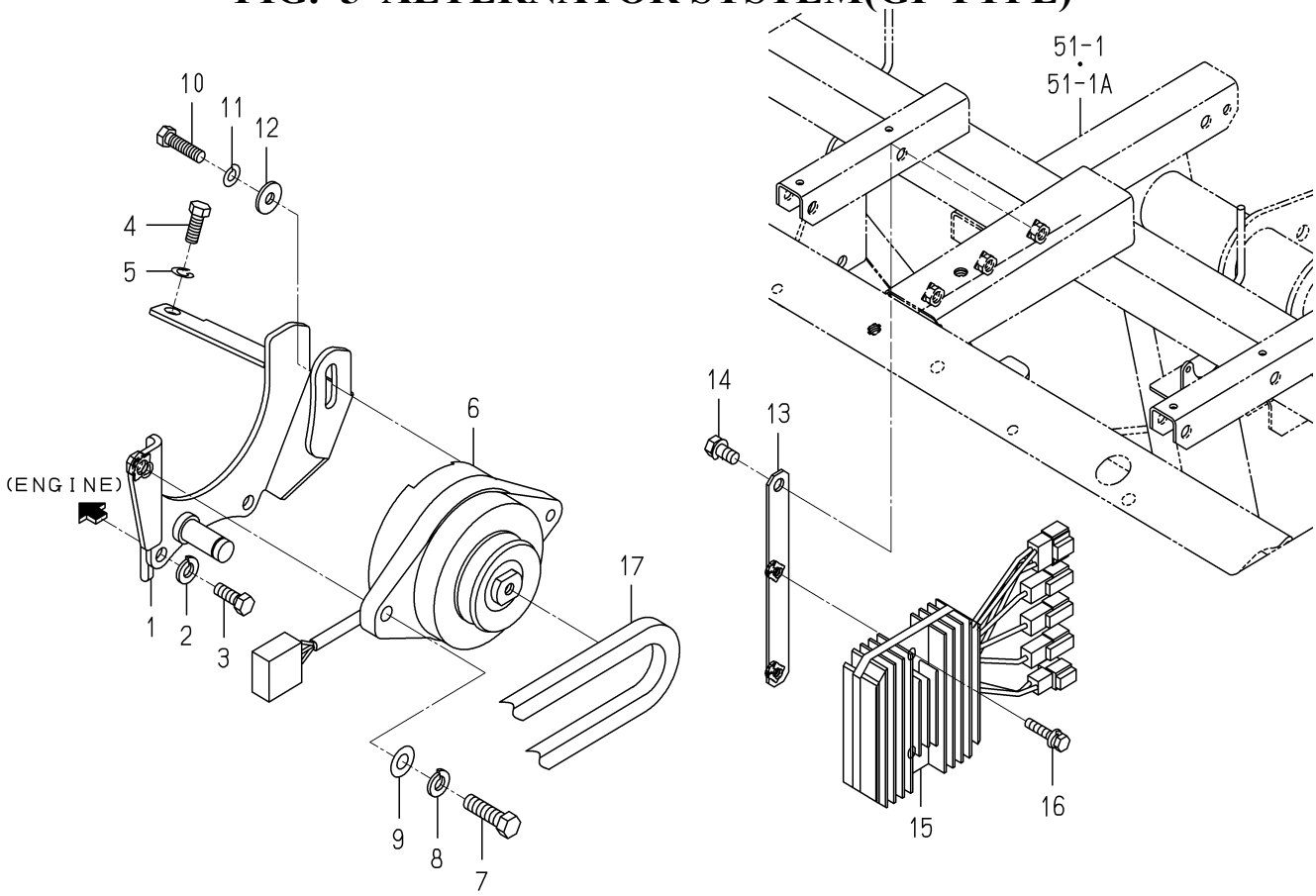

2232-102A-0100

KEY	PART CODE	DESCRIPTION	SPC	TYPE OF MODEL NP60E16		ITC	COL	GRP	REMARKS
1	2220-101-700-00	BRACKET/GENERATOR/FD	*	1					
2	V401-160-010-00	WASHER,SP/M10	*	2					
3	2162-105-001-00	BOLT/UNC3/8X22	*	2					
4	8836-102-002-00	BOLT/M8X20	*	1					
5	V401-160-008-00	WASHER,SP/M8	*	1					
6	8841-101-300-00	GENERATOR	*	1					
7	V201-261-003-50	BOLT/M10X35	*	1					
8	V401-160-010-00	WASHER,SP/M10	*	1					
9	V411-260-010-00	WASHER,PL/M10	*	1					
10	8836-103-002-00	BOLT/M8X30	*	1					
11	V401-160-008-00	WASHER,SP/M8	*	1					
12	2144-735-006-00	WASHER	*	1					
13	2232-101-230-10	LATE/REGULATOR COMP	*	1					
14	V211-260-801-60	BOLT,S/M8X16	*	1					
15	8844-101-002-10	REGULATOR/Z ASSY	*	1					
16	V210-360-603-00	BOLT,SP/M6X30	*	2					
17	8844-101-001-00	BELT/VA023	*	1					

FIG. 6 BRACKET(ENGINE)SYSTEM(G TYPE)

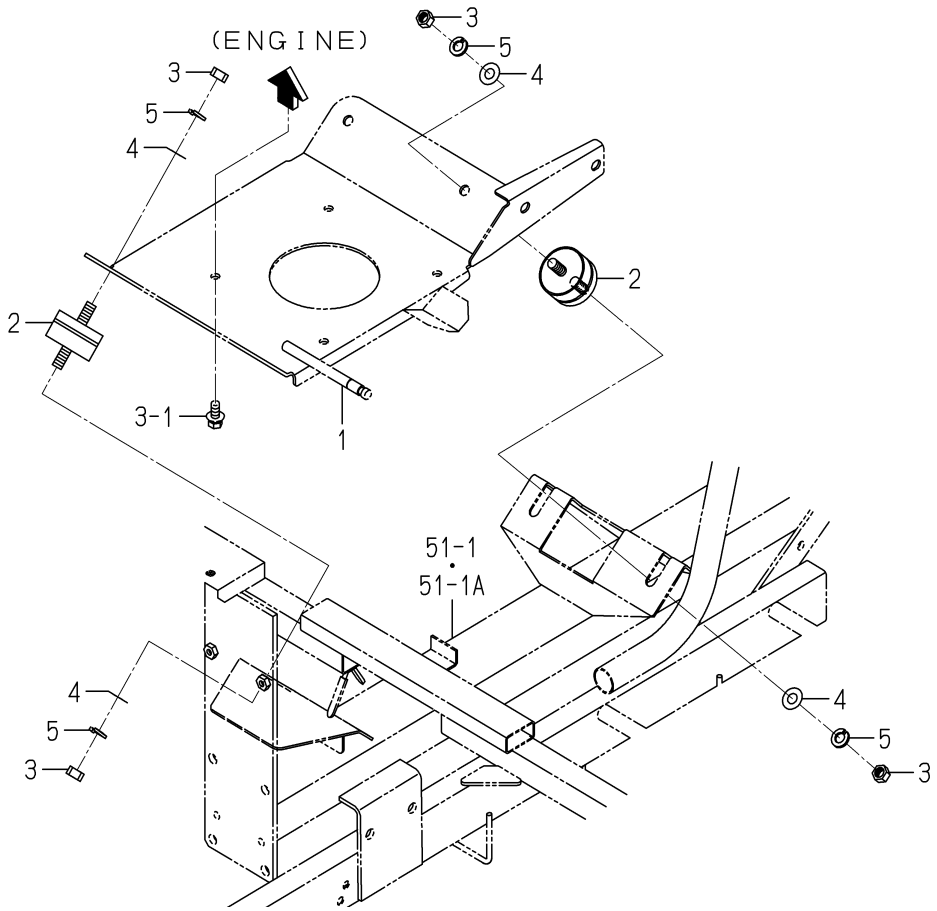

2232-103 -0100

KEY	PART CODE	DESCRIPTION	SPC	TYPE OF MODEL NP60E16		ITC	COL	GRP	REMARKS
1	2232-103-200-10	BASE/ENGINE/HG COMP	*	1		1			
2	2161-103-001-00	INSULATOR	*	4					
3	V304-260-010-00	NUT/M10	*	8					
4	V411-260-010-00	WASHER,PL/M10	*	8					
5	V401-160-010-00	WASHER,SP/M10	*	8					

FIG. 7 PULLEY(ENGINE)SYSTEM(GF TYPE)

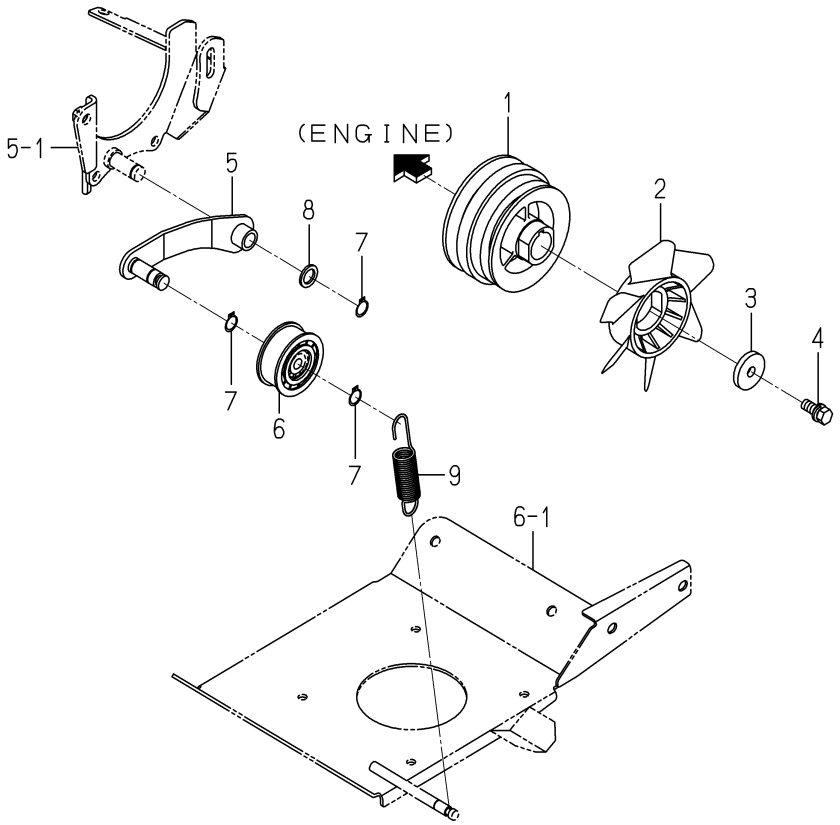

2232-105 -0100

KEY	PART CODE	DESCRIPTION	SPC	TYPE OF MODEL NP60E16		ITC	COL	GRP	REMARKS
1	2232-105-005-10	PULLEY/VB115/VA106	*	1					
2	2232-105-007-10	FUN/COOLING/NP	*	1		1			
3	2204-105-013-00	WASHER/11X46X06	*	1					
4	2204-601-007-10	BOLT/SEAL/M10X25/S	*	1		1			
5	2204-105-240-20	ARM/TENSION/FD COMP	*	1					
6	3621-211-002-00	PULLEY,TENSION	*	1					
7	V704-140-015-00	RING,SNAP/15 C	*	3					
8	2144-337-007-00	WASHER	*	1					
9	2194-106-002-00	SPRING/HE110	*	1					

FIG. 8 PULLEY(ENGINE)SYSTEM(D TYPE)

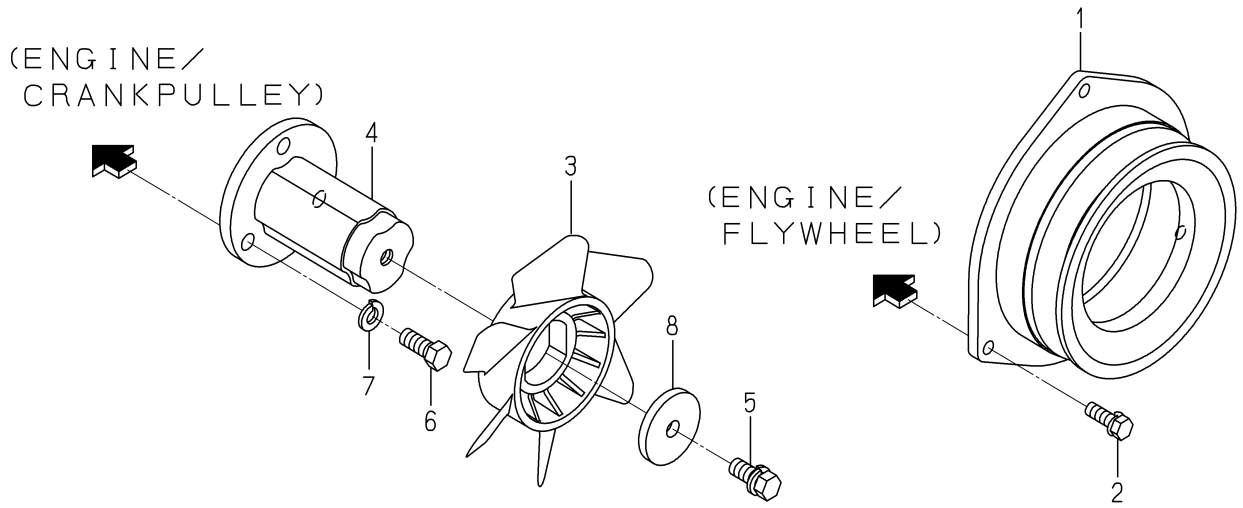

2233-105 -0100

KEY	PART CODE	DESCRIPTION	SPC	TYPE OF MODEL NP60E16		ITC	COL	GRP	REMARKS
1	2233-105-003-00	PULLEY/VC140	*	1					
2	V211-260-802-50	BOLT,S/M8X25	*	3					
3	2232-105-007-10	FUN/COOLING/NP	*	1		1			
4	2233-105-004-10	BASE/COOLINGFAN/D	*	1		1			
5	2204-601-007-10	BOLT/SEAL/M10X25/S	*	1					
6	V203-461-002-50	BOLT/M10X25/9T,P1.25	*	3					
7	V401-160-010-00	WASHER,SP/M10	*	3					
8	2204-105-013-00	WASHER/11X46X06	*	1					

FIG. 9 PULLEY(ENGINE)SYSTEM(G TYPE EXCEPT F)

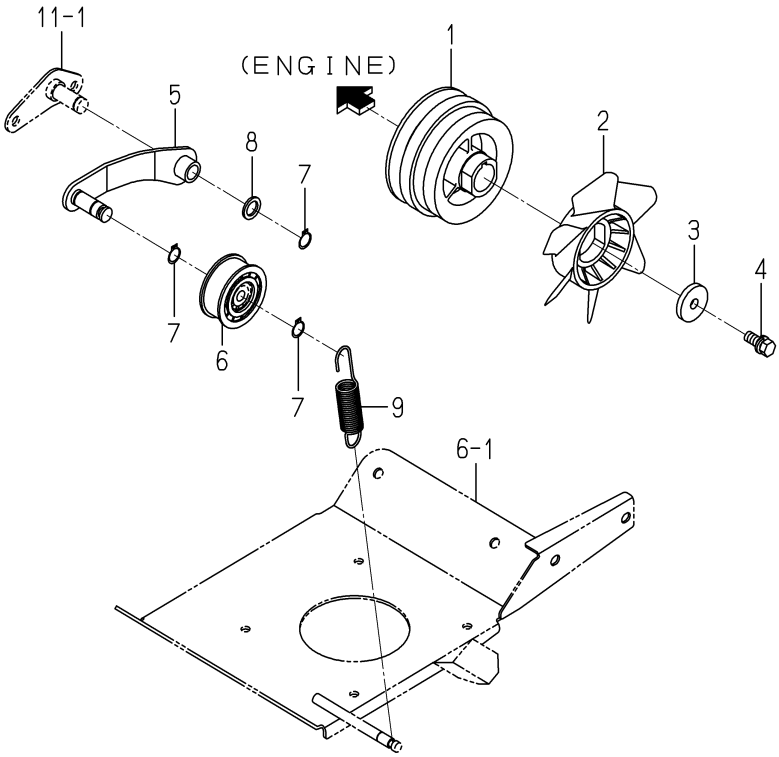

2232-105B-0100

KEY	PART CODE	DESCRIPTION	SPC	TYPE OF MODEL NP60E16		ITC	COL	GRP	REMARKS
1	2232-105-011-10	PULLEY/VB115	*	1					
2	2232-105-007-10	FUN/COOLING/NP	*	1					
3	2204-105-013-00	WASHER/11X46X06	*	1					
4	2204-601-007-10	BOLT/SEAL/M10X25/S	*	1					
5	2204-105-240-20	ARM/TENSION/FD COMP	*	1					
6	3621-211-002-00	PULLEY,TENSION	*	1					
7	V704-140-015-00	RING,SNAP/15 C	*	3					
8	2144-337-007-00	WASHER	*	1					
9	2194-106-002-00	SPRING/HE110	*	1					

FIG. 10 TENSION(BELT/ENGINE)SYSTEM(D TYPE)

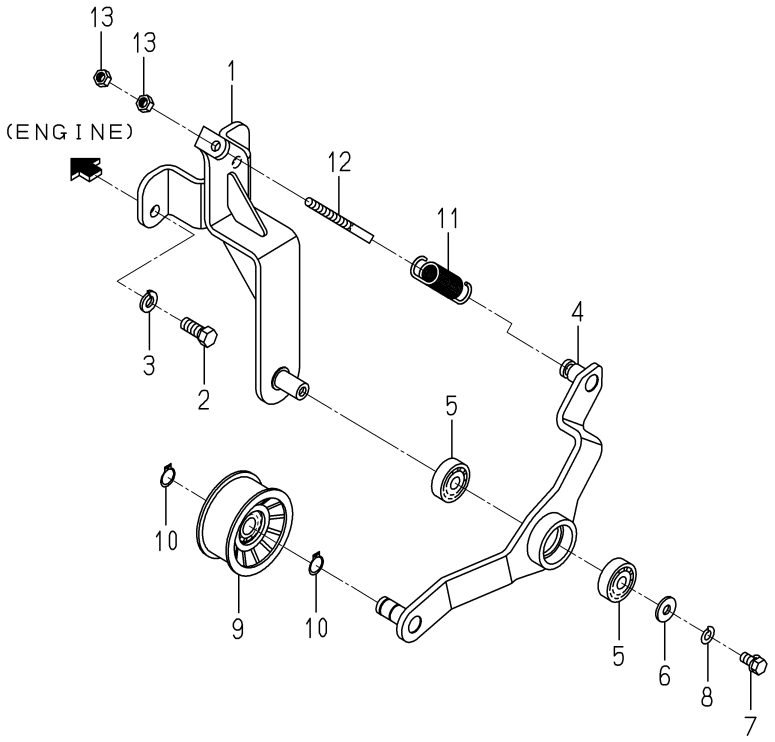

2233-106 -0100

KEY	PART CODE	DESCRIPTION	SPC	TYPE OF MODEL NP60E16		ITC	COL	GRP	REMARKS
1	2233-106-210-20	BASE/TENSION/D COMP	*	1		1			
2	V203-461-002-50	BOLT/M10X25/9T,P1.25	*	2					
3	V401-160-010-00	WASHER,SP/M10	*	2					
4	2233-106-200-10	ARM/TENSION COMP	*	1		1			
5	V600-150-620-20	BEARING,RB/6202SS	*	2					
6	4106-102-028-00	WASHER	*	1					
7	V201-360-801-60	BOLT/M8X16/7T	*	1					
8	V401-160-008-00	WASHER,SP/M8	*	1					
9	3737-314-003-00	PULLEY,TENSION/70BS	*	1					
10	V704-140-015-00	RING,SNAP/15 C	*	2					
11	2188-105-004-00	SPRING/HE089	*	1					
12	2142-407-002-10	ROD,ADJUST/90	*	1					
13	V304-260-008-00	NUT/M8	*	2					

FIG. 11 PIVOT(TENSION/BELT)SYSTEM (G TYPE EXCEPT F)

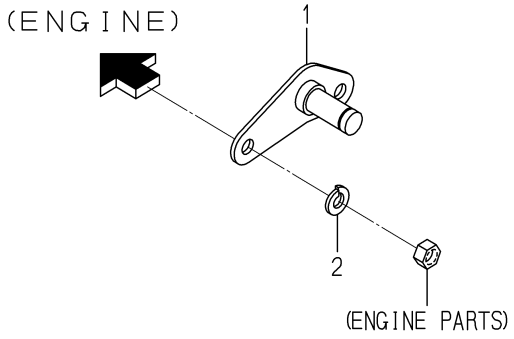

2204-106G-0100

KEY	PART CODE	DESCRIPTION	SPC	TYPE OF MODEL NP60E16		ITC	COL	GRP	REMARKS
1	2204-106-210-00	STAY	*	1					
2	V401-160-010-00	WASHER,SP/M10	*	2					

FIG. 12 TANK(FUEL)SYSTEM(G TYPE)

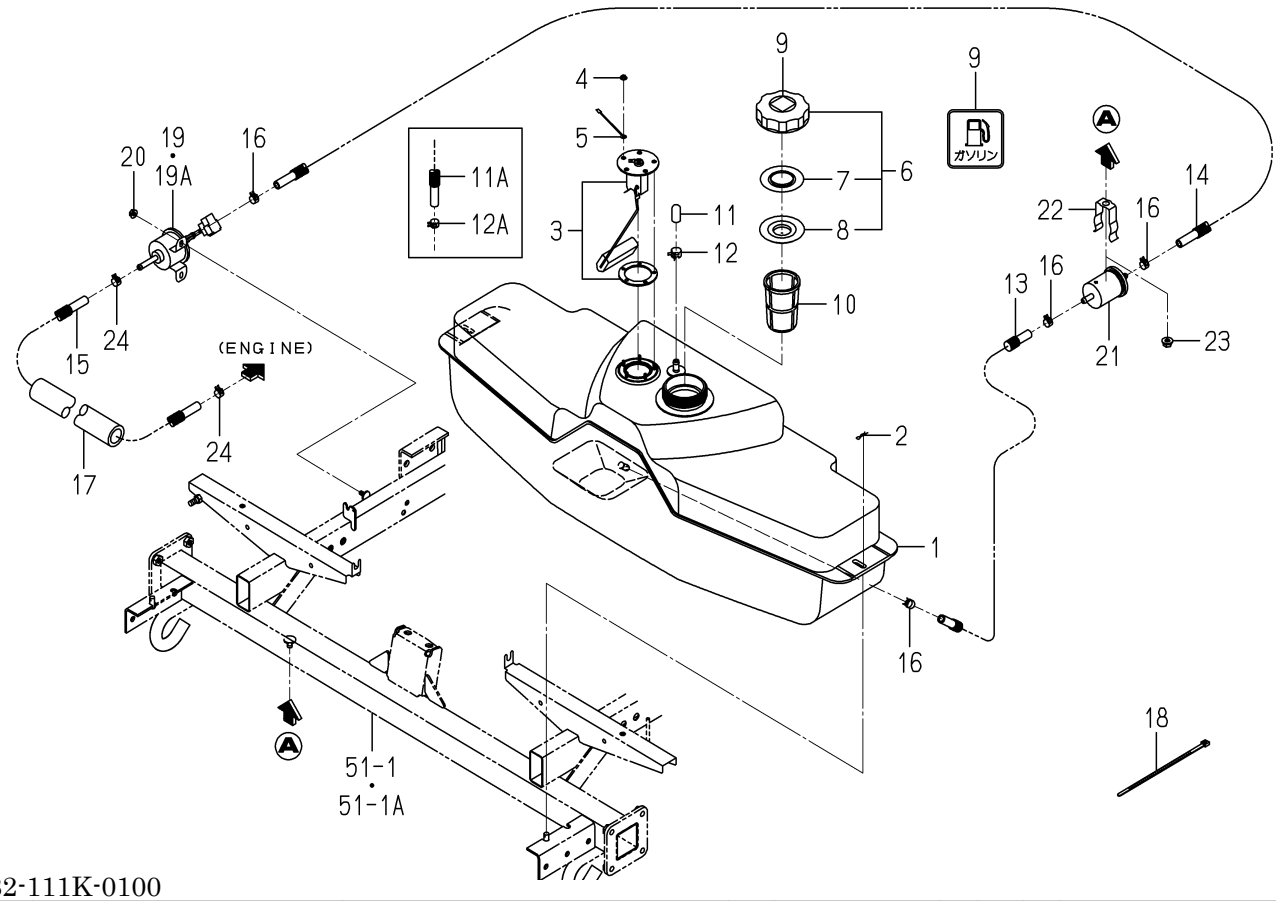

2232-111K-0100

KEY	PART CODE	DESCRIPTION	SPC	TYPE OF MODEL NP60E16		ITC	COL	GRP	REMARKS
1	2232-111-001-10	TANK/FUEL/NP	*	1					
2	3908-170-020-00	PIN/SNAP/08	*	2					
3	2213-111-300-10	GAUGE/FUEL/0-57 ASSY	*	1					
4	V360-260-004-00	NUT/WASHER/M4	*	5					
5	2204-111-006-10	HARNESS/SWGND/5	*	1					
6	1729-111-280-20	CAP/TANK/NONLEA ASSY	*	1					
7	1729-111-283-00	PLATE	*	1					
8	1729-111-284-00	PACKING	*	1					
9	2500-907-017-00	LABEL/PETROL	*	1					
10	1729-111-006-10	FILTER/FUEL	*	1					
11	2213-111-014-00	CAP/9	*	1 -1187					
11A	2232-111-008-00	HOSE/FUEL/660	*	1 1188-					
12	J062-147-159-00	CLIP/HOSE/14.7-15.9	*	1 -1187					
12A	J062-126-134-00	CLIP/HOSE/12.6-13.4	*	1 1188-					
13	2204-111-005-40	HOSE/FUEL/210	*	1					
14	2232-111-007-00	HOSE/FUEL/340	*	1					
15	2232-111-008-00	HOSE/FUEL/660	*	1					
16	J062-126-134-00	CLIP/HOSE/12.6-13.4	*	4					
17	2232-111-011-00	TUBE/25X37X480	*	1 1188-					
18	1376-402-003-00	BAND,WIRE/140	*	1 1188-					
19	2221-111-200-00	PUMP/FUEL ASSY	*	1 -408					
19A	2221-111-200-10	PUMP/FUEL ASSY	*	1 409-		1			
20	V360-260-006-00	NUT/WASHER/M6	*	2					
21	3830-311-210-00	FILTER,FUEL	*	1					
22	6219-755-001-00	HOLDER(FUEL FILTER)	*	1					
23	V362-260-008-00	NUT/WASHER/M8	*	1					
24	J062-138-148-00	CLIP/HOSE/13.8-14.8	*	2					

FIG. 13 TANK(FUEL)SYSTEM(D TYPE)

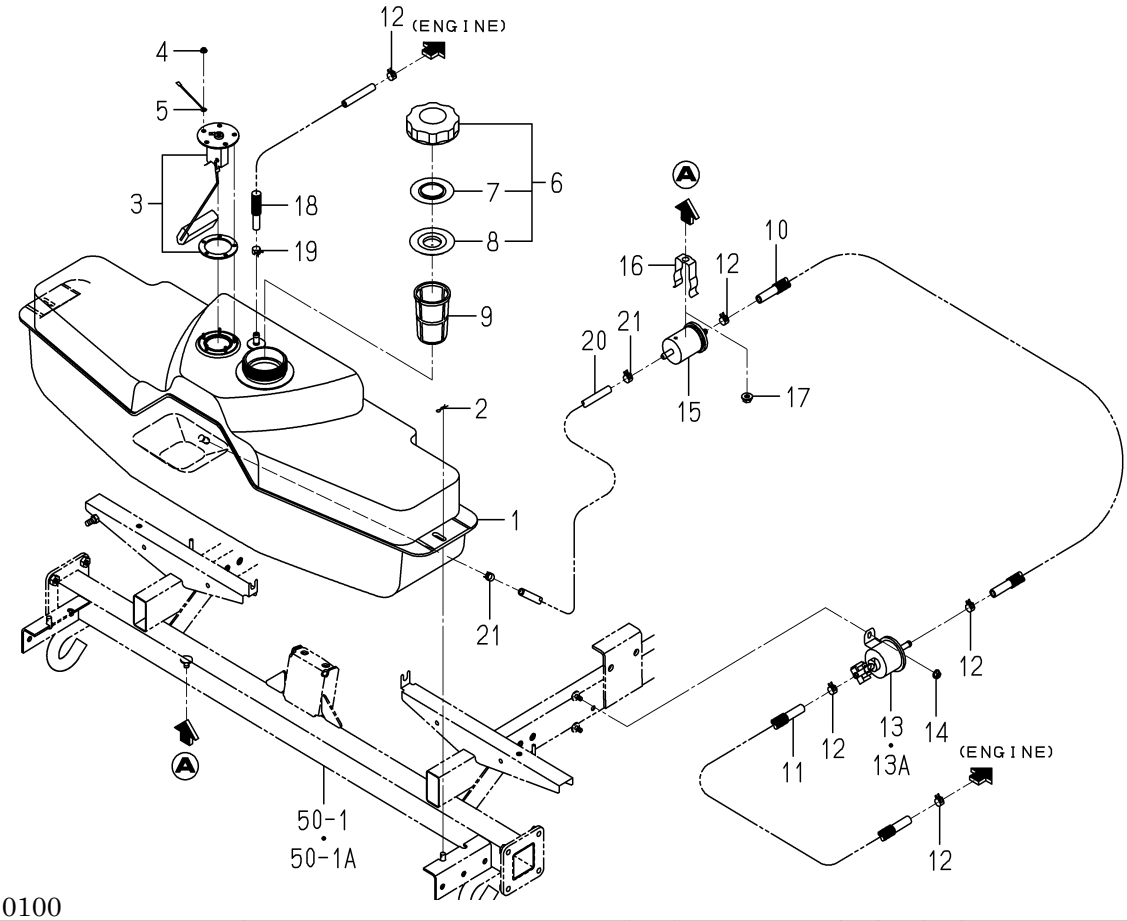

2233-111K-0100

KEY	PART CODE	DESCRIPTION	SPC	TYPE OF MODEL NP60E16		ITC	COL	GRP	REMARKS
1	2232-111-001-10	TANK/FUEL/NP	*	1					
2	3908-170-020-00	PIN/SNAP/08	*	2					
3	2213-111-300-10	GAUGE/FUEL/0-57 ASSY	*	1					
4	V360-260-004-00	NUT/WASHER/M4	*	5					
5	2204-111-006-10	HARNESS/SWGND/5	*	1					
6	1729-111-280-20	CAP/TANK/NONLEA ASSY	*	1					
7	1729-111-283-00	PLATE	*	1					
8	1729-111-284-00	PACKING	*	1					
9	1729-111-006-10	FILTER/FUEL	*	1					
10	2232-111-007-00	HOSE/FUEL/340	*	1					
11	2232-111-006-00	HOSE/FUEL/1280	*	1					
12	J062-126-134-00	CLIP/HOSE/12.6-13.4	*	5					
13	2221-111-200-00	PUMP/FUEL ASSY	*	1 -408					
13A	2221-111-200-10	PUMP/FUEL ASSY	*	1 409-		1			
14	V360-260-006-00	NUT/WASHER/M6	*	2					
15	3830-311-210-00	FILTER,FUEL	*	1					
16	6219-755-001-00	HOLDER(FUEL FILTER)	*	1					
17	V362-260-008-00	NUT/WASHER/M8	*	1					
18	2213-111-002-10	HOSE/07X11X1750	*	1					
19	J062-119-126-00	CLIP/HOSE/11.9-12.6	*	1					
20	2204-111-025-00	HOSE/07X11X460	*	1					
21	J062-111-120-00	CLIP/HOSE/11.1-12.0	*	2					

FIG. 14 LEVER(MAIN)SYSTEM(G TYPE)

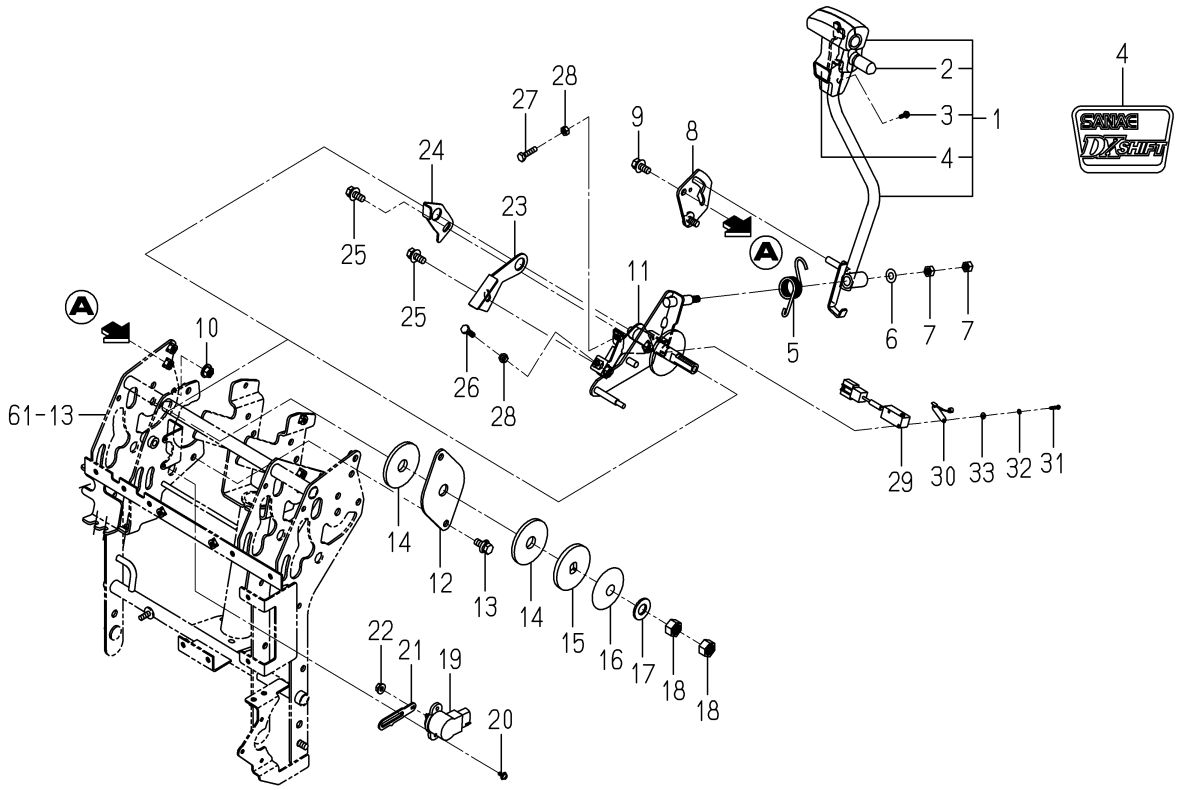

2232-124 -0100

KEY	PART CODE	DESCRIPTION	SPC	TYPE OF MODEL NP60E16		ITC	COL	GRP	REMARKS
1	2232-124-200-20	LEVER/HST/NP SET	*	1					
2	2204-124-631-00	CAP/SWITCH	*	1					
3	V120-376-001-20	SCREW,SP/M6X12	*	2					
4	2232-912-023-00	ORNAMENT/DX/SHIFT	*	1					
5	2232-124-003-00	SPRING/HT025/HST	*	1					
6	V411-260-008-00	WASHER,PL/M8	*	1					
7	V304-260-008-00	NUT/M8	*	2					
8	2232-124-240-00	GUIDE/HST/NP COMP	*	1					
9	V211-360-802-00	BOLT,SP/M8X20	*	1					
10	V362-260-008-00	NUT/WASHER/M8	*	1					
11	2232-124-250-20	CAM/HST/NP COMP	*	1		1			
12	2232-124-001-00	PLATE/FLANGE/HST	*	1					
13	V211-360-802-00	BOLT,SP/M8X20	*	2					
14	3864-225-001-00	LINING/HST	*	2					
15	3747-155-013-10	BRAKE/SLIPPERS/B	*	1					
16	3650-212-001-00	ARM,HST LEVER	*	1					
17	V411-260-014-00	WASHER,PL/M14	*	1					
18	V304-260-014-00	NUT/M14	*	2					
19	1729-662-340-00	SENSOR/ANGLE/110/R	*	1					
20	V120-364-001-00	SCREW,SP/M4X10	*	2					
21	2232-124-004-10	SENSORARM/HSTLEVER	*	1					
22	V360-260-006-00	NUT/WASHER/M6	*	1					
23	2204-124-005-00	CAM/HST/FRONT	*	1					
24	2204-124-006-00	CAM/HST/REAR	*	1					
25	V211-360-802-00	BOLT,SP/M8X20	*	2					
26	V200-260-602-00	BOLT/M6X20	*	1					
27	V200-260-602-50	BOLT/M6X25	*	1					
28	V301-260-006-00	NUT/M6	*	2					
29	3807-836-350-00	SWITCH ASSY	*	1					
30	3807-836-400-00	ACTUATOR ASSY	*	1					

FIG. 14 LEVER(MAIN)SYSTEM(G TYPE)

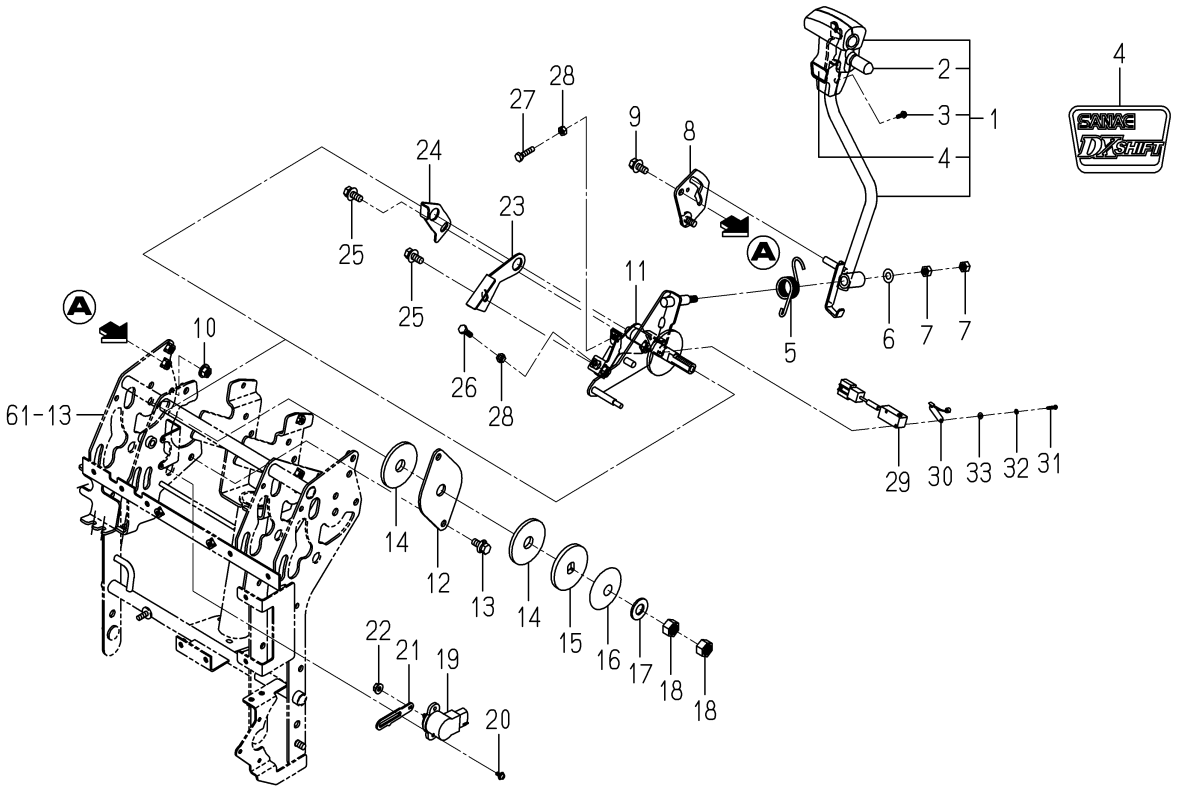

2232-124 -0100

KEY	PART CODE	DESCRIPTION	SPC	TYPE OF MODEL NP60E16		ITC	COL	GRP	REMARKS
31	V111-163-001-60	SCREW/M3X16	*	2					
32	V401-160-003-00	WASHER,SP/M3	*	2					
33	V411-260-003-00	WASHER,PL/M3	*	2					

FIG. 15 LEVER(MAIN)SYSTEM(D TYPE)

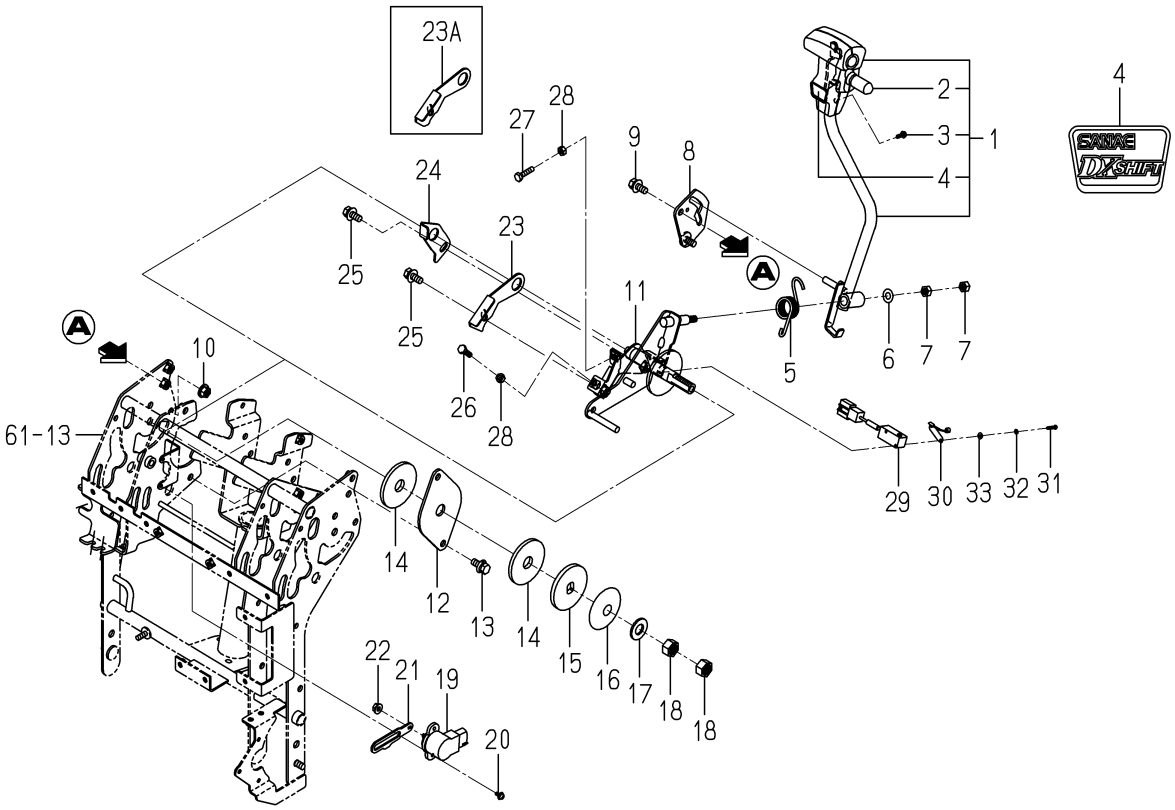

2233-124 -0100

KEY	PART CODE	DESCRIPTION	SPC	TYPE OF MODEL NP60E16		ITC	COL	GRP	REMARKS
1	2232-124-200-20	LEVER/HST/NP SET	*	1					
2	2204-124-631-00	CAP/SWITCH	*	1					
3	V120-376-001-20	SCREW,SP/M6X12	*	2					
4	2232-912-023-00	ORNAMENT/DX/SHIFT	*	1					
5	2232-124-003-00	SPRING/HT025/HST	*	1					
6	V411-260-008-00	WASHER,PL/M8	*	1					
7	V304-260-008-00	NUT/M8	*	2					
8	2232-124-240-00	GUIDE/HST/NP COMP	*	1					
9	V211-360-802-00	BOLT,SP/M8X20	*	1					
10	V362-260-008-00	NUT/WASHER/M8	*	1					
11	2233-124-300-00	CAM/HST/D/NP COMP	*	1					
12	2232-124-001-00	PLATE/FLANGE/HST	*	1					
13	V211-360-802-00	BOLT,SP/M8X20	*	2					
14	3864-225-001-00	LINING/HST	*	2					
15	3747-155-013-10	BRAKE/SLIPPERS/B	*	1					
16	3650-212-001-00	ARM,HST LEVER	*	1					
17	V411-260-014-00	WASHER,PL/M14	*	1					
18	V304-260-014-00	NUT/M14	*	2					
19	1729-662-340-00	SENSOR/ANGLE/110/R	*	1					
20	V120-364-001-00	SCREW,SP/M4X10	*	2					
21	2233-124-004-00	SENSOR ARM/LEVER/HST	*	1					
22	V360-260-006-00	NUT/WASHER/M6	*	1					
23	2233-124-005-00	CAM/HST/FRONT/NP	*	1 -10					
23A	2233-124-005-10	CAM/HST/FRONT/NP	*	1 11-		1			
24	2204-124-006-00	CAM/HST/REAR	*	1					
25	V211-360-802-00	BOLT,SP/M8X20	*	2					
26	V200-260-602-00	BOLT/M6X20	*	1					
27	V200-260-602-50	BOLT/M6X25	*	1					
28	V301-260-006-00	NUT/M6	*	2					
29	3807-836-350-00	SWITCH ASSY	*	1					

FIG. 15 LEVER(MAIN)SYSTEM(D TYPE)

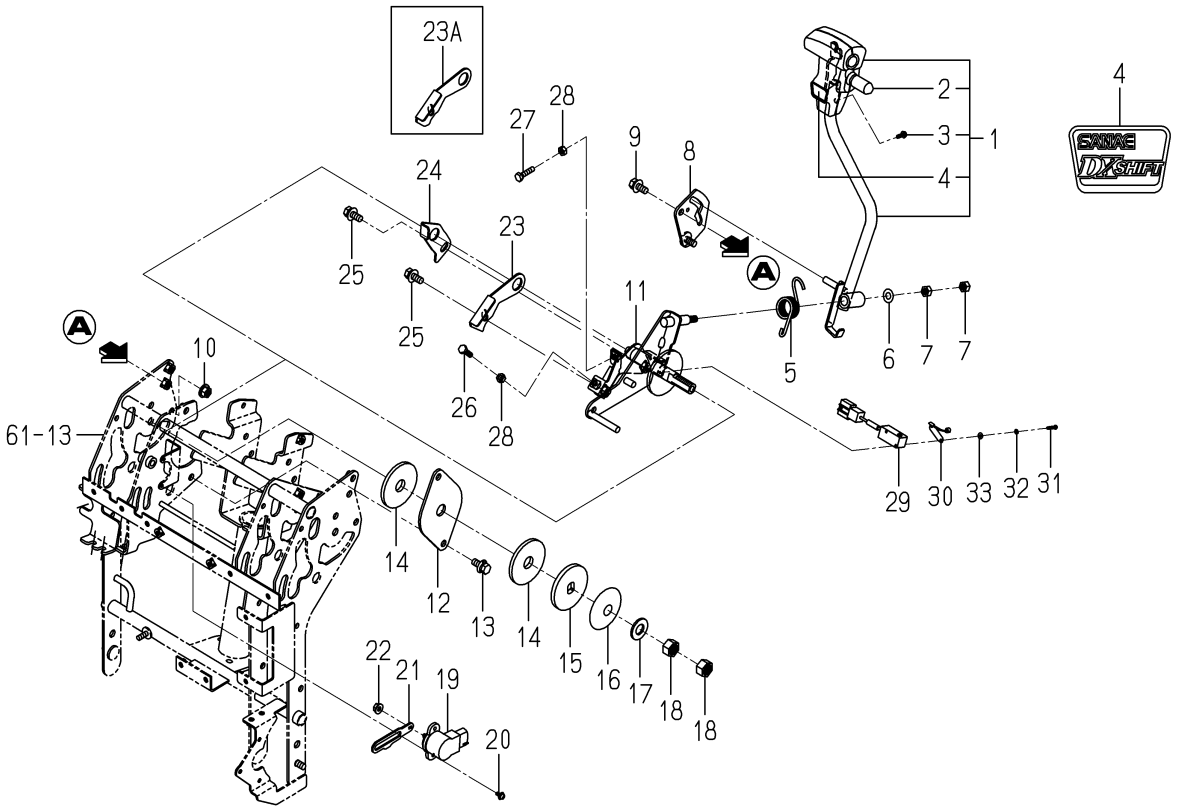

2233-124 -0100

KEY	PART CODE	DESCRIPTION	SPC	TYPE OF MODEL NP60E16		ITC	COL	GRP	REMARKS
30	3807-836-400-00	ACTUATOR ASSY	*	1					
31	V111-163-001-60	SCREW/M3X16	*	2					
32	V401-160-003-00	WASHER,SP/M3	*	2					
33	V411-260-003-00	WASHER,PL/M3	*	2					

FIG. 16 LEVER(SUB)SYSTEM

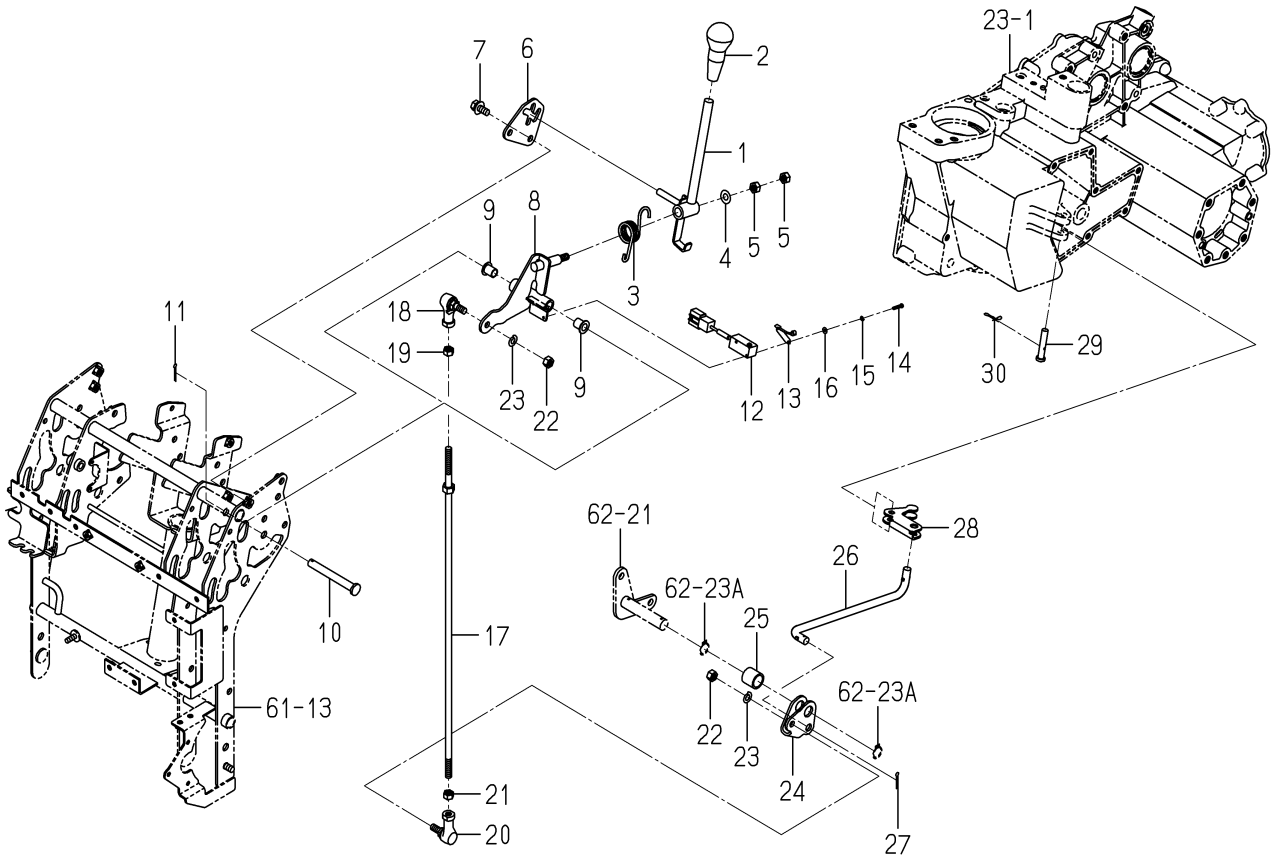

2232-125 -0100

KEY	PART CODE	DESCRIPTION	SPC	TYPE OF MODEL NP60E16		ITC	COL	GRP	REMARKS
1	2232-125-200-00	LEVER/CHANGE/NP COMP	*	1					
2	3103-210-051-00	LEVER/GLIP	*	1					
3	2232-125-006-00	SPRING/HT025/CHANGE	*	1					
4	V411-260-008-00	WASHER,PL/M8	*	1					
5	V304-260-008-00	NUT/M8	*	2					
6	2232-125-001-00	GUIDE/CHANGE/NP	*	1					
7	V211-360-802-00	BOLT,SP/M8X20	*	2					
8	2232-125-250-00	CAM/CHANGE/NP COMP	*	1					
9	1110-401-002-00	BUSH/F/10X12X15	*	2					
10	2178-421-003-00	PIN	*	1					
11	V500-163-002-00	PIN,SPLIT/3X20	*	1					
12	3807-836-350-00	SWITCH ASSY	*	1					
13	3807-836-400-00	ACTUATOR ASSY	*	1					
14	V111-163-001-60	SCREW/M3X16	*	2					
15	V401-160-003-00	WASHER,SP/M3	*	2					
16	V411-260-003-00	WASHER,PL/M3	*	2					
17	2232-125-230-00	ROD/CHANGE/NP COMP	*	1					
18	1560-695-021-00	JOINT BALL M08RH	*	1					
19	V304-260-008-00	NUT/M8	*	1					
20	1560-695-022-00	JOINT BALL M08LH	*	1					
21	1560-132-007-30	NUT/LH/M08	*	1					
22	V304-260-008-00	NUT/M8	*	2					
23	V401-160-008-00	WASHER,SP/M8	*	2					
24	2232-125-007-00	PLATE/COUNTER/CHANGE	*	1					
25	2232-125-009-00	COLLAR/17X22X20	*	1					
26	2232-125-003-00	ROD/CHANGE/LOWER/NP	*	1					
27	V500-163-002-00	PIN,SPLIT/3X20	*	1					
28	2232-125-005-00	SHIFTER/CHANGE/NP	*	1					
29	2232-125-008-00	PIN/08X41	*	1					
30	2161-735-006-00	PIN/STOPPER/8	*	1					

FIG. 17 HST SYSTEM(G TYPE)

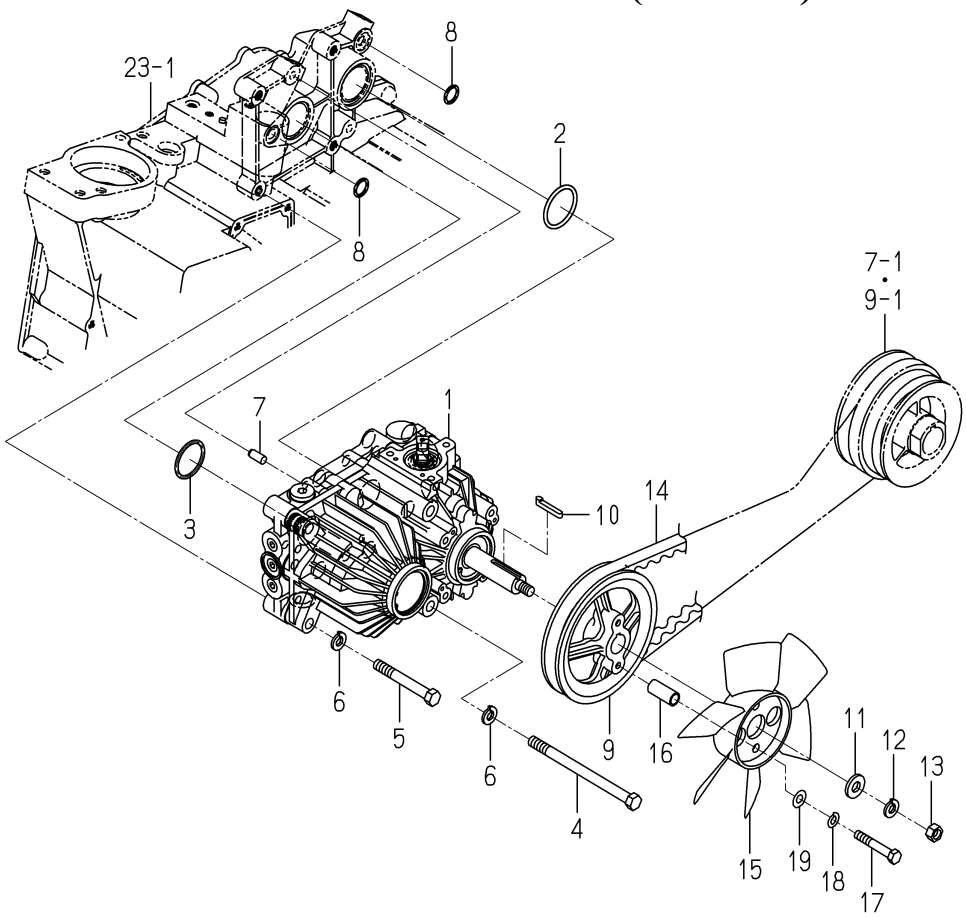

2232-131 -0100

KEY	PART CODE	DESCRIPTION	SPC	TYPE OF MODEL NP60E16		ITC	COL	GRP	REMARKS
1	K510-021-000-20	HST/NP/24 ASSY	*	1					FIG 172
2	V720-103-503-90	O-RING/1A,P39	*	1					
3	V721-103-103-50	O-RING/1A,G35	*	1					
4	V201-261-014-00	BOLT/M10X140	*	2					
5	V201-261-007-50	BOLT/M10X75	*	2					
6	V401-160-010-00	WASHER,SP/M10	*	4					
7	V522-100-801-80	PIN,ST,A/8X18	*	2					
8	V720-102-401-50	O-RING/1A,P15	*	2					
9	2232-131-001-10	PULLEY/VB133/G	*	1					
10	2151-603-003-00	KEY/05X05X35	*	1					
11	1337-721-002-00	WASHER/11X24X3	*	1					
12	V401-160-010-00	WASHER,SP/M10	*	1					
13	V334-260-010-00	NUT/M10	*	1					
14	2232-131-003-00	BELT/VB049	*	1					
15	1725-210-002-00	FAN/HST	*	1					
16	2232-131-005-00	COLOR/11X14X31	*	2					
17	V201-260-805-00	BOLT/M8X50	*	2					
18	V401-160-008-00	WASHER,SP/M8	*	2					
19	V411-260-008-00	WASHER,PL/M8	*	2					

FIG. 18 HST SYSTEM(D TYPE)

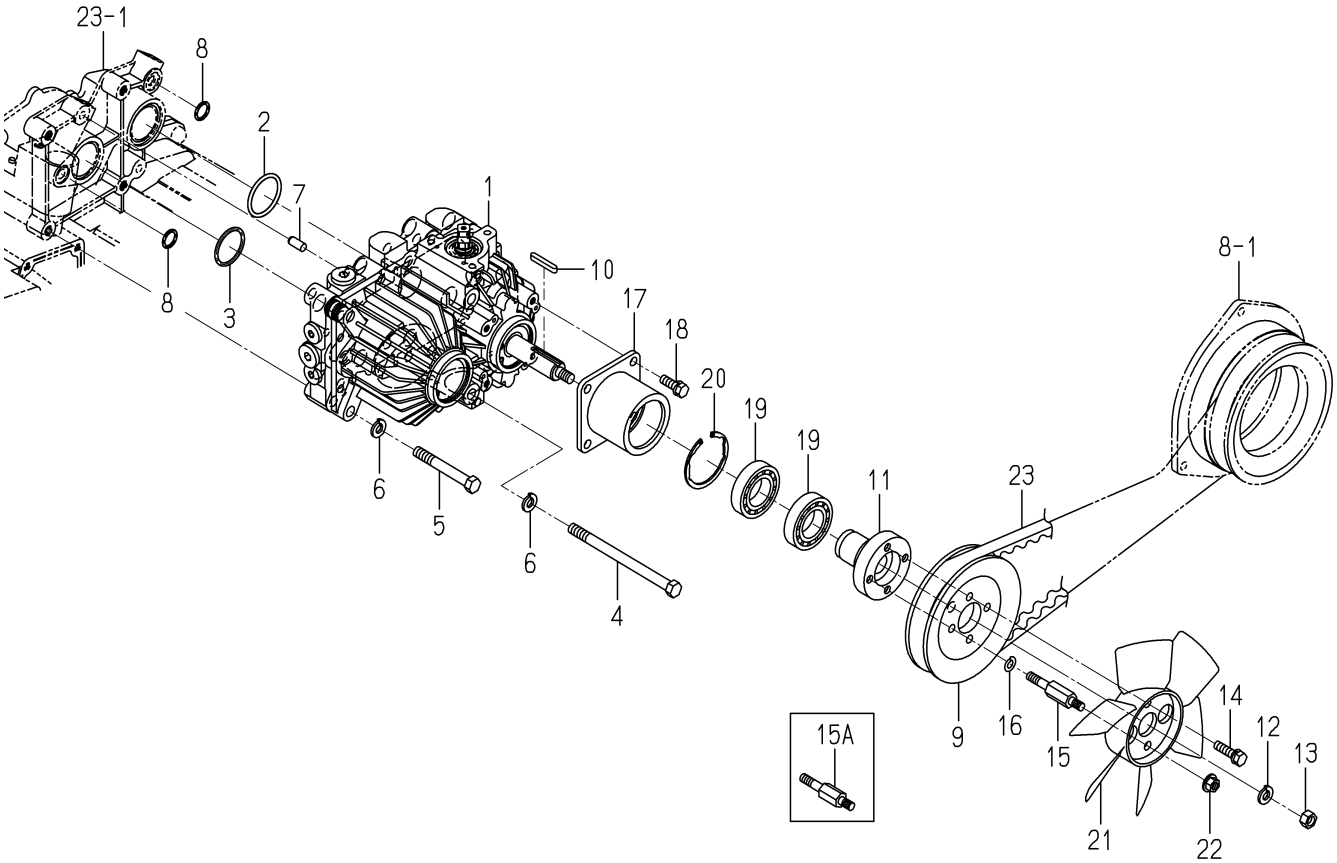

2233-131D-0100

KEY	PART CODE	DESCRIPTION	SPC	TYPE OF MODEL NP60E16		ITC	COL	GRP	REMARKS
1	K510-022-000-00	HST/NP/23 ASSY	*	1					FIG 173
2	V720-103-503-90	O-RING/1A,P39	*	1					
3	V721-103-103-50	O-RING/1A,G35	*	1					
4	V201-261-014-00	BOLT/M10X140	*	2					
5	V201-261-007-50	BOLT/M10X75	*	2					
6	V401-160-010-00	WASHER,SP/M10	*	4					
7	V522-100-801-80	PIN,ST,A/8X18	*	2					
8	V720-102-401-50	O-RING/1A,P15	*	2					
9	2233-131-002-00	PULLEY/VC125	*	1					
10	2178-631-013-00	KEY/05X05X35	*	1					
11	2233-131-004-00	HUB/PULLEY	*	1					
12	V401-160-010-00	WASHER,SP/M10	*	1					
13	V334-260-010-00	NUT/M10	*	1					
14	V211-260-803-00	BOLT,S/M8X30	*	2					
15	2233-131-007-00	BOLT/FAN	*	2 -60					
15A	2233-131-007-10	BOLT/FAN	*	2 61-		1			
16	V401-160-008-00	WASHER,SP/M8	*	2					
17	2233-131-200-00	METAL/HST COMP	*	1					
18	V211-260-802-50	BOLT,S/M8X25	*	4					
19	V600-150-600-60	BEARING,RB/6006SS	*	2					
20	V707-140-055-00	RING,SNAP/R55	*	1					
21	1725-210-002-00	FAN/HST	*	1					
22	V362-260-008-00	NUT/WASHER/M8	*	2					
23	2233-131-006-00	BELT/VC053	*	1					

FIG. 19 LINK(HST)SYSTEM(G TYPE)(1/2)

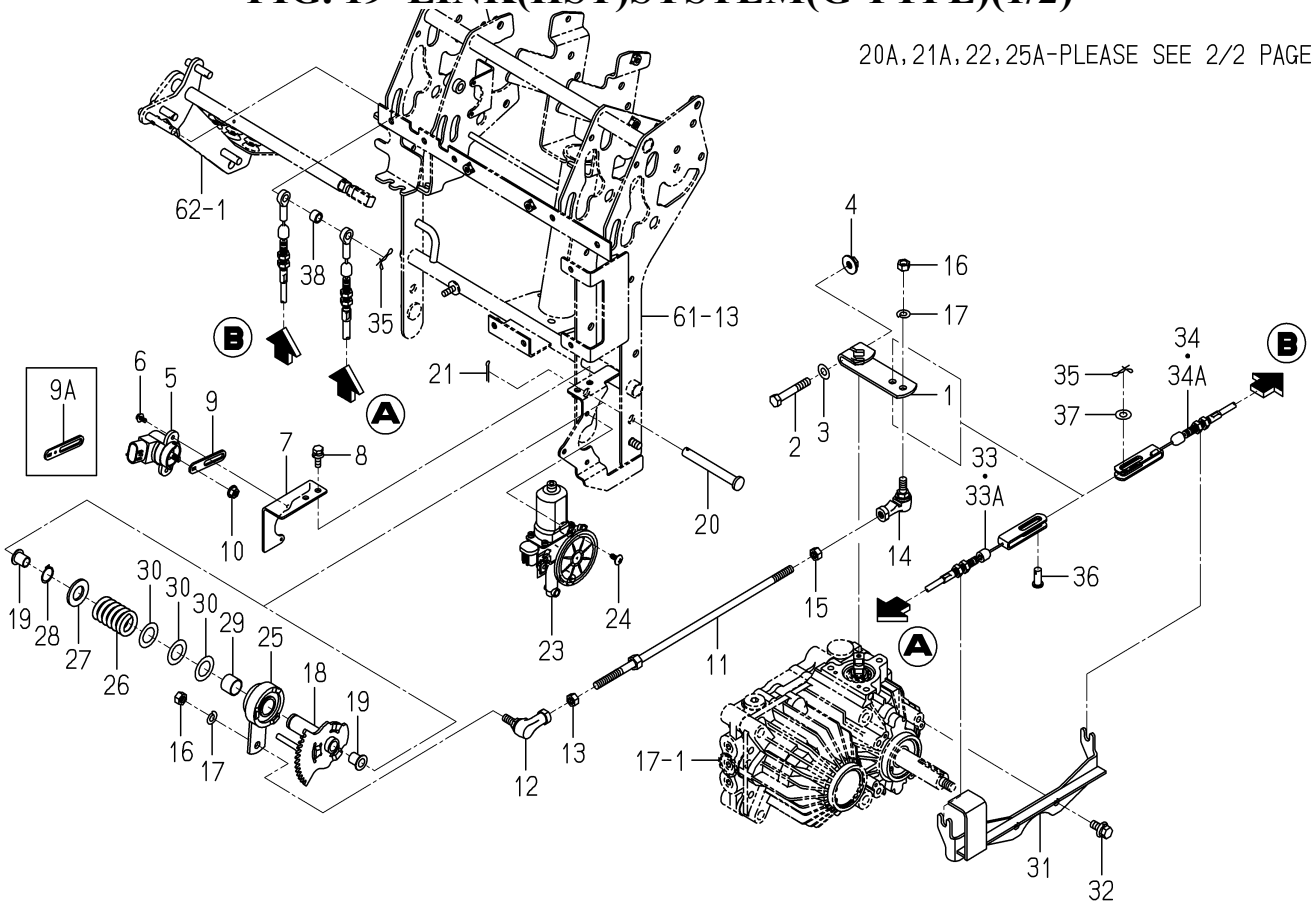

2232-132 -0100

KEY	PART CODE	DESCRIPTION	SPC	TYPE OF MODEL NP60E16		ITC	COL	GRP	REMARKS
1	2232-132-008-00	ARM/TRUNNION/NP	*	1					
2	V201-260-805-00	BOLT/M8X50	*	1					
3	V411-260-008-00	WASHER,PL/M8	*	1					
4	V362-260-008-00	NUT/WASHER/M8	*	1					
5	1729-662-330-00	SENSOR/ANGLE/75 ASSY	*	1					
6	V120-364-001-00	SCREW,SP/M4X10	*	2					
7	2232-132-005-10	PLATE/POTENTIOMETER/	*	1					
8	V210-360-602-00	BOLT,SP/M6X20	*	2					
9	2232-132-004-00	SENSORARM/HST/NP	*	1 -60					
9A	2232-132-004-10	SENSORARM/HST/NP	*	1 61-		1			
10	V360-260-006-00	NUT/WASHER/M6	*	1					
11	2232-132-220-00	ROD/HST/NP COMP	*	1					
12	1560-695-021-00	JOINT BALL M08RH	*	1					
13	V304-260-008-00	NUT/M8	*	1					
14	1560-695-022-00	JOINT BALL M08LH	*	1					
15	1560-132-007-30	NUT/LH/M08	*	1					
16	V304-260-008-00	NUT/M8	*	2					
17	V401-160-008-00	WASHER,SP/M8	*	2					
18	2232-132-210-10	GEAR/HST/NP COMP	*	1					
19	1110-401-002-00	BUSH/F/10X12X15	*	2					
20	2178-421-003-00	PIN	*	1 -1222					
20A	2232-132-280-00	PIN/10X79 COMP	*	1 1223-					
21	V500-163-002-00	PIN,SPLIT/3X20	*	1 -1222					
21A	V210-360-601-60	BOLT,SP/M6X16	*	1 1223-					
22	V360-260-006-00	NUT/WASHER/M6	*	1 1223-					
23	2232-711-270-00	MOTOR/RH ASSY	*	1					
24	3888-726-001-00	TAPPINGSCREW/M5X12	*	3					
25	2232-132-230-00	CLUTCH/HST/NP COMP	*	1 -60					
25A	2232-132-230-20	CLUTCH/HST/NP COMP	*	1 61-		1			
26	2232-132-001-00	SPRING/HC042	*	1					

FIG. 19 LINK(HST)SYSTEM(G TYPE)(2/2)

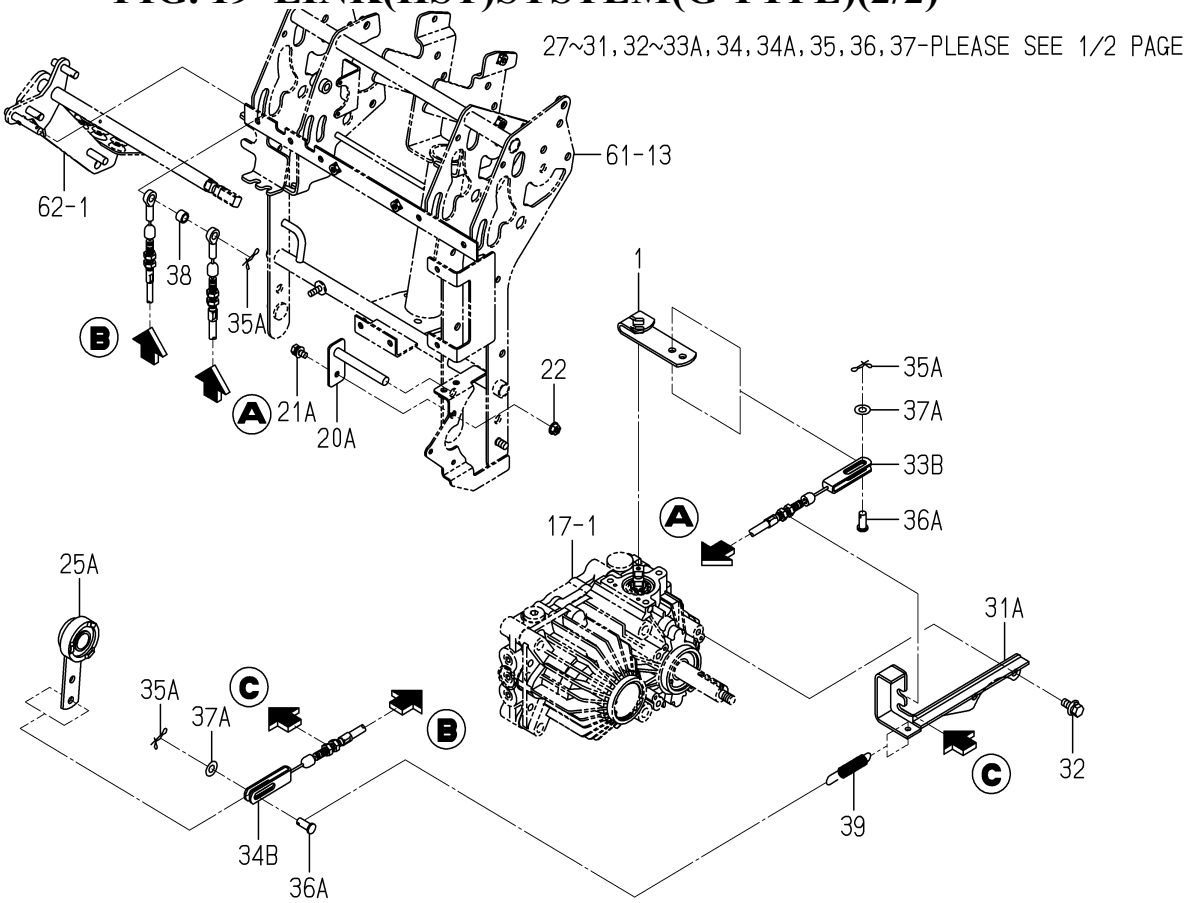

2232-132 -0100

KEY	PART CODE	DESCRIPTION	SPC	TYPE OF MODEL NP60E16		ITC	COL	GRP	REMARKS
27	V411-260-016-00	WASHER,PL/M16	*	1					
28	V704-140-017-00	RING,SNAP/17 C	*	1					
29	2213-701-023-00	BUSH/17X19X15	*	1					
30	3511-203-005-00	SHIM,NEEDLE SHAFT	*	3					
31	2232-132-240-10	PLATE/ADJUSTER/HST	*	1 -60					
31A	2232-132-240-20	PLATE/ADJUSTER/HST	*	1 61-		3			
32	V211-360-802-00	BOLT,SP/M8X20	*	2					
33	2232-132-006-20	CABLE/HST/FORWARD	*	1 -4					
33A	2232-132-006-30	CABLE/HST/FORWARD	*	1 -60		1			
33B	2232-132-006-40	CABLE/HST/FORWARD	*	1 61-		1			
34	2232-132-007-20	CABLE/HST/REVERSE	*	1 -4					
34A	2232-132-007-30	CABLE/HST/REVERSE	*	1 -60		1			
34B	2232-132-007-40	CABLE/HST/REVERSE	*	1 61-		3			
35	2161-735-006-00	PIN/STOPPER/8	*	2 -60					
35A	2161-735-006-00	PIN/STOPPER/8	*	3 61-					
36	3560-203-002-00	PIN,TRIP-HOOK ROD	*	1 -60					
36A	3560-203-002-00	PIN,TRIP-HOOK ROD	*	2 61-					
37	V411-260-008-00	WASHER,PL/M8	*	1 -60					
37A	V411-260-008-00	WASHER,PL/M8	*	2 61-					
38	2232-132-009-00	COLLAR/09X12X09	*	1					
39	2161-615-014-00	SPRING,HE071	*	1 61-					

FIG. 20 LINK(HST)SYSTEM(D BTYPE)(1/2)

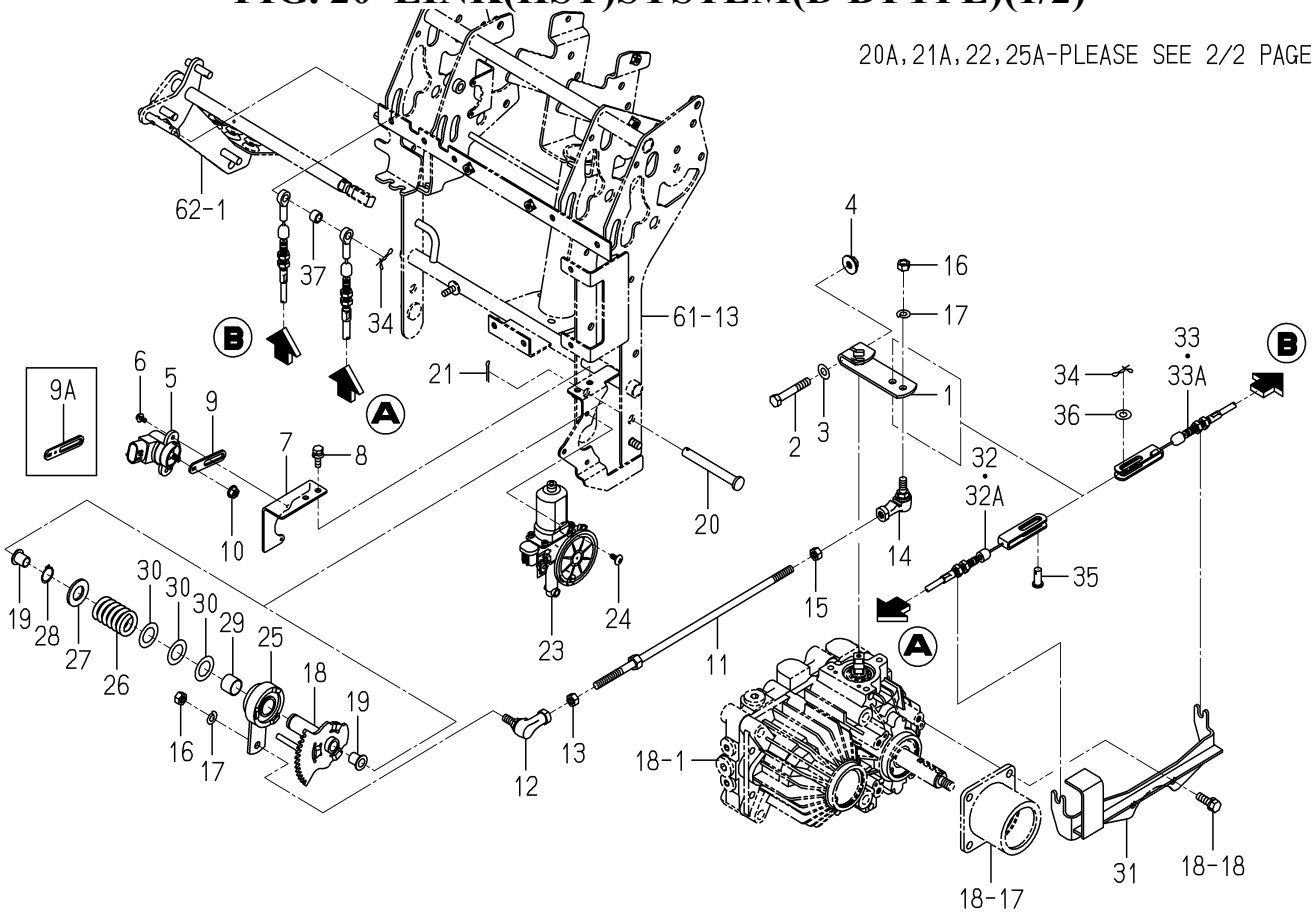

2233-132B-0100

KEY	PART CODE	DESCRIPTION	SPC	TYPE OF MODEL NP60E16		ITC	COL	GRP	REMARKS
1	2232-132-008-00	ARM/TRUNNION/NP	*	1					
2	V201-260-805-00	BOLT/M8X50	*	1					
3	V411-260-008-00	WASHER,PL/M8	*	1					
4	V362-260-008-00	NUT/WASHER/M8	*	1					
5	1729-662-330-00	SENSOR/ANGLE/75 ASSY	*	1					
6	V120-364-001-00	SCREW,SP/M4X10	*	2					
7	2232-132-005-10	PLATE/POTENTIOMETER/	*	1					
8	V210-360-602-00	BOLT,SP/M6X20	*	2					
9	2232-132-004-00	SENSORARM/HST/NP	*	1 -60					
9A	2232-132-004-10	SENSORARM/HST/NP	*	1 61-		1			
10	V360-260-006-00	NUT/WASHER/M6	*	1					
11	2232-132-220-00	ROD/HST/NP COMP	*	1					
12	1560-695-021-00	JOINT BALL M08RH	*	1					
13	V304-260-008-00	NUT/M8	*	1					
14	1560-695-022-00	JOINT BALL M08LH	*	1					
15	1560-132-007-30	NUT/LH/M08	*	1					
16	V304-260-008-00	NUT/M8	*	2					
17	V401-160-008-00	WASHER,SP/M8	*	2					
18	2232-132-210-10	GEAR/HST/NP COMP	*	1					
19	1110-401-002-00	BUSH/F/10X12X15	*	2					
20	2178-421-003-00	PIN	*	1 -1222					
20A	2232-132-280-00	PIN/10X79 COMP	*	1 1223-					
21	V500-163-002-00	PIN,SPLIT/3X20	*	1 -1222					
21A	V210-360-601-60	BOLT,SP/M6X16	*	1 1223-					
22	V360-260-006-00	NUT/WASHER/M6	*	1 1223-					
23	2232-711-270-00	MOTOR/RH ASSY	*	1					
24	3888-726-001-00	TAPPINGSCREW/M5X12	*	3					
25	2232-132-230-00	CLUTCH/HST/NP COMP	*	1 -60					
25A	2232-132-230-20	CLUTCH/HST/NP COMP	*	1 61-		1			
26	2232-132-001-00	SPRING/HC042	*	1					

FIG. 20 LINK(HST)SYSTEM(D BTYPE)(2/2)

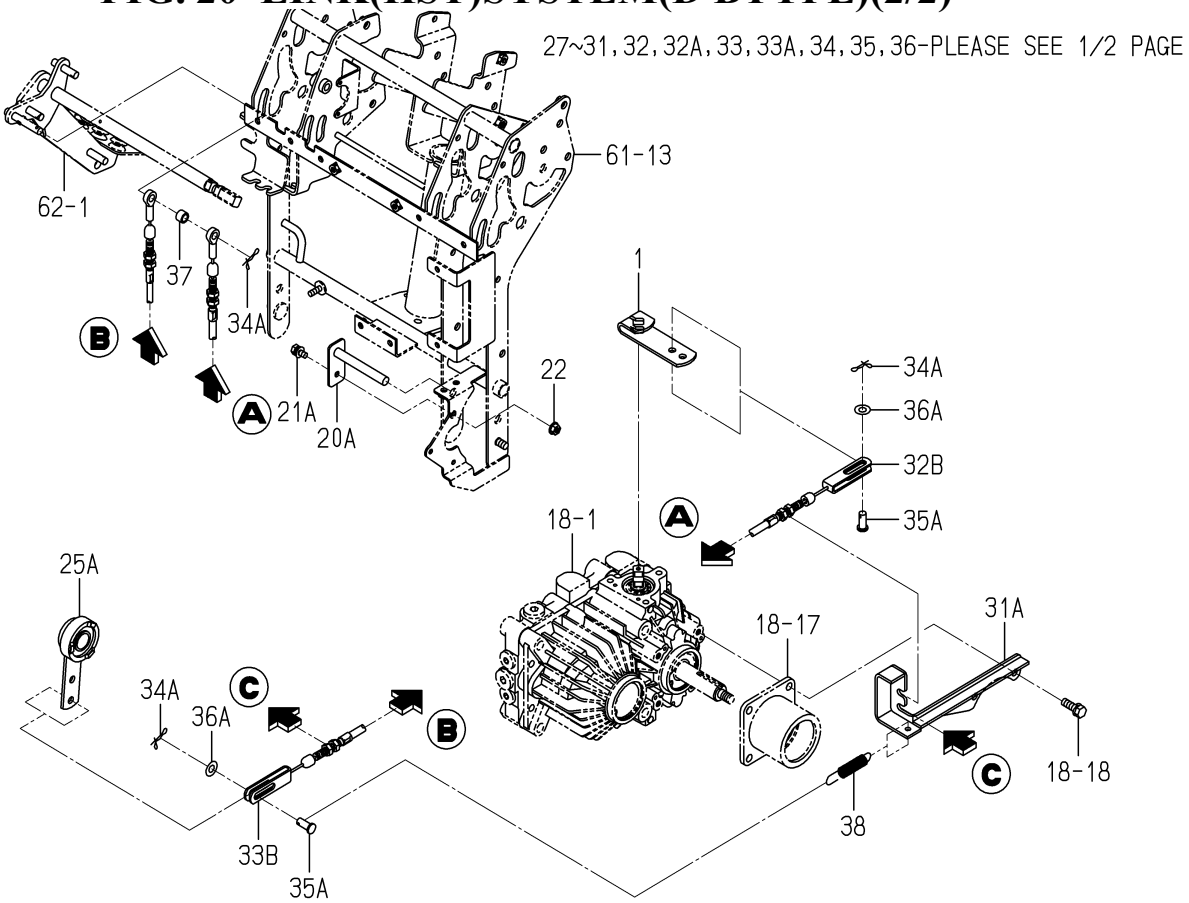

2233-132B-0100

KEY	PART CODE	DESCRIPTION	SPC	TYPE OF MODEL NP60E16		ITC	COL	GRP	REMARKS
27	V411-260-016-00	WASHER,PL/M16	*	1					
28	V704-140-017-00	RING,SNAP/17 C	*	1					
29	2213-701-023-00	BUSH/17X19X15	*	1					
30	3511-203-005-00	SHIM,NEEDLE SHAFT	*	3					
31	2233-132-200-00	PLATE/ADJUSTER/ COMP	*	1 -60					
31A	2232-132-240-20	PLATE/ADJUSTER/HST	*	1 61-					
32	2232-132-006-20	CABLE/HST/FORWARD	*	1 -4					
32A	2232-132-006-30	CABLE/HST/FORWARD	*	1 -60		1			
32B	2232-132-006-40	CABLE/HST/FORWARD	*	1 61-		1			
33	2232-132-007-20	CABLE/HST/REVERSE	*	1 -4					
33A	2232-132-007-30	CABLE/HST/REVERSE	*	1 -60		1			
33B	2232-132-007-40	CABLE/HST/REVERSE	*	1 61-		3			
34	2161-735-006-00	PIN/STOPPER/8	*	2 -60					
34A	2161-735-006-00	PIN/STOPPER/8	*	3 61-					
35	3560-203-002-00	PIN,TRIP-HOOK ROD	*	1 -60					
35A	3560-203-002-00	PIN,TRIP-HOOK ROD	*	2 61-					
36	V411-260-008-00	WASHER,PL/M8	*	1 -60					
36A	V411-260-008-00	WASHER,PL/M8	*	2 61-					
37	2232-132-009-00	COLLAR/09X12X09	*	1					
38	2161-615-014-00	SPRING,HE071	*	1 61-					

FIG. 21 PEDAL(ACCELERATOR)SYSTEM(G TYPE)

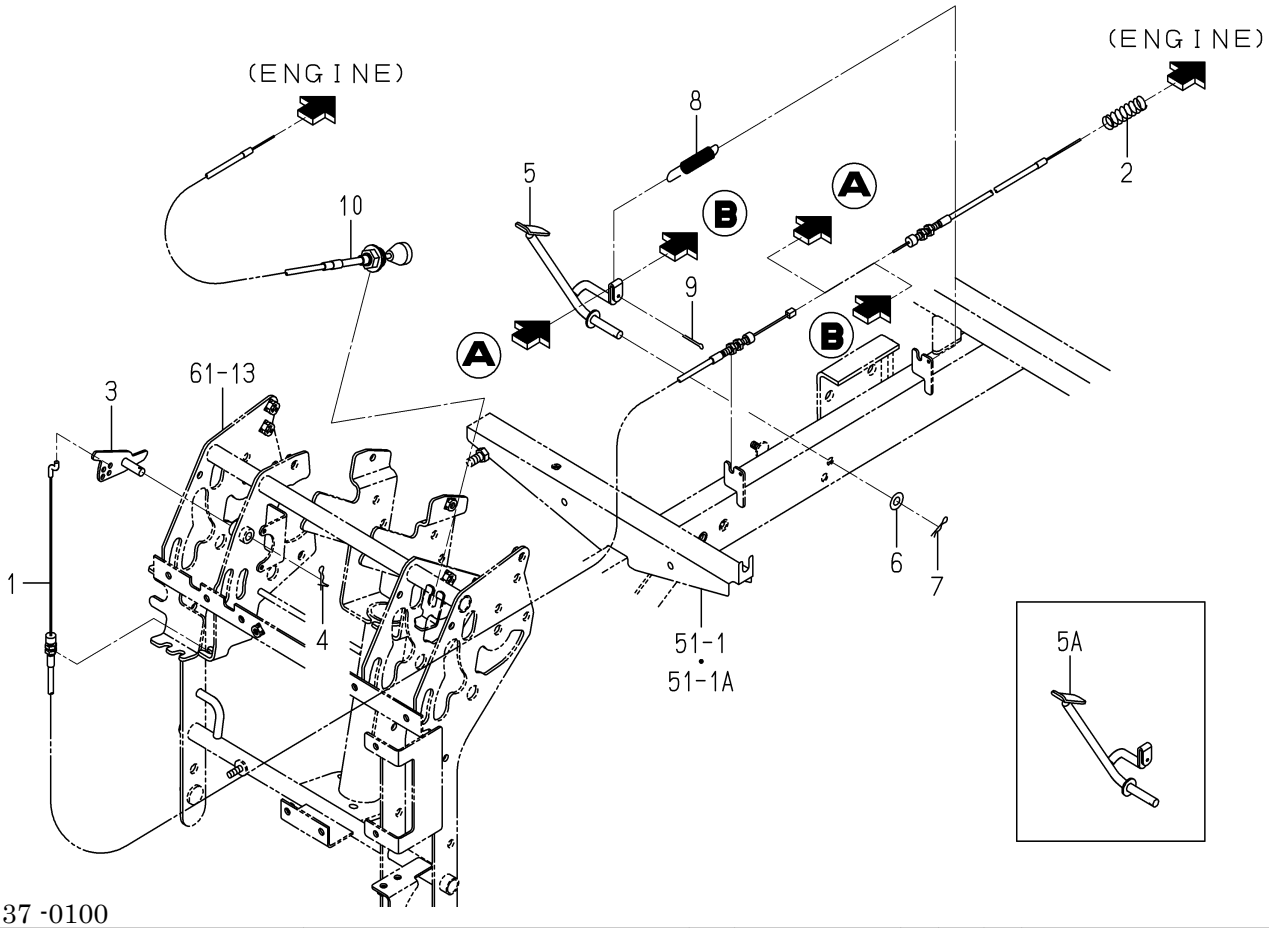

2232-137 -0100

KEY	PART CODE	DESCRIPTION	SPC	TYPE OF MODEL NP60E16		ITC	COL	GRP	REMARKS
1	2232-137-001-10	CABLE/ACCELERATOR/G/	*	1					
2	2171-513-002-00	SPRING/HC050	*	1					
3	2232-137-220-00	ARM/AUTO ACCELERATOR	*	1					
4	2161-735-006-00	PIN/STOPPER/8	*	1					
5	2232-137-200-10	PEDAL/ACCELERATOR/NP	*	1 -60					
5A	2232-137-200-20	PEDAL/ACCELERATOR/NP	*	1 61-		3			
6	V411-260-008-00	WASHER,PL/M8	*	1 -60					
7	3908-170-020-00	PIN/SNAP/08	*	1					
8	2161-615-014-00	SPRING,HE071	*	1					
9	V500-163-002-00	PIN,SPLIT/3X20	*	1					
10	2232-137-006-00	CABLE/CHOKE/G/NP	*	1					

FIG. 22 PEDAL(ACCELERATOR)SYSTEM(D TYPE)

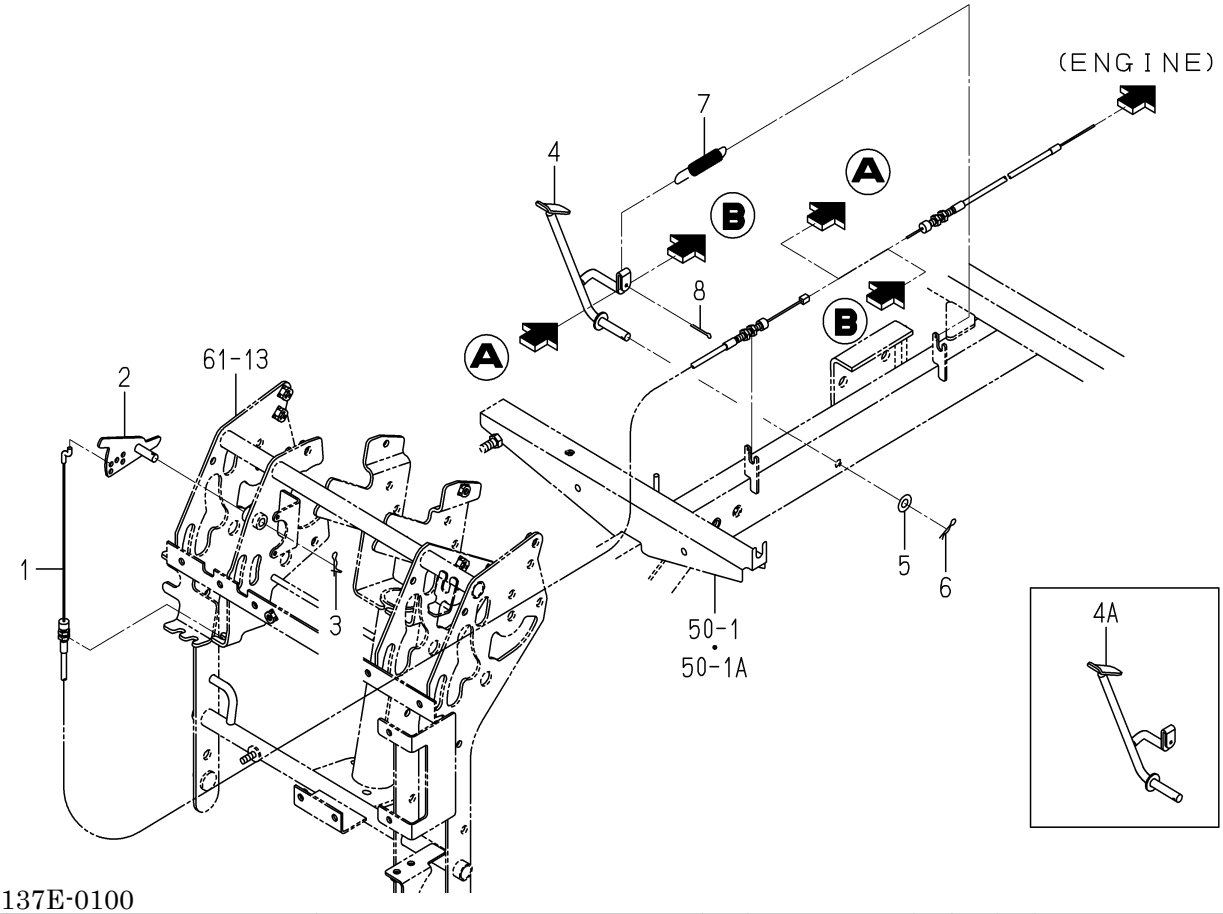

2233-137E-0100

KEY	PART CODE	DESCRIPTION	SPC	TYPE OF MODEL NP60E16		ITC	COL	GRP	REMARKS
1	2233-137-008-00	CABLE/ACCELERATOR/6D	*	1					
2	2233-137-220-00	ARM/AUTO ACCELERATOR	*	1					
3	2161-735-006-00	PIN/STOPPER/8	*	1					
4	2233-137-200-00	PEDAL/ACCELERATOR/D/	*	1 -60					
4A	2233-137-200-10	PEDAL/ACCELERATOR/D/	*	1 61-		3			
5	V411-260-008-00	WASHER,PL/M8	*	1 -60					
6	3908-170-020-00	PIN/SNAP/08	*	1					
7	2161-615-014-00	SPRING,HE071	*	1					
8	V500-163-002-00	PIN,SPLIT/3X20	*	1					

FIG. 23 CASE(TRANSMISSION)SYSTEM

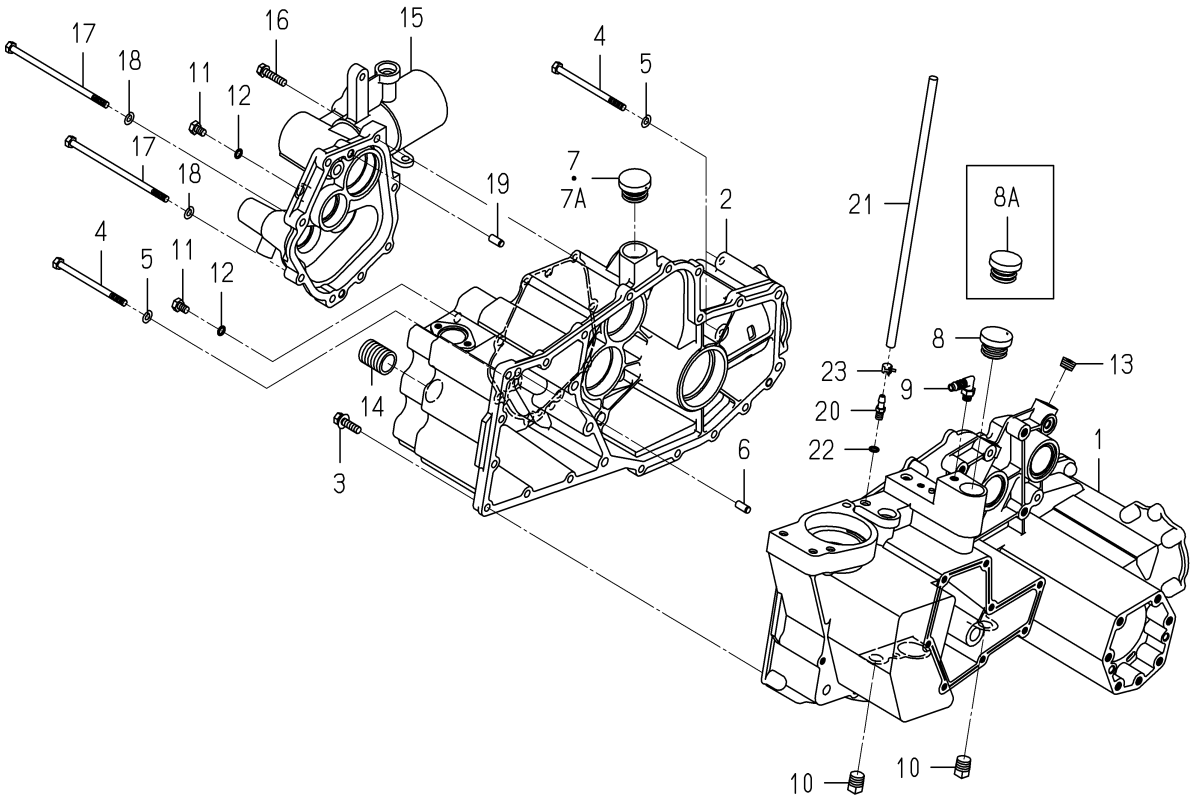

2232-201 -0100

KEY	PART CODE	DESCRIPTION	SPC	TYPE OF MODEL NP60E16		ITC	COL	GRP	REMARKS
1	2232-201-001-50	CASE/TRANSMISSION/LH	*	1		1			
2	2232-201-002-20	CASE/TRANSMISSION/RH	*	1					
3	V211-560-803-00	BOLT,S/M8X30/7T	*	17					
4	2232-201-004-00	BOLT/M8X110	*	3					
5	V401-160-008-00	WASHER,SP/M8	*	3					
6	V522-100-801-80	PIN,ST,A/8X18	*	2					
7	7954-205-101-00	CAP,OIL/30	*	1 -1133					
7A	7954-205-100-00	CAP,OIL/30	*	1 1134-					
8	2204-201-003-00	CAP/35/YELLOW	*	1 -60					
8A	2161-201-001-00	RING/O	*	1 61-					
9	2194-410-006-00	CONNECTOR	*	1					
10	V781-160-000-6B	PLUG/SCREW/SEAL	*	2					
11	2188-201-007-00	BOLT/M8X12	*	2					
12	V720-101-900-80	O-RING/1A,P8	*	2					
13	V780-140-000-6B	PLUG/SCREW/SEAL	*	2					
14	2232-201-006-00	ADAPTERFILTER	*	1					
15	2232-201-003-10	COVER/PLANTINGCLUTCH	*	1					
16	V211-560-803-50	BOLT,S/M8X35/7T	*	6					
17	2232-201-005-00	BOLT/M8X160	*	2					
18	V401-160-008-00	WASHER,SP/M8	*	2					
19	V522-100-801-80	PIN,ST,A/8X18	*	2					
20	2232-201-007-10	CONNECTOR/MINIHALF	*	1					
21	2232-201-008-10	HOSE/650	*	1					
22	V720-101-900-80	O-RING/1A,P8	*	1					
23	J062-104-111-00	CLIP/HOSE/10.4-11.1	*	1					

FIG. 24 SHAFT(INPUT)SYSTEM(G TYPE)

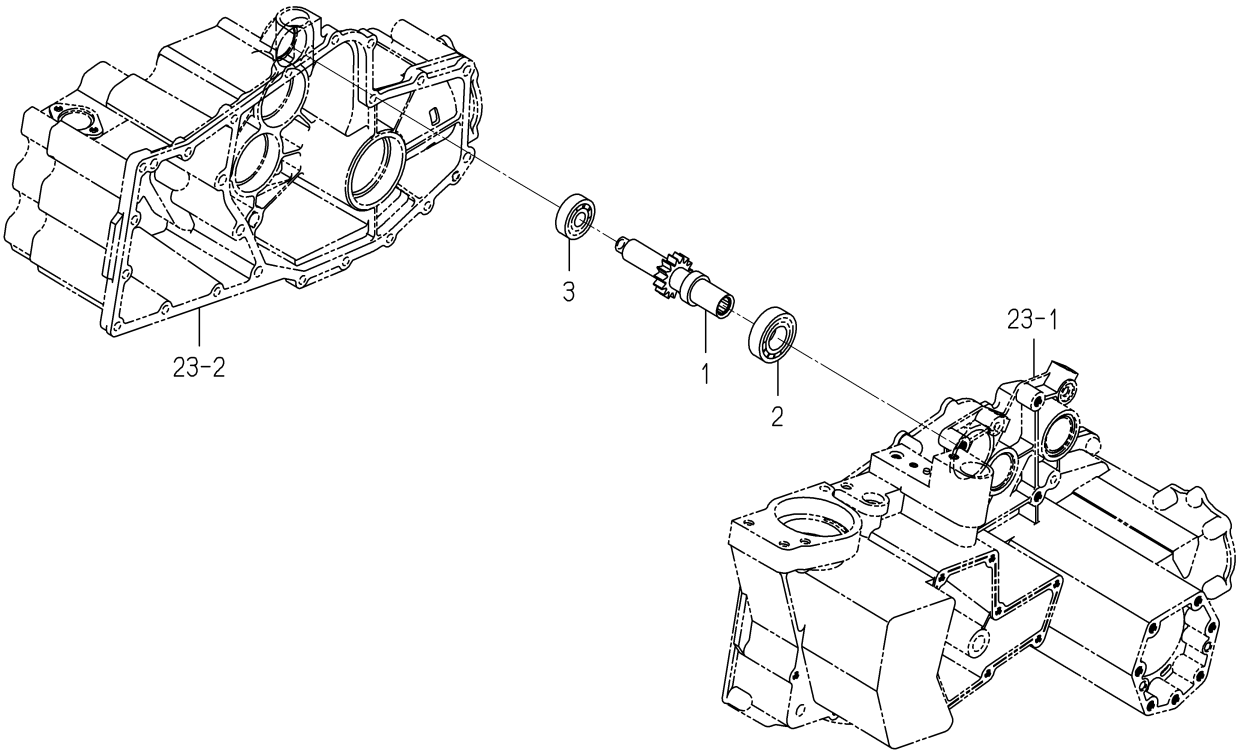

2232-202 -0100

KEY	PART CODE	DESCRIPTION	SPC	TYPE OF MODEL NP60E16		ITC	COL	GRP	REMARKS
1	2232-202-200-10	SHAFT/INPUT COMP	*	1					
2	V600-110-620-50	BEARING,RB/6205	*	1					
3	V600-110-630-20	BEARING,RB/6302	*	1					

FIG. 25 SHAFT(INPUT)SYSTEM(D TYPE)

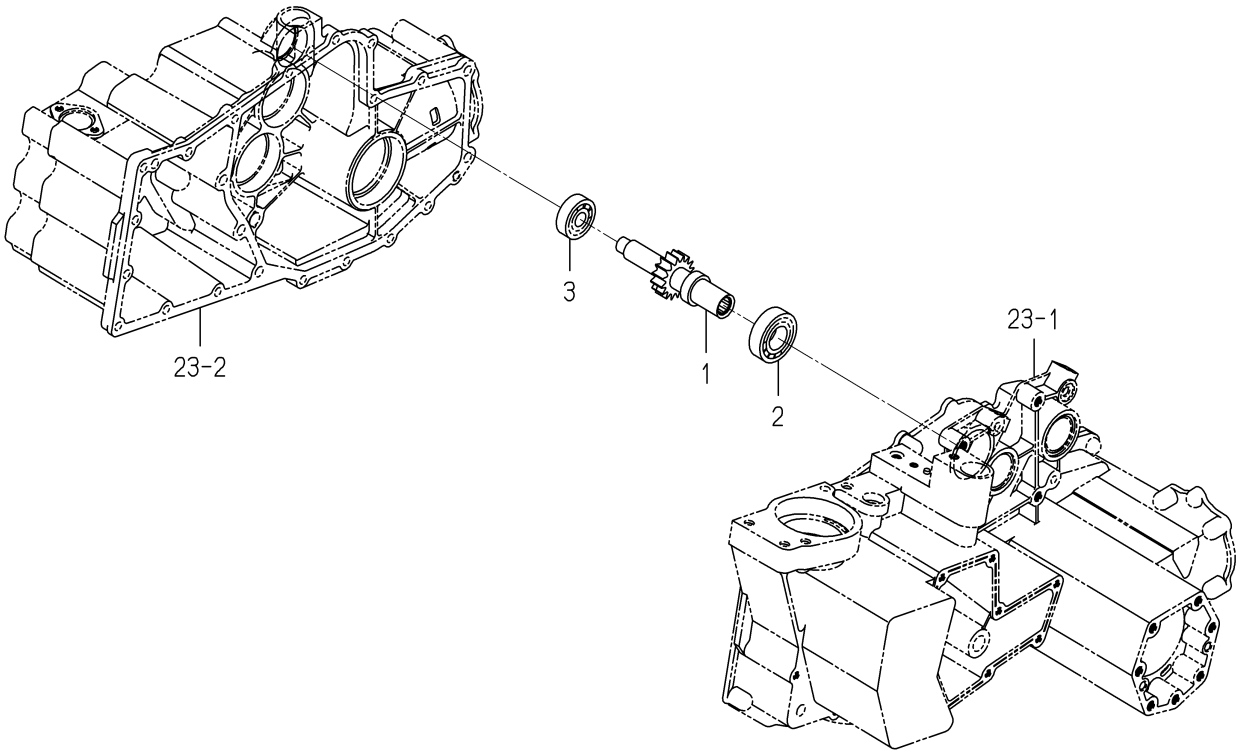

2233-202 -0100

KEY	PART CODE	DESCRIPTION	SPC	TYPE OF MODEL NP60E16		ITC	COL	GRP	REMARKS
1	2233-202-200-00	SHAFT/INPUT/8D COMP	*	1					
2	V600-110-620-50	BEARING,RB/6205	*	1					
3	V600-110-630-20	BEARING,RB/6302	*	1					

FIG. 26 SHAFT(COUNTER)SYSTEM(G TYPE)

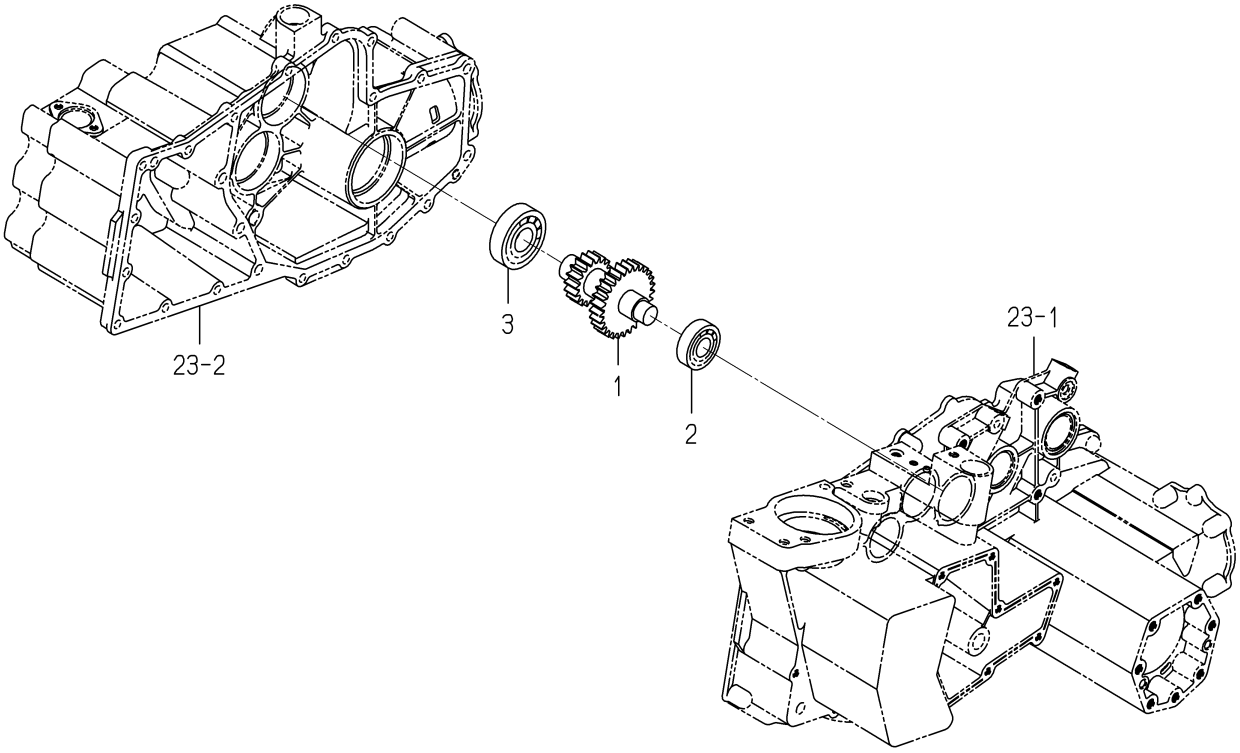

2232-203 -0100

KEY	PART CODE	DESCRIPTION	SPC	TYPE OF MODEL NP60E16		ITC	COL	GRP	REMARKS
1	2232-203-200-10	SHAFT/COUNTER COMP	*	1					
2	V600-110-620-40	BEARING,RB/6204	*	1					
3	V600-110-630-50	BEARING,RB/6305	*	1					

FIG. 27 SHAFT(COUNTER)SYSTEM(D TYPE)

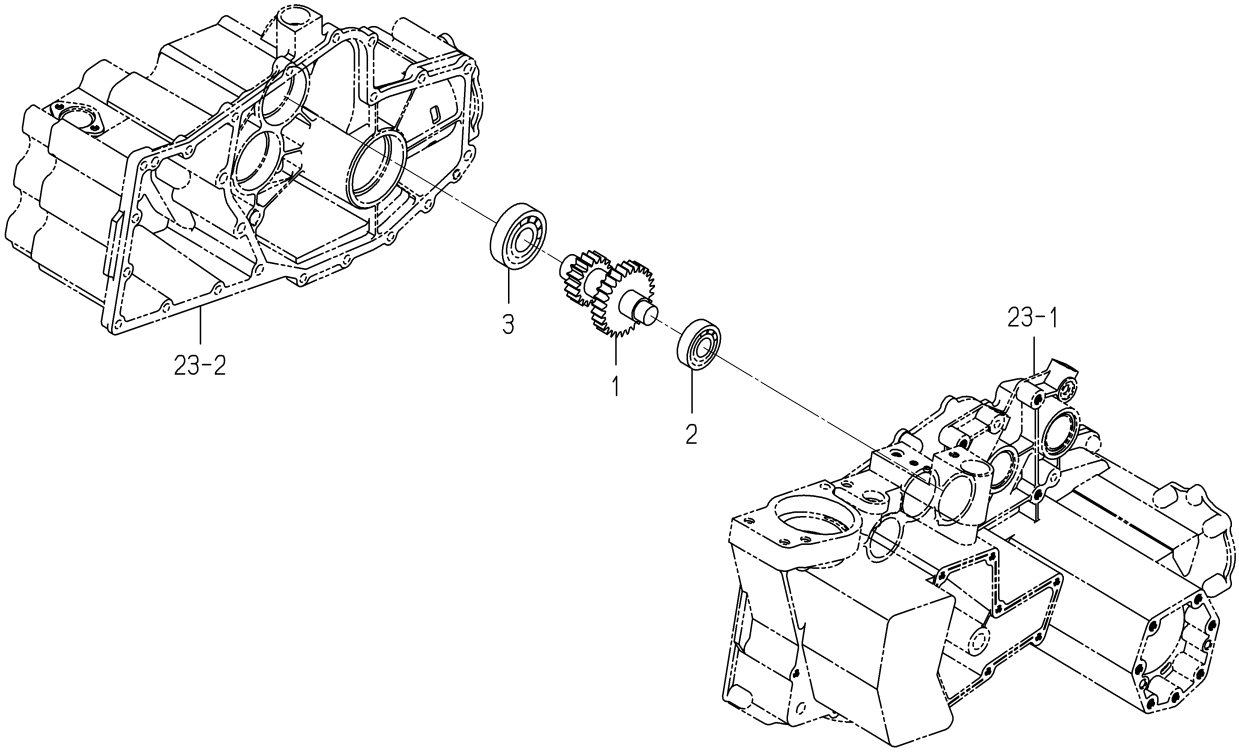

2233-203 -0100

KEY	PART CODE	DESCRIPTION	SPC	TYPE OF MODEL NP60E16		ITC	COL	GRP	REMARKS
1	2233-203-200-00	SHAFT/COUNTER/8 COMP	*	1					
2	V600-110-620-40	BEARING,RB/6204	*	1					
3	V600-110-630-50	BEARING,RB/6305	*	1					

FIG. 28 SHAFT(CHANGE)SYSTEM(G TYPE)

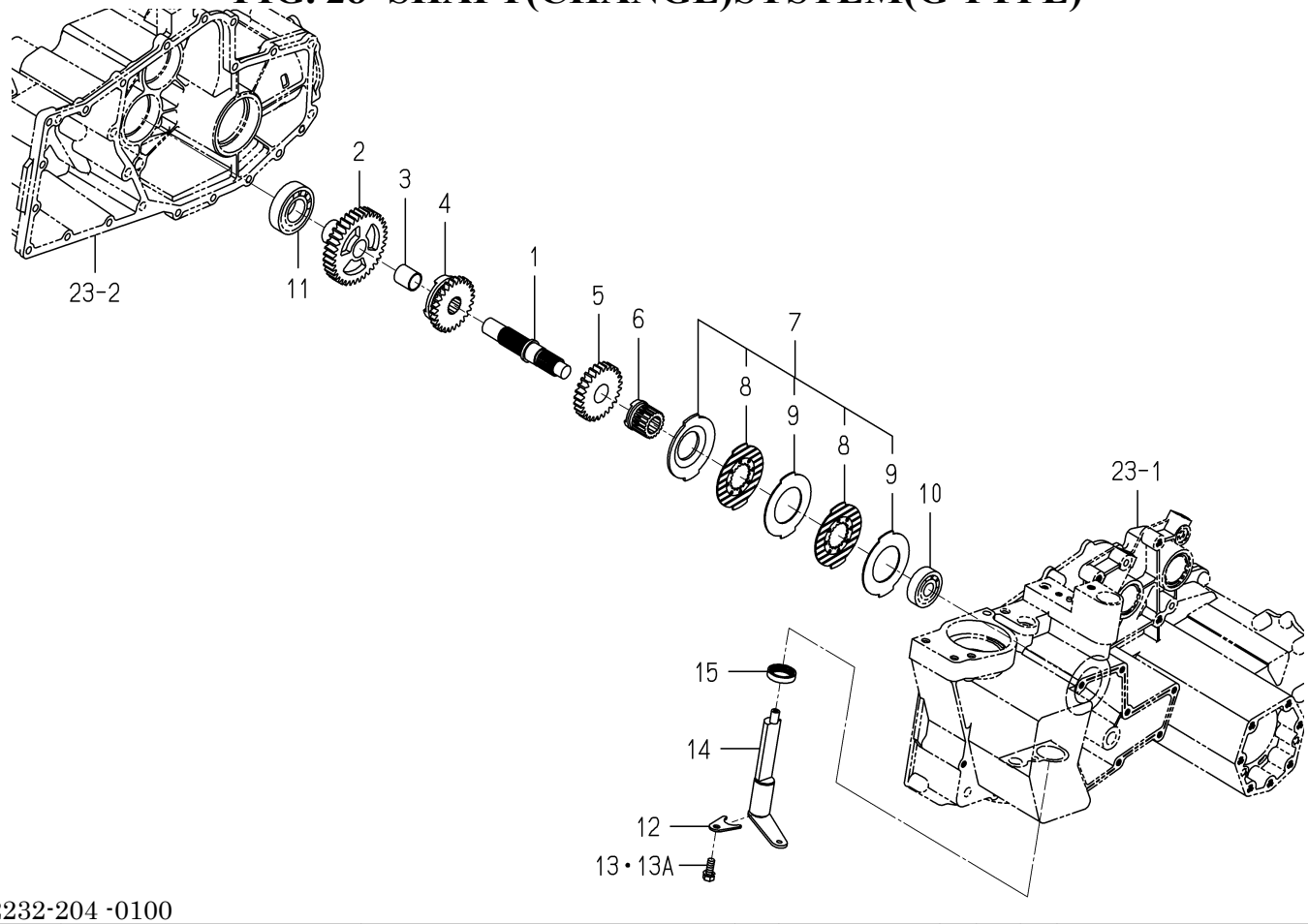

2232-204 -0100

KEY	PART CODE	DESCRIPTION	SPC	TYPE OF MODEL NP60E16		ITC	COL	GRP	REMARKS
1	2232-204-001-20	SHAFT/CHANGE	*	1					
2	2232-204-002-30	GEAR/SPUR/36	*	1					
3	8664-305-201-00	BUSH/20X23X25	*	1					
4	2232-204-004-00	GEAR/SPUR/26	*	1					
5	2232-204-005-00	GEAR/SPUR/26	*	1					
6	2232-204-006-00	HAB/BRAKE	*	1					
7	2213-204-200-00	BRAKE/8 ASSY	*	1					
8	3801-109-222-00	PLATE,DISC	*	2					
9	3801-109-223-00	PLATE,SEPARATER	*	2					
10	V600-110-630-30	BEARING,RB/6303	*	1					
11	V600-110-620-60	BEARING,RB/6206	*	1					
12	2232-204-008-00	PLATE/FOUR BRAKE HOL	*	1					
13	2144-701-021-00	BOLT	*	1 -142					
13A	2144-701-021-10	BOLT/SEAL/M8X16/S	*	1 143-		1			
14	2232-204-210-00	SHAFT/FOUR WHEEL BRA	*	1					
15	V744-125-350-70	SEAL,OIL/TC25357	*	1					

FIG. 29 SHAFT(CHANGE)SYSTEM(D TYPE)

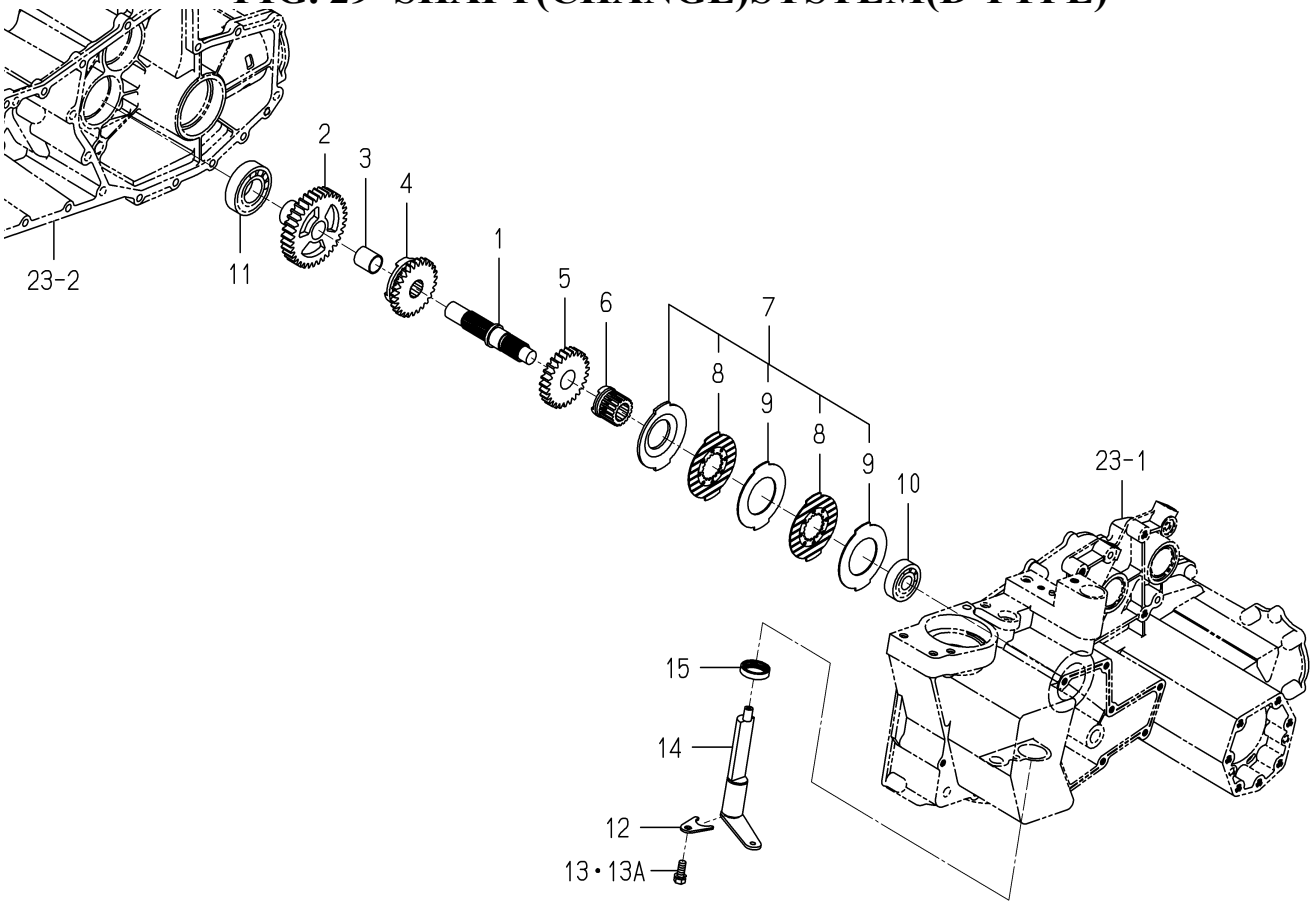

2233-204 -0100

KEY	PART CODE	DESCRIPTION	SPC	TYPE OF MODEL NP60E16		ITC	COL	GRP	REMARKS
1	2232-204-001-20	SHAFT/CHANGE	*	1					
2	2232-204-002-30	GEAR/SPUR/36	*	1					
3	8664-305-201-00	BUSH/20X23X25	*	1					
4	2233-204-001-00	GEAR/SPUR/27	*	1					
5	2232-204-005-00	GEAR/SPUR/26	*	1					
6	2232-204-006-00	HAB/BRAKE	*	1					
7	2213-204-200-00	BRAKE/8 ASSY	*	1					
8	3801-109-222-00	PLATE,DISC	*	2					
9	3801-109-223-00	PLATE,SEPARATER	*	2					
10	V600-110-630-30	BEARING,RB/6303	*	1					
11	V600-110-620-60	BEARING,RB/6206	*	1					
12	2232-204-008-00	PLATE/FOUR BRAKE HOL	*	1					
13	2144-701-021-00	BOLT	*	1 -142					
13A	2144-701-021-10	BOLT/SEAL/M8X16/S	*	1 143-		1			
14	2232-204-210-00	SHAFT/FOUR WHEEL BRA	*	1					
15	V744-125-350-70	SEAL,OIL/TC25357	*	1					

FIG. 30 SHAFT(OUTPUT)SYSTEM(G TYPE)

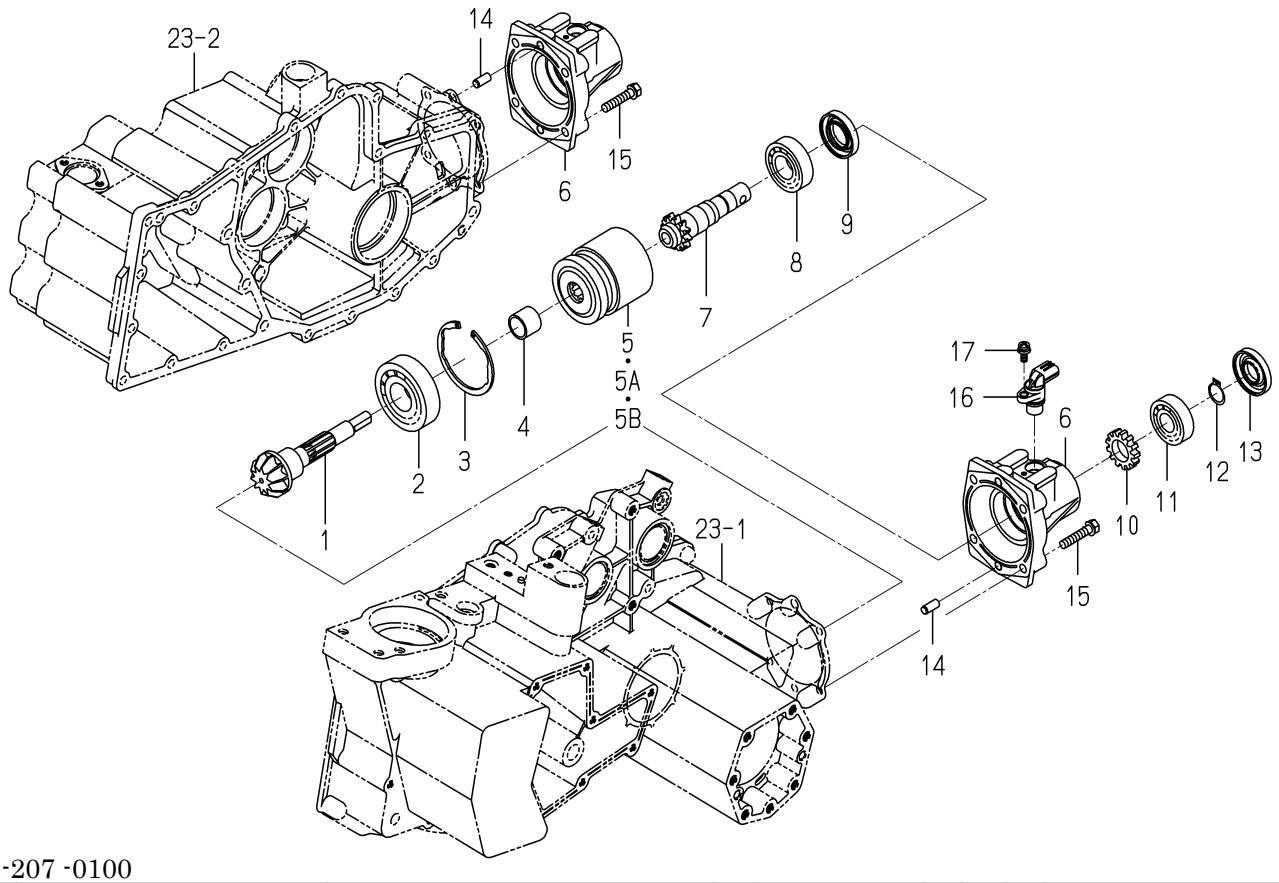

2232-207 -0100

KEY	PART CODE	DESCRIPTION	SPC	TYPE OF MODEL NP60E16		ITC	COL	GRP	REMARKS
1	2232-207-001-00	GEAR/BEVEL/10	*	2					
2	V600-110-630-60	BEARING,RB/6306	*	2					
3	V707-140-072-00	RING,SNAP/R72	*	2					
4	2232-207-004-00	COLLAR/20X25X21	*	2					
5	2232-207-200-00	CLUTCH/NP ASSY	*	2 -60					FIG 176
5A	2232-207-200-10	CLUTCH/NP ASSY	*	2 -630		1			FIG 176
5B	2232-207-200-20	CLUTCH/NP ASSY	*	2 631-		1			FIG 176
6	2204-207-001-10	COVER/CLUTCH	*	2					
7	2232-207-002-20	SHAFT/REARCLUTCH/N	*	2					
8	V600-110-620-50	BEARING,RB/6205	*	2					
9	V744-125-470-80	SEAL,OIL/TC25478	*	2					
10	2204-207-012-30	GEAR/TURN	*	2					
11	V600-110-620-40	BEARING,RB/6204	*	2					
12	V704-140-020-00	RING,SNAP/20 C	*	2					
13	V744-120-470-70	SEAL,OIL/TC20477	*	2					
14	V522-100-801-80	PIN,ST,A/8X18	*	4					
15	V211-260-804-00	BOLT,S/M8X40	*	8					
16	3888-281-200-00	SENSOR/SPEED/GEAR	*	2					
17	V120-265-001-60	SCREW,SEMS/M5X16	*	2					

FIG. 31 SHAFT(OUTPUT)SYSTEM(D TYPE)

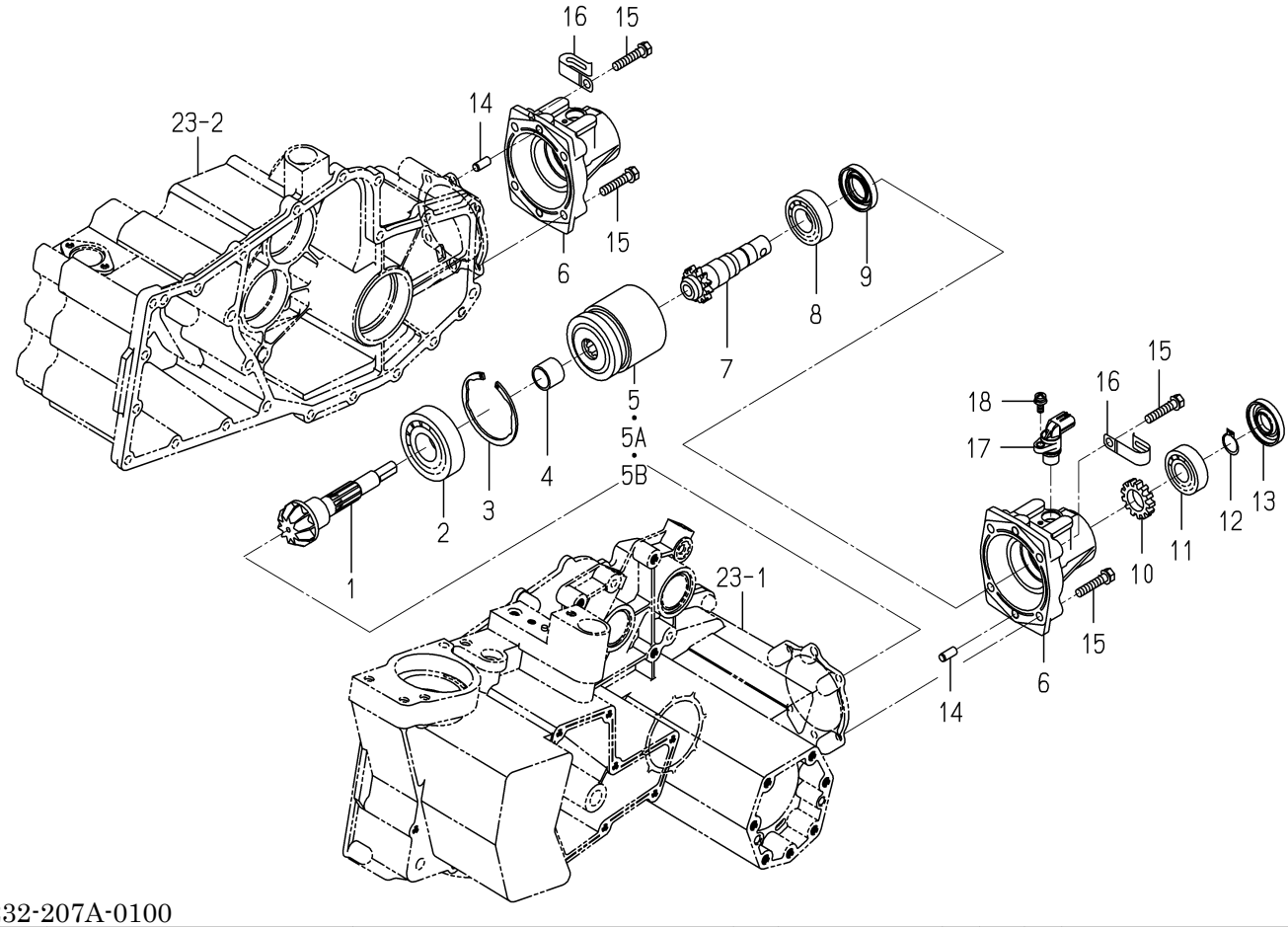

2232-207A-0100

KEY	PART CODE	DESCRIPTION	SPC	TYPE OF MODEL NP60E16		ITC	COL	GRP	REMARKS
1	2232-207-001-00	GEAR/BEVEL/10	*	2					
2	V600-110-630-60	BEARING,RB/6306	*	2					
3	V707-140-072-00	RING,SNAP/R72	*	2					
4	2232-207-004-00	COLLAR/20X25X21	*	2					
5	2233-207-250-00	CLUTCH/NP8 ASSY	*	2 -60					FIG 179
5A	2233-207-250-20	CLUTCH/NP8 ASSY	*	2 -630		1			FIG 179
5B	2233-207-250-30	CLUTCH/NP8 ASSY	*	2 631-		1			FIG 179
6	2204-207-001-10	COVER/CLUTCH	*	2					
7	2232-207-002-20	SHAFT/REARCLUTCH/N	*	2					
8	V600-110-620-50	BEARING,RB/6205	*	2					
9	V744-125-470-80	SEAL,OIL/TC25478	*	2					
10	2204-207-012-30	GEAR/TURN	*	2					
11	V600-110-620-40	BEARING,RB/6204	*	2					
12	V704-140-020-00	RING,SNAP/20 C	*	2					
13	V744-120-470-70	SEAL,OIL/TC20477	*	2					
14	V522-100-801-80	PIN,ST,A/8X18	*	4					
15	V211-260-804-00	BOLT,S/M8X40	*	8					
16	1425-621-004-00	HOLDER/JE/9-9	*	2					
17	3888-281-200-00	SENSOR/SPEED/GEAR	*	2					
18	V120-265-001-60	SCREW,SEMS/M5X16	*	2					

FIG. 32 SHAFT(DRIVE/FRONT)SYSTEM

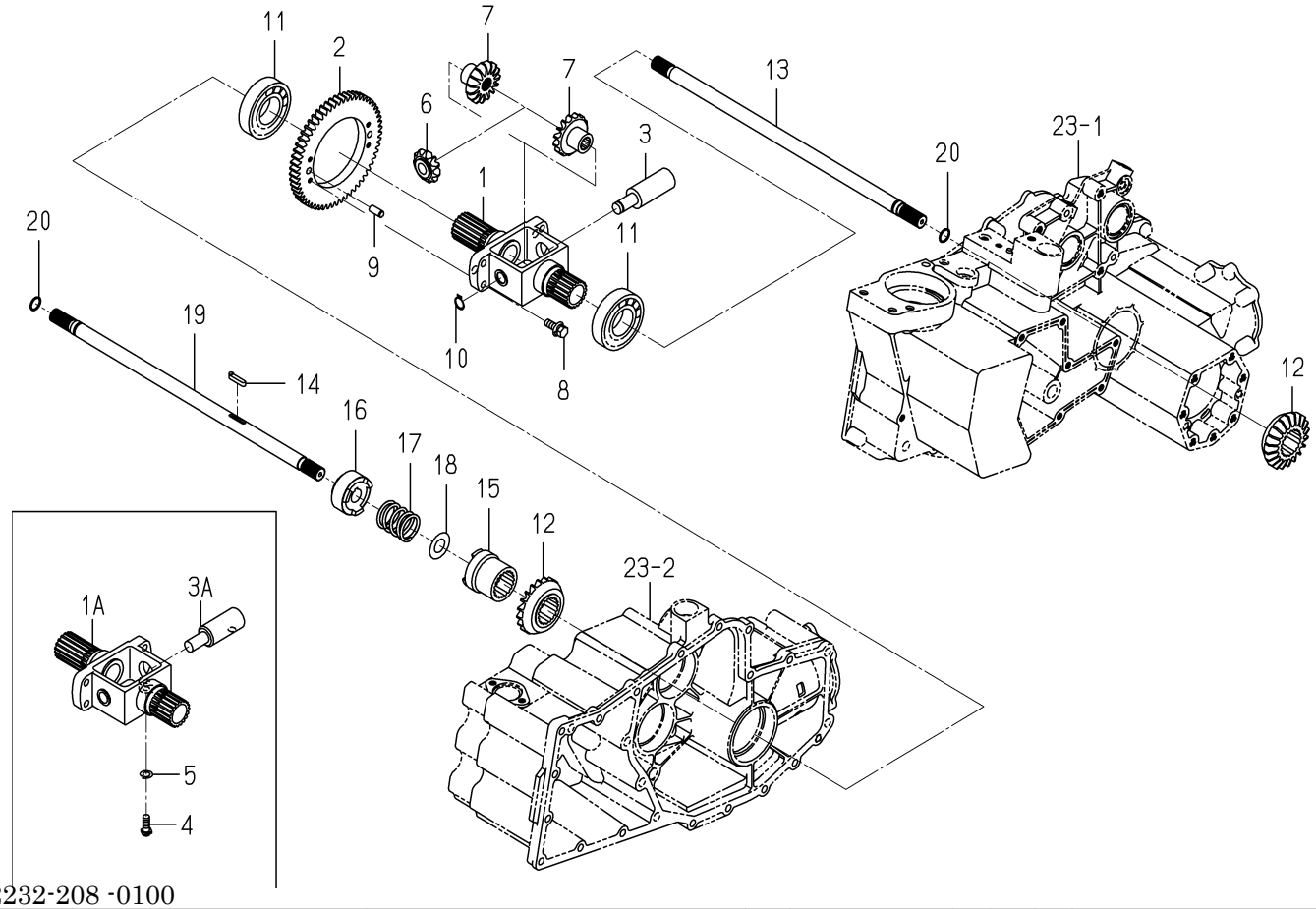

2232-208 -0100

KEY	PART CODE	DESCRIPTION	SPC	TYPE OF MODEL NP60E16		ITC	COL	GRP	REMARKS
1	2232-208-001-20	FRONT/DIFFCASE	*	1 -630					
1A	2232-208-001-40	FRONT/DIFFCASE	*	1 631-		1			
2	2232-208-009-10	GEAR/SUPER/58	*	1					
3	2232-208-011-10	SHAFT/DIFF	*	1 -630		1			
3A	2232-208-011-30	SHAFT/DIFF	*	1 631-		1			
4	2232-208-014-00	BOLT/SHAFT/DIFF	*	1 631-					
5	V401-160-008-00	WASHER,SP/M8	*	1 631-					
6	2204-208-007-20	GEAR/BEVEL/11	*	1					
7	2204-208-002-10	GEAR/BEVEL/15	*	2					
8	V211-560-802-50	BOLT,S/M8X25/7T	*	4					
9	V522-100-801-80	PIN,ST,A/8X18	*	2					
10	V704-140-014-00	RING,SNAP/14 C	*	1 -630					
11	V600-110-620-70	BEARING,RB/6207	*	2					
12	2232-208-006-00	GEAR/BEVEL/20	*	2					
13	2232-208-007-00	SHAFT/FRONTDRIVE/LH	*	1					
14	2204-208-018-00	KEY/05X05X26	*	1					
15	2232-208-005-10	HUB/DIFF/DRIVE	*	1					
16	2232-208-003-00	CLUTCH/DIFFLOCK	*	1					
17	2232-208-002-00	SPRING/HC041	*	1					
18	2232-208-004-00	WASHER/18X34X02	*	1					
19	2232-208-008-00	SHAFT/FRONTDRIVE/RH	*	1					
20	V723-101-501-50	O-RING/1A,S15	*	2					

FIG. 33 SHAFT(DRIVE/PLANTING)SYSTEM(G TYPE)

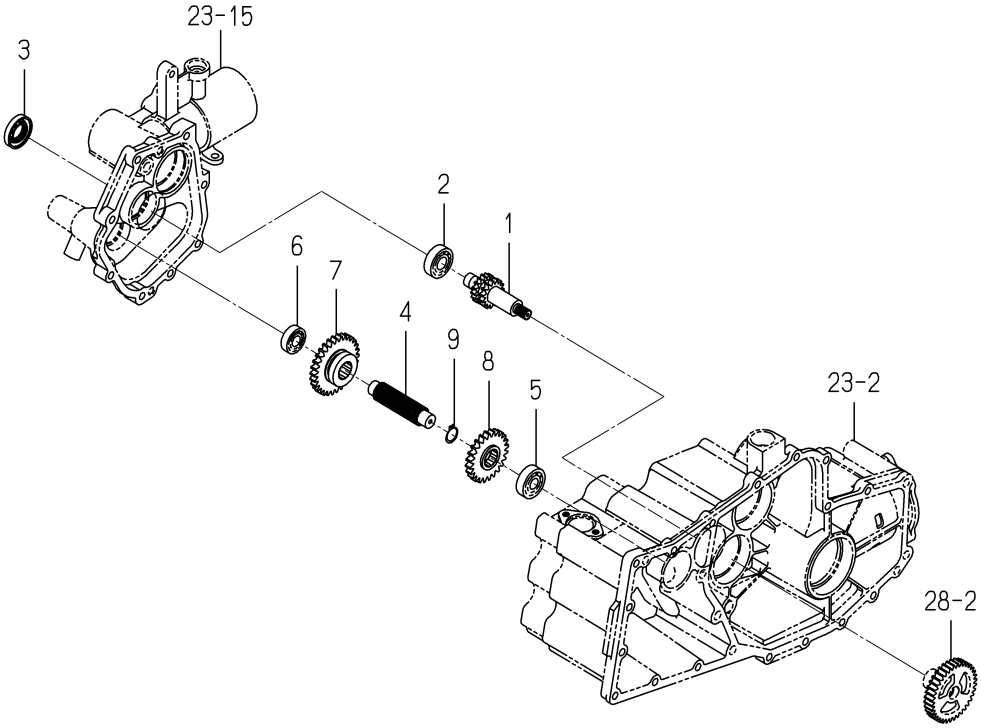

2232-209 -0100

KEY	PART CODE	DESCRIPTION	SPC	TYPE OF MODEL NP60E16		ITC	COL	GRP	REMARKS
1	2232-209-007-00	GEAR/SPUR/15-17	*	1					
2	V600-110-620-40	BEARING,RB/6204	*	1					
3	V744-120-400-70	SEAL,OIL/TC20407	*	1					
4	2232-209-001-10	SHAFT/CHANGE/SUB	*	1					
5	V600-110-630-30	BEARING,RB/6303	*	1					
6	V600-110-620-30	BEARING,RB/6203	*	1					
7	2232-209-005-00	GEAR/SPUR/30	*	1					
8	2232-209-006-00	GEAR/SPUR/24	*	1					
9	V704-140-022-00	RING,SNAP/22 C	*	1					

FIG. 34 SHAFT(DRIVE/PLANTING)SYSTEM(D TYPE)

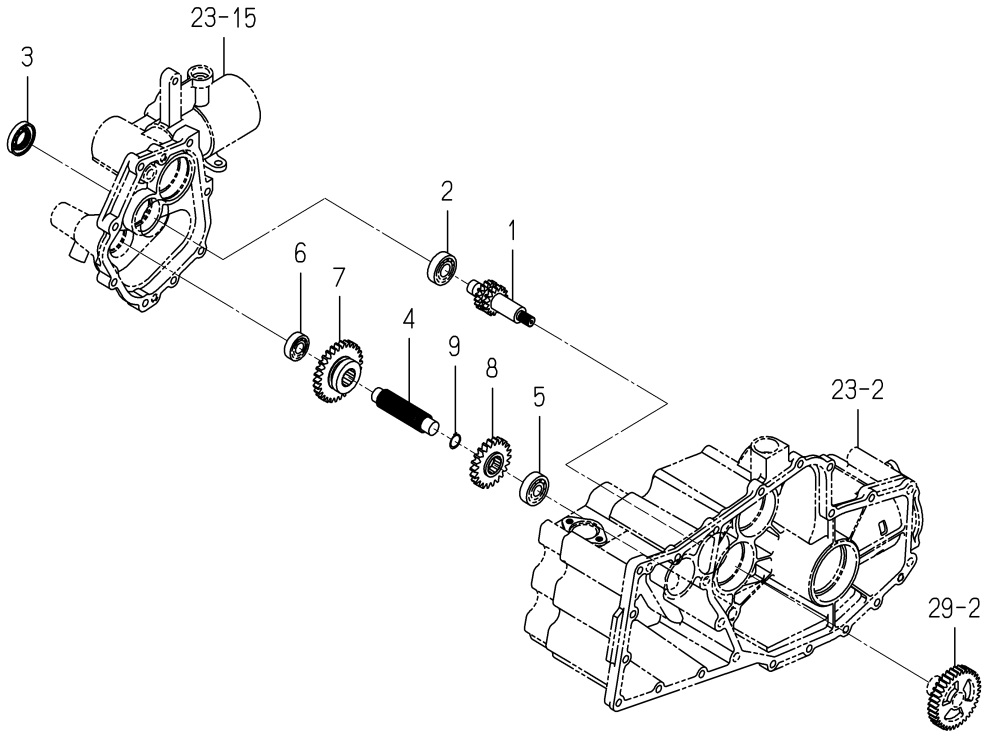

2233-209 -0100

KEY	PART CODE	DESCRIPTION	SPC	TYPE OF MODEL NP60E16		ITC	COL	GRP	REMARKS
1	2232-209-007-00	GEAR/SPUR/15-17	*	1					
2	V600-110-620-40	BEARING,RB/6204	*	1					
3	V744-120-400-70	SEAL,OIL/TC20407	*	1					
4	2232-209-001-10	SHAFT/CHANGE/SUB	*	1					
5	V600-110-630-30	BEARING,RB/6303	*	1					
6	V600-110-620-30	BEARING,RB/6203	*	1					
7	2232-209-005-00	GEAR/SPUR/30	*	1					
8	2233-209-001-00	GEAR/SPUR/22	*	1					
9	V704-140-022-00	RING,SNAP/22 C	*	1					

FIG. 35 SHAFT(PLANTING INTERVAL,PLANTING/ OUTPUT)SYSTEM(G TYPE)

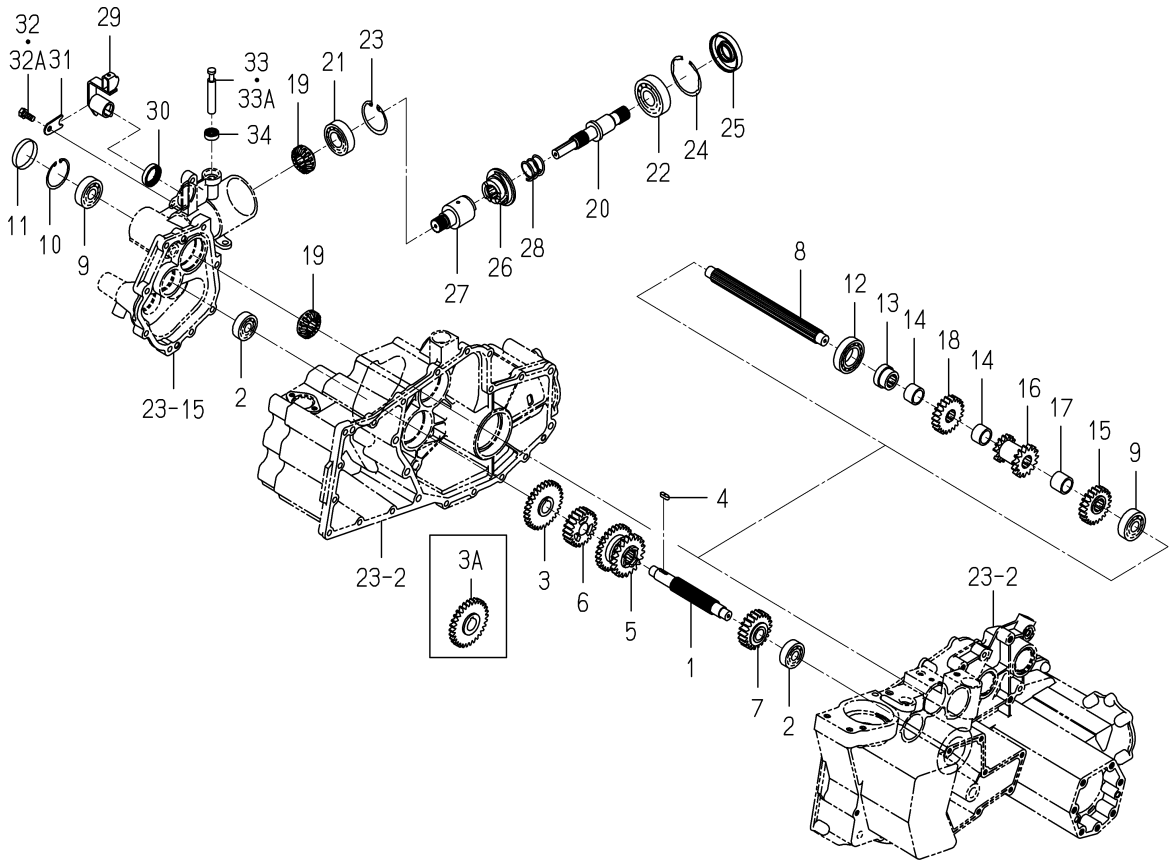

2232-211 -0100

KEY	PART CODE	DESCRIPTION	SPC	TYPE OF MODEL NP60E16		ITC	COL	GRP	REMARKS
1	2232-211-001-20	SHAFT/CHANGE	*	1		3			
2	V600-110-630-20	BEARING,RB/6302	*	2					
3	2232-211-210-10	GEAR/SPUR/30 COMP	*	1 -60		3			
3A	2232-211-210-20	GEAR/SPUR/30 COMP	*	1 61-		1			
4	2232-211-038-00	KEY/06X06X18	*	1					
5	2232-211-003-00	GEAR/SPUR/21-28	*	1					
6	2232-211-004-00	GEAR/SPARSE PLANTING	*	1					
7	2232-211-005-00	GEAR/SPARSE PLANTING	*	1					
8	2232-211-006-20	SHAFT/DRIVEN	*	1					
9	V600-110-630-30	BEARING,RB/6303	*	2					
10	V705-140-047-00	RING,SNAP/47 C	*	1					
11	2194-701-010-00	PLUG/47	*	1					
12	V600-110-600-60	BEARING,RB/6006	*	1					
13	2232-211-035-00	HUB/PLANTING/DRIVEN	*	1					
14	2232-211-033-10	COLOR/21X27X18	*	2					
15	2232-211-018-00	GEAR/SPARSE PLANTING	*	1					
16	2232-211-007-00	GEAR/SPUR/15-15	*	1					
17	2232-211-034-00	COLOR/21X27X23	*	1					
18	2232-211-017-00	GEAR/SPARSE PLANTING	*	1					
19	2232-211-024-00	GEAR/BEVEL/15/NP	*	2					
20	2232-211-015-10	SHAFT/PLANT/OUT	*	1					
21	V600-110-620-50	BEARING,RB/6205	*	1					
22	V600-110-630-50	BEARING,RB/6305	*	1					
23	V705-140-052-00	RING,SNAP/52 C	*	1					
24	V707-140-062-00	RING,SNAP/R62	*	1					
25	8595-201-025-00	SEAL/OIL	*	1					
26	2232-211-013-00	CLUTCH/PLANTING	*	1					
27	2232-211-014-10	CLUCH/PLANTER/DRIVE	*	1					
28	2180-203-002-00	SPRING/HC028	*	1					
29	2232-211-200-10	SHIFTER/CLUTCH/REVER	*	1					

FIG. 35 SHAFT(PLANTING INTERVAL,PLANTING/ OUTPUT)SYSTEM(G TYPE)

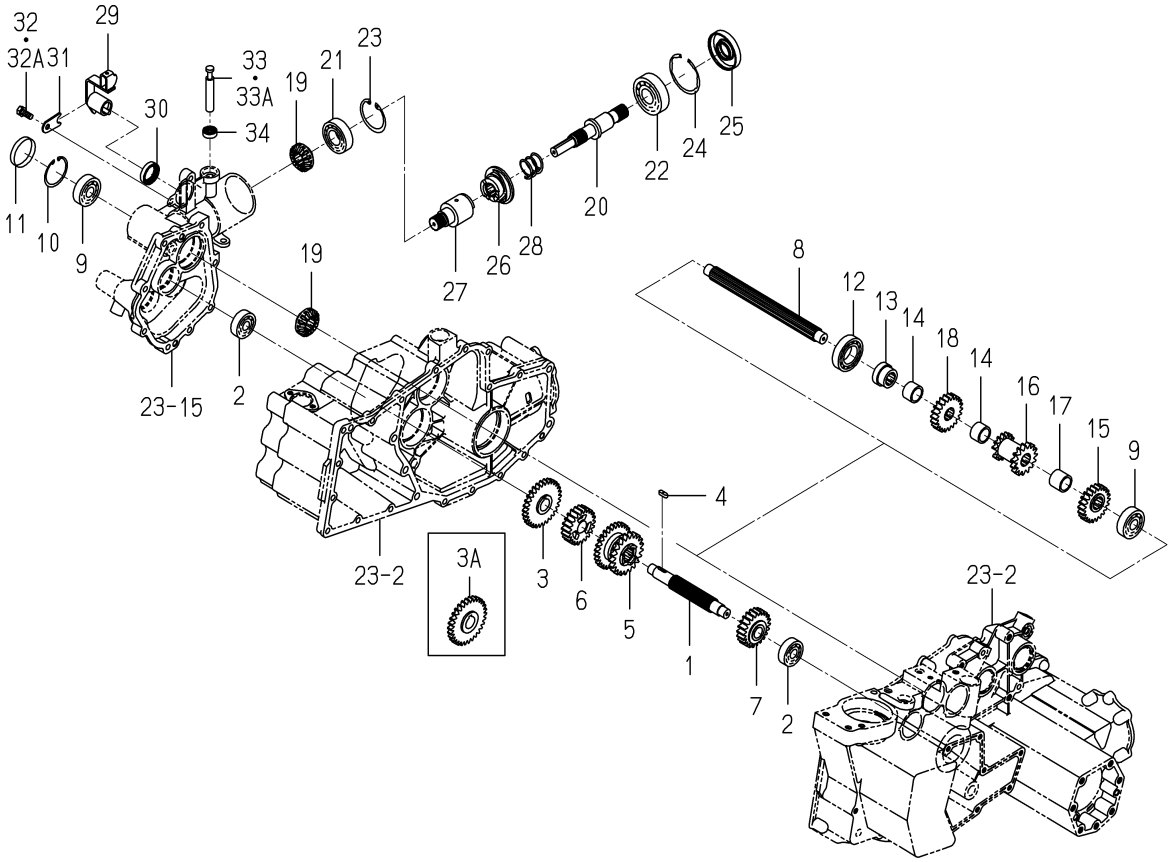

2232-211 -0100

KEY	PART CODE	DESCRIPTION	SPC	TYPE OF MODEL NP60E16		ITC	COL	GRP	REMARKS
30	V744-125-350-70	SEAL,OIL/TC25357	*	1					
31	2232-211-016-00	PLATE/PLANTING CLUTC	*	1					
32	2144-701-021-00	BOLT	*	1 -142					
32A	2144-701-021-10	BOLT/SEAL/M8X16/S	*	1 143-		1			
33	2232-211-025-00	PIN/PLANTING/CLUTCH	*	1 -1133					
33A	2232-211-025-10	PIN/PLANTING/CLUTCH	*	1 1134-		1			
34	V744-112-220-70	SEAL,OIL/TC12227	*	1					

FIG. 36 SHAFT(PLANTING INTERVAL, PLANTING/OUTPUT)SYSTEM(D TYPE)

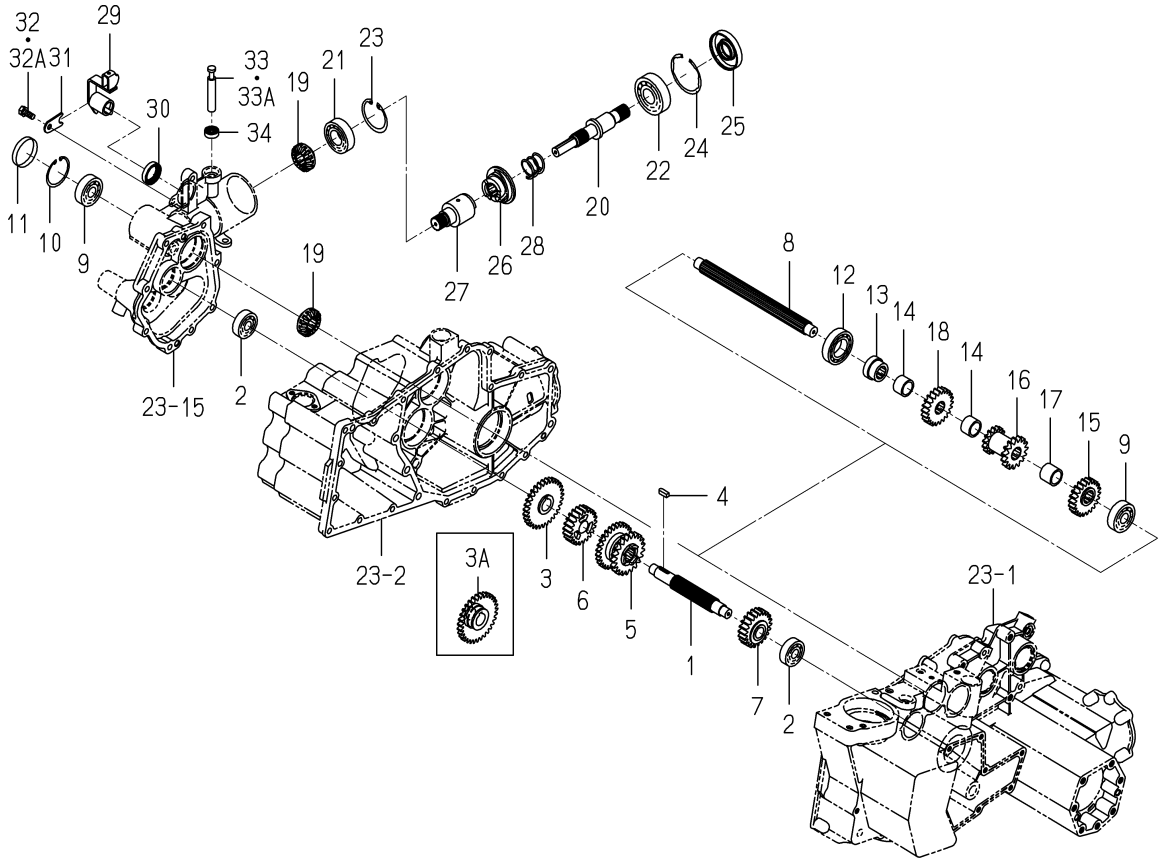

2233-211 -0100

KEY	PART CODE	DESCRIPTION	SPC	TYPE OF MODEL NP60E16		ITC	COL	GRP	REMARKS
1	2232-211-001-20	SHAFT/CHANGE	*	1		3			
2	V600-110-630-20	BEARING,RB/6302	*	2					
3	2233-211-200-10	GEAR/SPUR/31 COMP	*	1 -60		3			
3A	2233-211-200-20	GEAR/SPUR/31 COMP	*	1 61-		1			
4	2232-211-038-00	KEY/06X06X18	*	1					
5	2232-211-003-00	GEAR/SPUR/21-28	*	1					
6	2232-211-004-00	GEAR/SPARSE PLANTING	*	1					
7	2232-211-005-00	GEAR/SPARSE PLANTING	*	1					
8	2232-211-006-20	SHAFT/DRIVEN	*	1					
9	V600-110-630-30	BEARING,RB/6303	*	2					
10	V705-140-047-00	RING,SNAP/47 C	*	1					
11	2194-701-010-00	PLUG/47	*	1					
12	V600-110-600-60	BEARING,RB/6006	*	1					
13	2232-211-035-00	HUB/PLANTING/DRIVEN	*	1					
14	2232-211-033-10	COLOR/21X27X18	*	2					
15	2232-211-018-00	GEAR/SPARSE PLANTING	*	1					
16	2232-211-007-00	GEAR/SPUR/15-15	*	1					
17	2232-211-034-00	COLOR/21X27X23	*	1					
18	2232-211-017-00	GEAR/SPARSE PLANTING	*	1					
19	2232-211-024-00	GEAR/BEVEL/15/NP	*	2					
20	2232-211-015-10	SHAFT/PLANT/OUT	*	1					
21	V600-110-620-50	BEARING,RB/6205	*	1					
22	V600-110-630-50	BEARING,RB/6305	*	1					
23	V705-140-052-00	RING,SNAP/52 C	*	1					
24	V707-140-062-00	RING,SNAP/R62	*	1					
25	8595-201-025-00	SEAL/OIL	*	1					
26	2232-211-013-00	CLUTCH/PLANTING	*	1					
27	2232-211-014-10	CLUCH/PLANTER/DRIVE	*	1					
28	2180-203-002-00	SPRING/HC028	*	1					
29	2232-211-200-10	SHIFTER/CLUTCH/REVER	*	1					

FIG. 36 SHAFT(PLANTING INTERVAL, PLANTING/OUTPUT)SYSTEM(D TYPE)

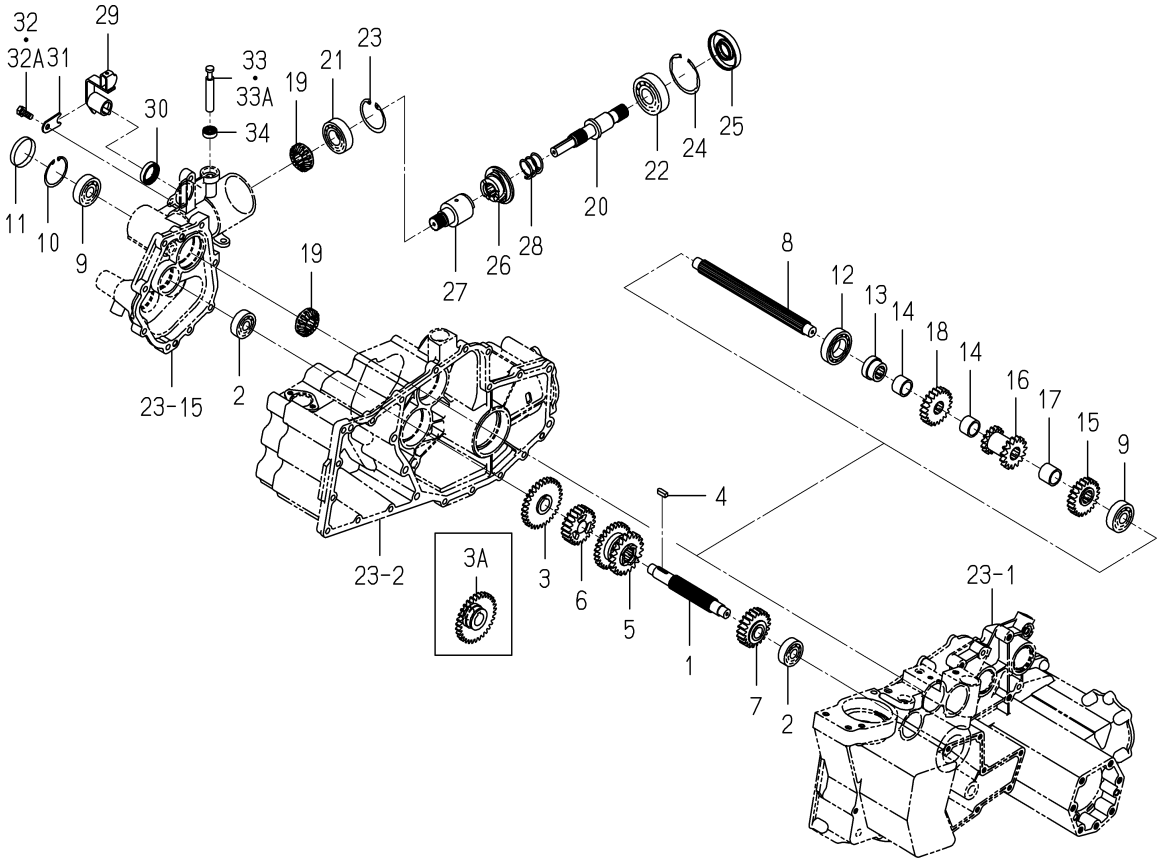

2233-211 -0100

KEY	PART CODE	DESCRIPTION	SPC	TYPE OF MODEL NP60E16		ITC	COL	GRP	REMARKS
30	V744-125-350-70	SEAL,OIL/TC25357	*	1					
31	2232-211-016-00	PLATE/PLANTING CLUTC	*	1					
32	2144-701-021-00	BOLT	*	1 -142					
32A	2144-701-021-10	BOLT/SEAL/M8X16/S	*	1 143-		1			
33	2232-211-025-00	PIN/PLANTING/CLUTCH	*	1 -1133					
33A	2232-211-025-10	PIN/PLANTING/CLUTCH	*	1 1134-		1			
34	V744-112-220-70	SEAL,OIL/TC12227	*	1					

FIG. 37 SHIFT(DRIVE,PLANTING INTERVAL)SYSTEM

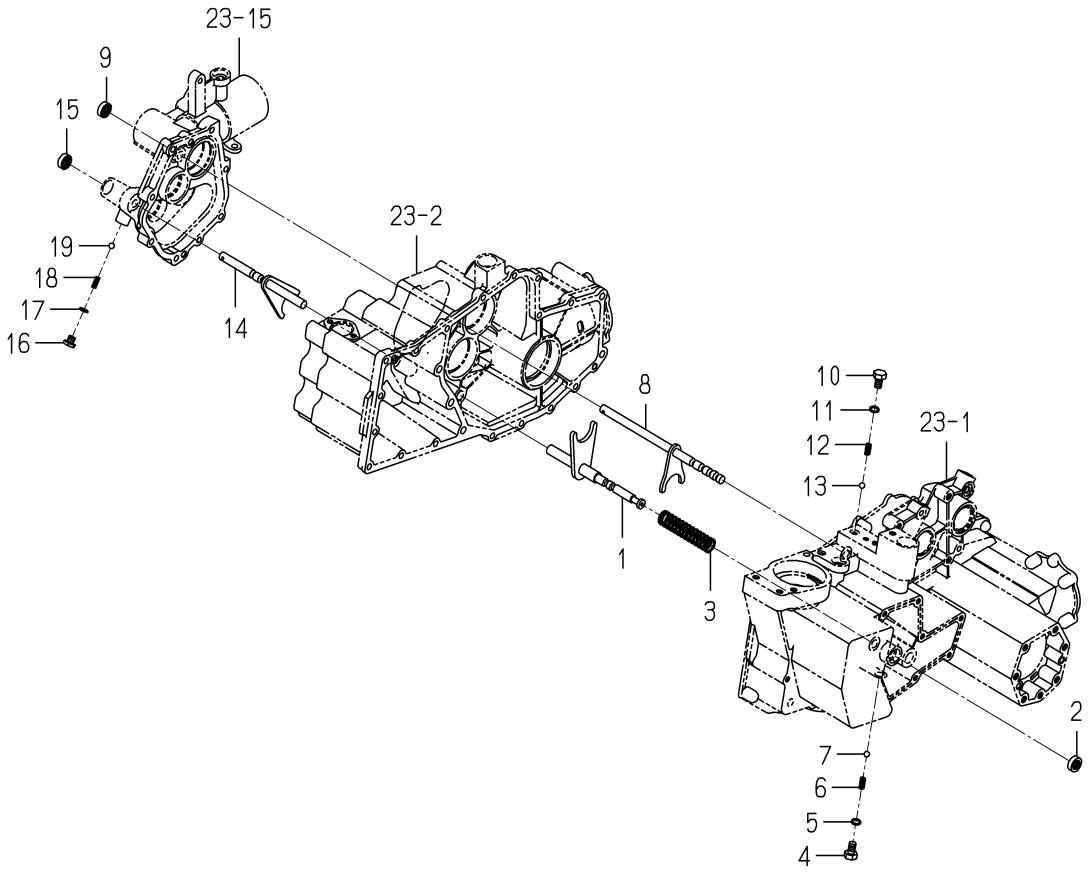

2232-212 -0100

KEY	PART CODE	DESCRIPTION	SPC	TYPE OF MODEL NP60E16		ITC	COL	GRP	REMARKS
1	2232-212-200-10	SHFTER/CHANGE/DRIVE	*	1					
2	V744-112-220-70	SEAL,OIL/TC12227	*	1					
3	2232-212-001-00	SPRING/HC100	*	1					
4	2194-210-001-00	BOLT/10X16/PQ	*	1					
5	V720-101-901-00	O-RING/1A,P10	*	1					
6	2132-210-005-00	SPRING/SHIFTER/P	*	1					
7	V682-200-001-00	BALL,STEEL	*	1					
8	2232-212-210-00	SHIFTER/PLANTING/MEI	*	1					
9	V744-112-220-70	SEAL,OIL/TC12227	*	1					
10	2194-210-001-00	BOLT/10X16/PQ	*	1					
11	V720-101-901-00	O-RING/1A,P10	*	1					
12	2132-210-005-00	SPRING/SHIFTER/P	*	1					
13	V682-200-001-00	BALL,STEEL	*	1					
14	2232-212-220-00	SHIFTER/PLANTING/SUB	*	1					
15	V744-112-220-70	SEAL,OIL/TC12227	*	1					
16	2232-212-003-00	BOLT/SHIFT/PLANTING/	*	1					
17	V720-101-901-00	O-RING/1A,P10	*	1					
18	2132-210-005-00	SPRING/SHIFTER/P	*	1					
19	V682-200-001-00	BALL,STEEL	*	1					

FIG. 38 LEVER(PLANTING INTERVAL)SYSTEM

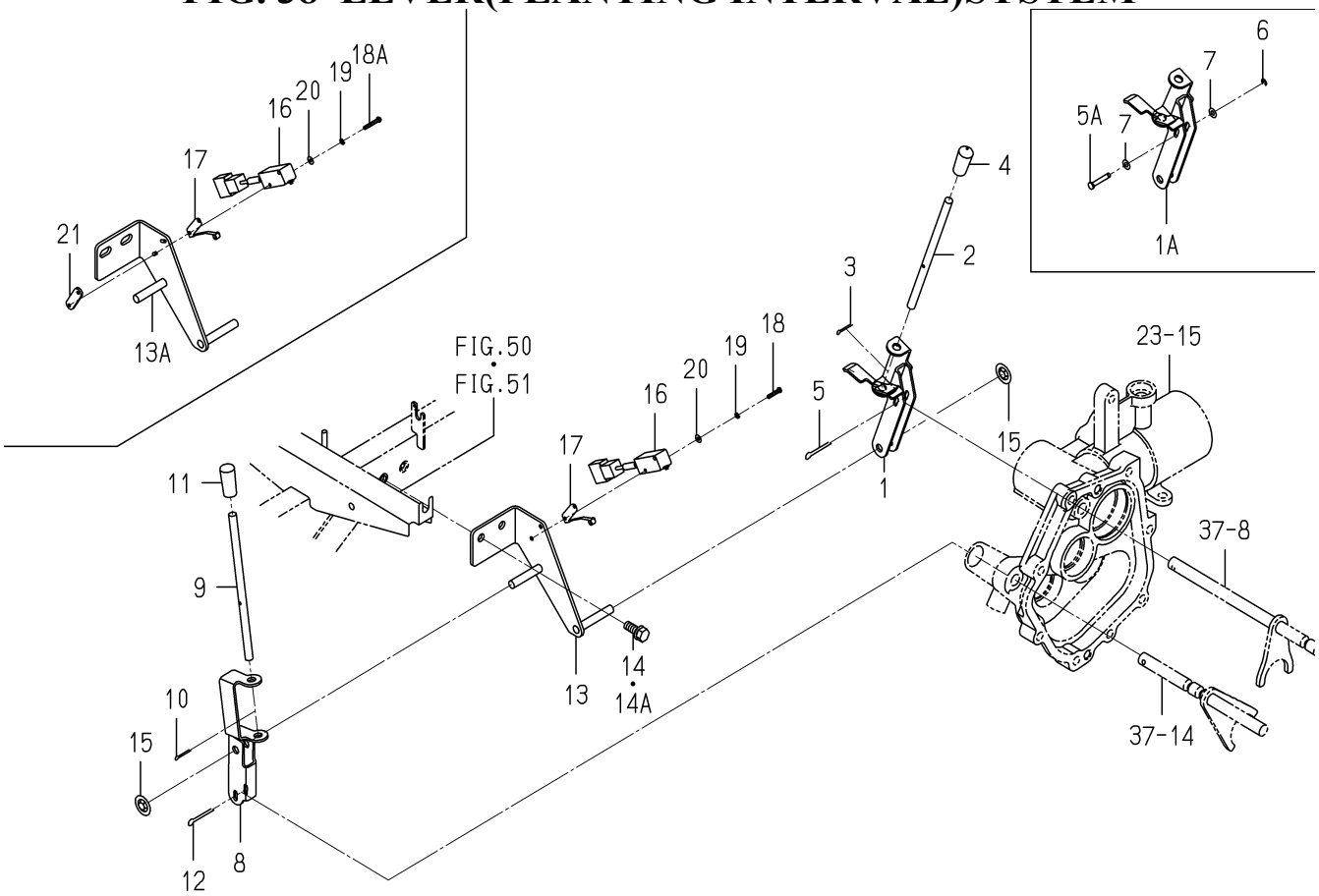

2232-213 -0100

KEY	PART CODE	DESCRIPTION	SPC	TYPE OF MODEL NP60E16		ITC	COL	GRP	REMARKS
1	2232-213-220-30	ARM/PLANTING/A COMP	*	1 -60					
1A	2232-213-220-40	ARM/PLANTING/A COMP	*	1 61-		1			
2	2232-213-002-10	ROD/PLANTING	*	1					
3	V500-162-501-50	PIN,SPLIT/2.5X15	*	1					
4	2204-556-003-00	CAP/GREEN/8	*	1					
5	V500-164-002-50	PIN,SPLIT/4X25	*	1 -60					
5A	2145-770-215-00	PIN/25	*	1 61-					
6	2145-770-214-00	RING, SNAP	*	1 61-					
7	V411-260-004-00	WASHER,PL/M4	*	2 61-					
8	2232-213-200-20	ARM/PLANTING/B COMP	*	1					
9	2232-213-002-10	ROD/PLANTING	*	1					
10	V500-162-501-50	PIN,SPLIT/2.5X15	*	1					
11	3838-620-002-00	GRIP/07X34	*	1					
12	V500-164-002-50	PIN,SPLIT/4X25	*	1					
13	2232-213-210-10	STAY/LEVER COMP	*	1 -60					
13A	2232-213-210-20	STAY/LEVER COMP	*	1 61-		1			
14	V211-260-802-00	BOLT,S/M8X20	*	2 -60					
14A	V211-360-802-00	BOLT,SP/M8X20	*	2 61-					
15	2183-526-008-00	BUSHPUSHNUT/08	*	2					
16	3807-836-350-00	SWITCH ASSY	*	1					
17	3807-836-400-00	ACTUATOR ASSY	*	1					
18	V111-163-001-60	SCREW/M3X16	*	2 -60					
18A	V111-163-002-00	SCREW/M3X20	*	2 61-					
19	V401-160-003-00	WASHER,SP/M3	*	2					
20	V411-260-003-00	WASHER,PL/M3	*	2					
21	2186-124-052-00	PLATE	*	1 61-					

FIG. 39 PEDAL(CLUTCH/DIFFERENTIAL GEAR)SYSTEM

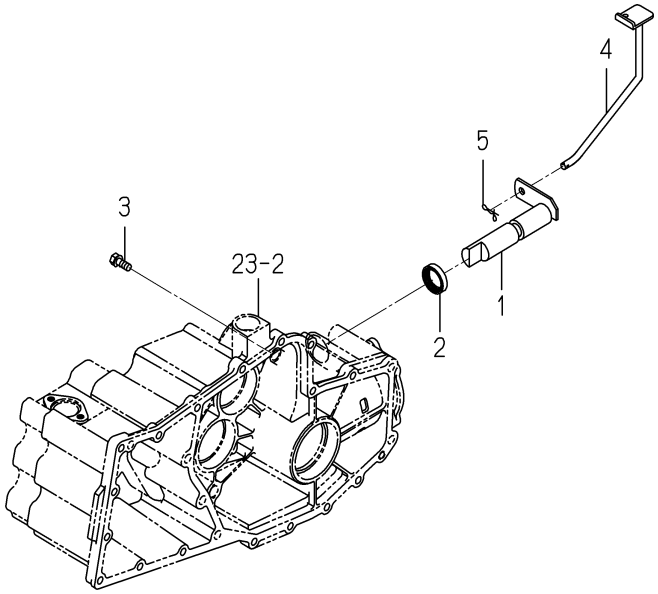

2232-215 -0100

KEY	PART CODE	DESCRIPTION	SPC	TYPE OF MODEL NP60E16		ITC	COL	GRP	REMARKS
1	2232-215-210-00	SHAFT/DIFFLOCK/NP	*	1					
2	V744-125-350-70	SEAL,OIL/TC25357	*	1					
3	2161-214-003-00	BOLT	*	1					
4	2232-215-230-10	PEDAL/DIFFLOCK COMP	*	1					
5	2161-735-006-00	PIN/STOPPER/8	*	1					

FIG. 40 WHEEL(REAR/950)SYSTEM(D TYPE)

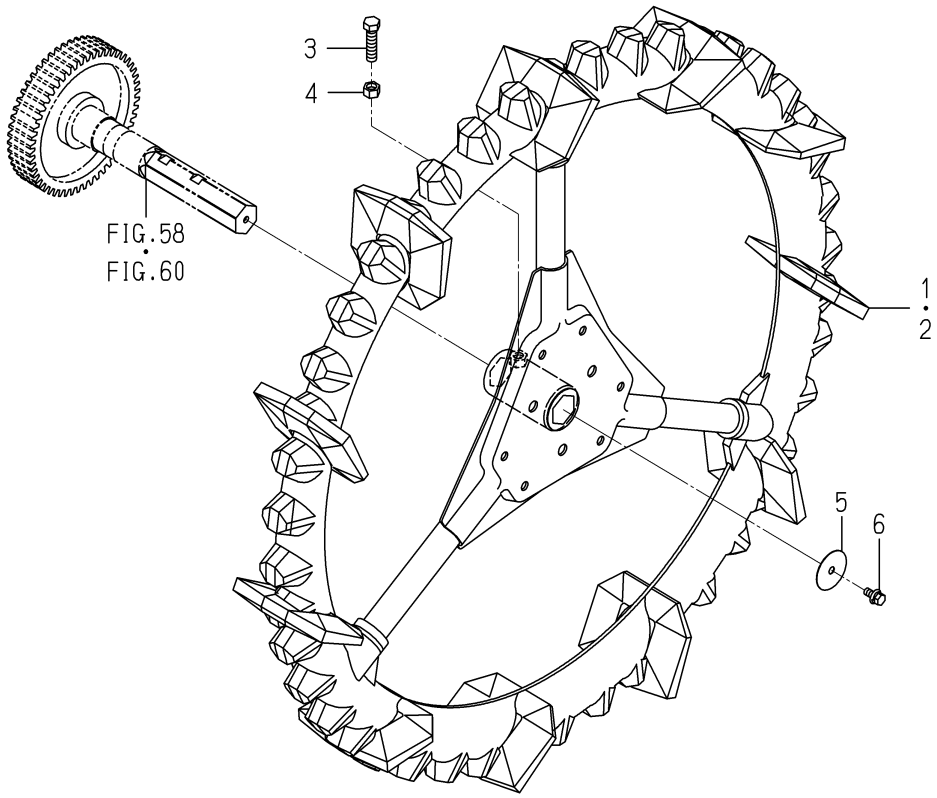

2233-222 -0100

KEY	PART CODE	DESCRIPTION	SPC	TYPE OF MODEL NP60E16		ITC	COL	GRP	REMARKS
1	2233-222-200-20	WHEEL/950/LH COMP	*	1		1			
2	2233-222-210-20	WHEEL/950/RH COMP	*	1		1			
3	2204-222-001-00	BOLT/M12X45	*	2					
4	V304-260-012-00	NUT/M12	*	2					
5	2142-307-002-00	WASHER	*	2					
6	V211-360-802-00	BOLT,SP/M8X20	*	2					

FIG. 41 WHEEL(REAR/900)SYSTEM(G TYPE)

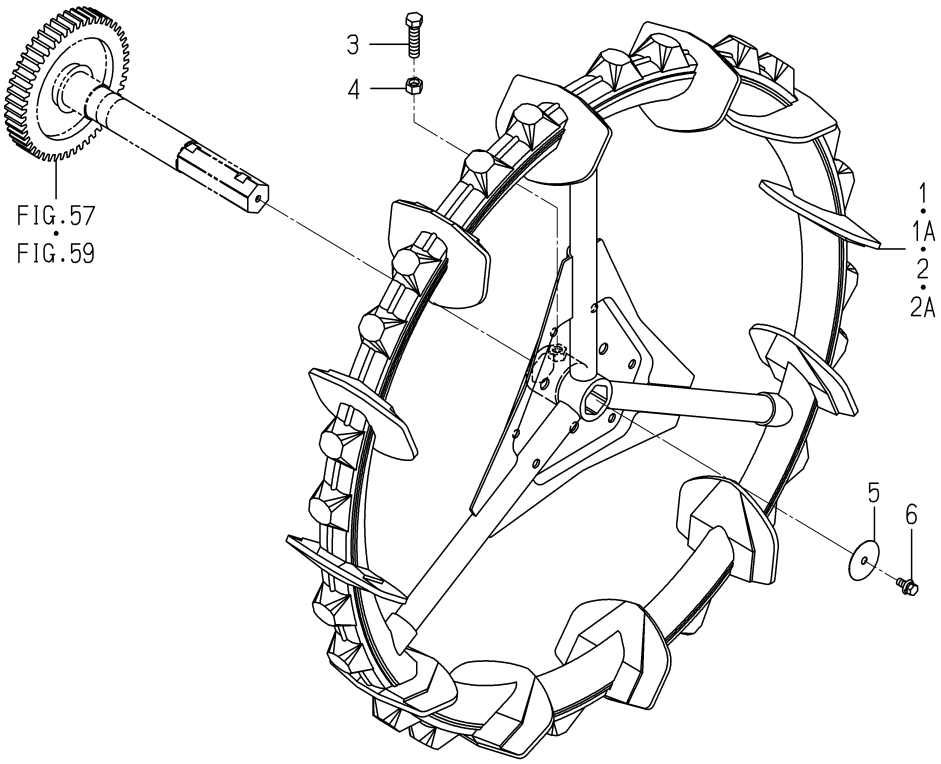

2232-222A-0100

KEY	PART CODE	DESCRIPTION	SPC	TYPE OF MODEL NP60E16		ITC	COL	GRP	REMARKS
1	2232-222-250-00	WHEEL/THICK RIM/900/	*	1 -622					
1A	2232-222-250-10	WHEEL/THICK RIM/900/	*	1 623-		1			
2	2232-222-260-00	WHEEL/THICK RIM/900/	*	1 -622					
2A	2232-222-260-10	WHEEL/THICK RIM/900/	*	1 623-		1			
3	2204-222-001-00	BOLT/M12X45	*	2					
4	V304-260-012-00	NUT/M12	*	2					
5	2142-307-002-00	WASHER	*	2					
6	V211-360-802-00	BOLT,SP/M8X20	*	2					

FIG. 42 SHAFT(STEERING)SYSTEM

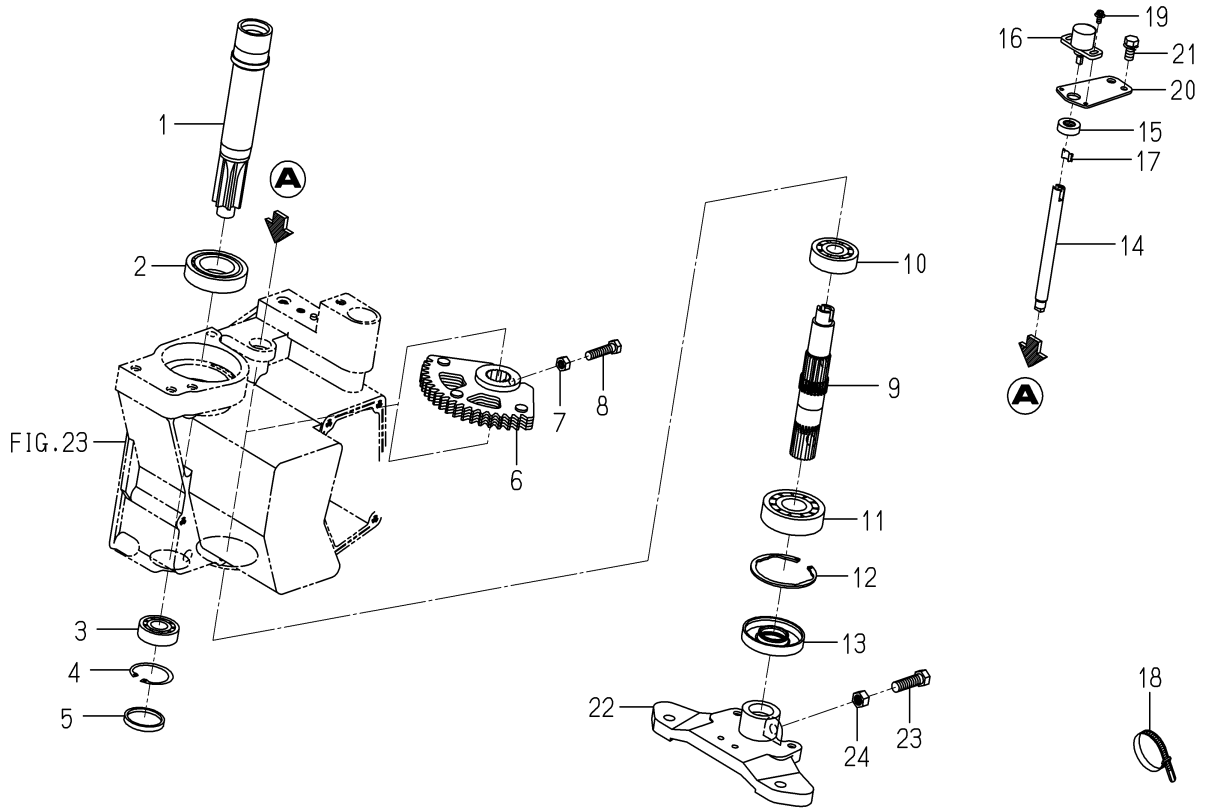

2232-302 -0100

KEY	PART CODE	DESCRIPTION	SPC	TYPE OF MODEL NP60E16		ITC	COL	GRP	REMARKS
1	2232-302-210-00	SHAFT/STEERING/IN	*	1					
2	V600-110-600-70	BEARING,RB/6007	*	1					
3	V600-110-620-30	BEARING,RB/6203	*	1					
4	V705-140-040-00	RING,SNAP/40 C	*	1					
5	1337-708-007-00	COVER,METAL	*	1					
6	2204-302-200-10	GEAR,STERRING ARM	*	1					
7	V304-460-008-00	NUT/M8/7T	*	1					
8	V201-360-803-50	BOLT/M8X35/7T	*	1					
9	2232-302-006-00	SHAFT/STEARING/OUT	*	1					
10	V600-110-630-30	BEARING,RB/6303	*	1					
11	V600-110-630-50	BEARING,RB/6305	*	1					
12	V707-140-062-00	RING,SNAP/R62	*	1					
13	8595-201-025-00	SEAL/OIL	*	1					
14	2232-302-002-10	SHAFT/SENCER/STEERIN	*	1					
15	V744-112-220-70	SEAL,OIL/TC12227	*	1					
16	2232-556-230-00	SENSOR/ANGLE/330	*	1					
17	2232-556-032-00	SPACER/SENSOR/ANGLE	*	1					
18	1376-402-003-00	BAND,WIRE/140	*	1208-1					
19	V120-364-001-00	SCREW,SP/M4X10	*	1214-2					
20	2232-302-003-00	STAY/SENSOR/STEERING	*	1					
21	V211-260-801-60	BOLT,S/M8X16	*	1					
22	2232-302-001-20	ARM/PITMAN/6	*	1					
23	V201-361-003-50	BOLT/M10X35/7T	*	1					
24	V304-460-010-00	NUT/M10/7T	*	1					

FIG. 43 ROD(TIE)SYSTEM

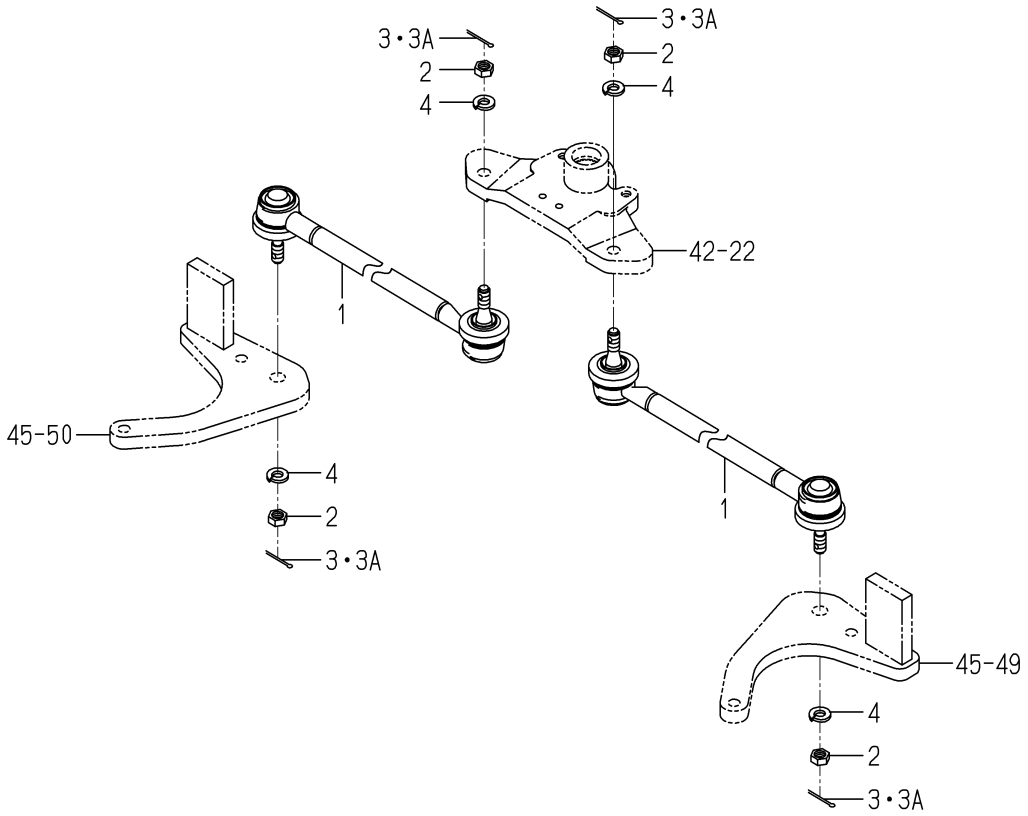

2232-303 -0100

KEY	PART CODE	DESCRIPTION	SPC	TYPE OF MODEL NP60E16		ITC	COL	GRP	REMARKS
1	2232-303-260-10	ROD/TIECOMP	*	2					
2	V335-260-010-00	NUT/M10,P=1.25	*	4					
3	V500-162-502-50	PIN,SPLIT/2.5X25	*	4 -60					
3A	V500-162-002-50	PIN,SPLIT/2X25	*	4 61-					
4	V401-160-010-00	WASHER,SP/M10	*	4					

FIG. 44 TURN SYSTEM

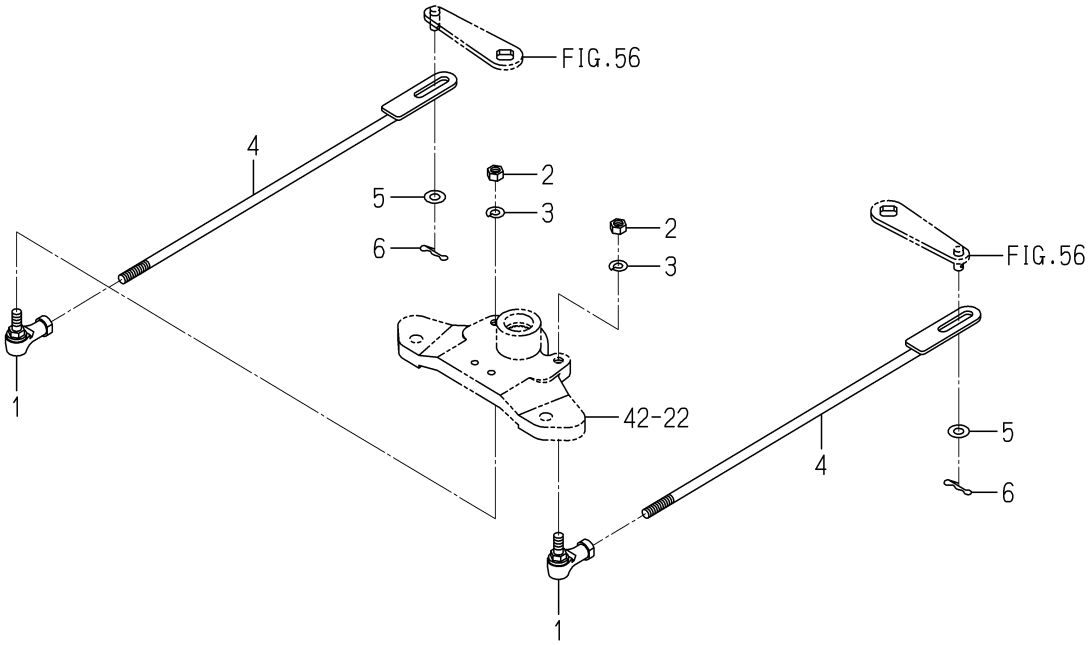

2232-304 -0100

KEY	PART CODE	DESCRIPTION	SPC	TYPE OF MODEL NP60E16		ITC	COL	GRP	REMARKS
1	1560-695-021-00	JOINT BALL M08RH	*	2					
2	V304-260-008-00	NUT/M8	*	2					
3	V401-160-008-00	WASHER,SP/M8	*	2					
4	2232-304-200-30	ROD/CLUTCH COMP	*	2		1			
5	V411-260-008-00	WASHER,PL/M8	*	2					
6	2161-735-006-00	PIN/STOPPER/8	*	2					

FIG. 45 CASE(GEAR/FINAL)SYSTEM(G TYPE)(1/2)

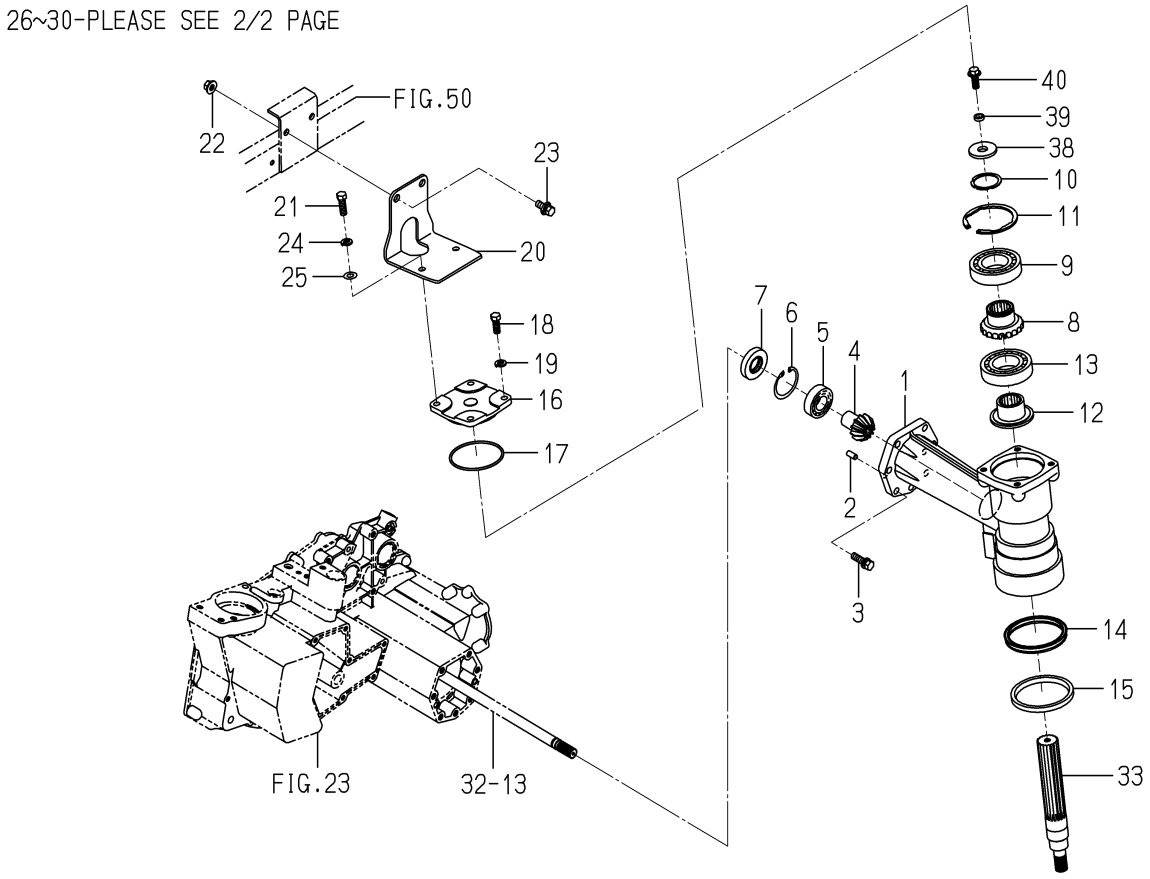

2232-310 -0100

KEY	PART CODE	DESCRIPTION	SPC	TYPE OF MODEL NP60E16		ITC	COL	GRP	REMARKS
1	2232-310-001-30	CASE/FINAL/UPPER	*	2					
2	V522-100-801-80	PIN,ST,A/8X18	*	4					
3	2213-310-004-00	BOLT/M10X35/S	*	14					
4	2232-310-006-00	GEAR/BEVEL/11	*	2					
5	V600-110-620-50	BEARING,RB/6205	*	2					
6	V705-140-052-00	RING,SNAP/52 C	*	2					
7	V744-125-521-00	SEAL,OIL/TC255210	*	2					
8	2232-310-007-00	GEAR/BEVEL/20	*	2					
9	V600-110-620-90	BEARING,RB/6209	*	2					
10	V706-140-045-00	RING,SNAP/S45	*	2					
11	V707-140-085-00	RING,SNAP/R85	*	2					
12	2232-310-005-00	LINER/KINGPIN	*	2					
13	V600-110-620-90	BEARING,RB/6209	*	2					
14	2232-310-018-00	PACKING/90X105X9	*	2					
15	2232-310-019-00	SEAL/DUST/92X104X8	*	2					
16	2232-310-002-10	COVER/FRONT/UPPER	*	2					
17	V721-103-108-50	O-RING/1A,G85	*	2					
18	V201-361-002-50	BOLT/M10X25/7T	*	4					
19	V401-160-010-00	WASHER,SP/M10	*	4					
20	2232-310-301-00	STAY/FRONTAXLE	*	2					
21	V201-361-003-00	BOLT/M10X30/7T	*	4					
22	V363-260-010-00	NUT/WASHER/M10	*	4					
23	V211-361-002-50	BOLT,SP/M10X25	*	4					
24	V401-160-010-00	WASHER,SP/M10	*	4					
25	V411-260-010-00	WASHER,PL/M10	*	4					
26	2232-310-400-00	CASE/FINAL/LOWE COMP	*	2					
27	2232-310-009-00	GEAR/BEVEL/9	*	2					
28	7932-201-002-00	BEARING,RB/6306SH2	*	2					
29	7932-201-002-00	BEARING,RB/6306SH2	*	2					
30	V707-140-072-00	RING,SNAP/R72	*	2					

FIG. 45 CASE(GEAR/FINAL)SYSTEM(G TYPE)(2/2)

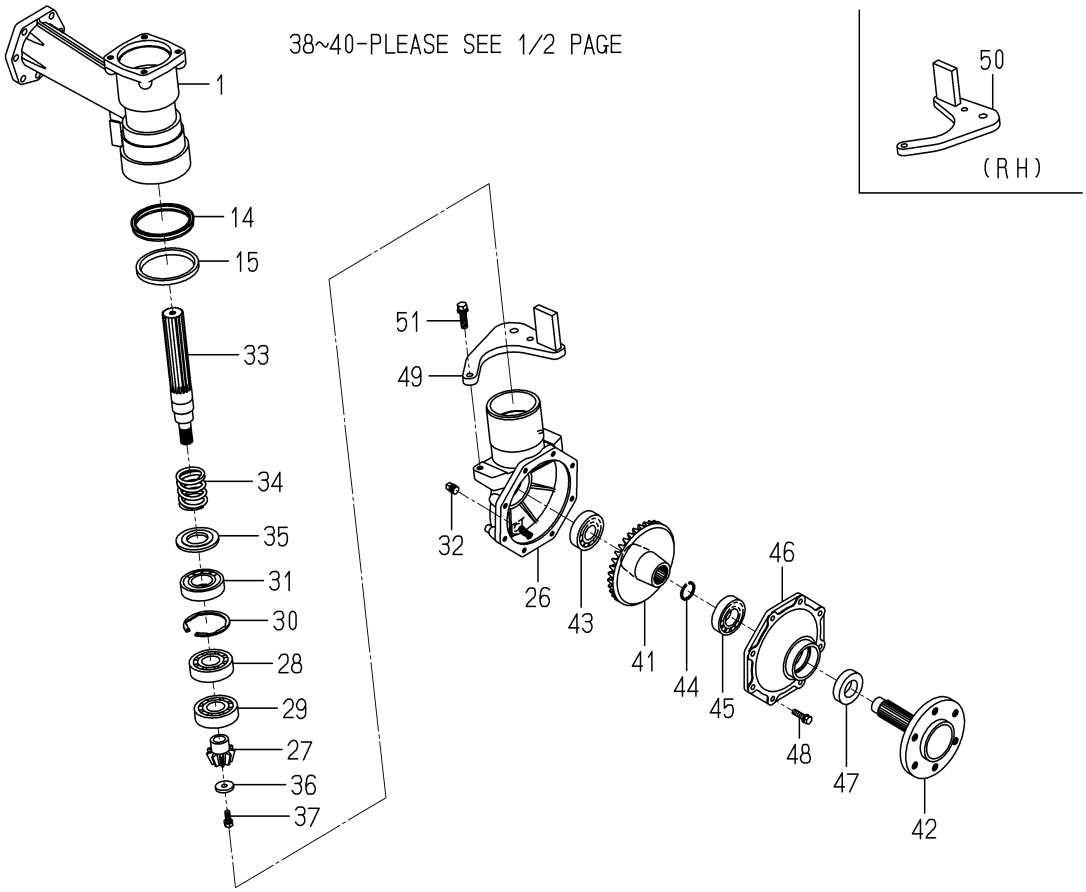

2232-310 -0100

KEY	PART CODE	DESCRIPTION	SPC	TYPE OF MODEL NP60E16		ITC	COL	GRP	REMARKS
31	V600-110-620-70	BEARING,RB/6207	*	2					
32	V781-160-000-4B	PLUG/SCREW/SEAL	*	2					
33	2232-310-008-10	SHAFT/KINGPIN	*	2		1			
34	2232-310-015-00	SPRING/HC053	*	2					
35	2232-310-013-10	COLLAR/SPRING	*	2					
36	2178-503-246-00	WASHER/09X30X4.5	*	2					
37	V211-560-802-00	BOLT,S/M8X20/7T	*	2					
38	2232-310-031-00	WASHER/16X46X5	*	2					
39	2232-310-032-00	COLLAR/11X25X5	*	2					
40	2232-310-033-00	BOLT/FRANGE/M10X25	*	2					
41	2232-310-011-00	GEAR/BEVEL/36	*	2					
42	2232-310-012-10	SHAFT/FRONTWHEEL	*	2					
43	V600-110-630-50	BEARING,RB/6305	*	2					
44	2172-312-002-00	RING,STOP/30	*	2					
45	V600-110-620-60	BEARING,RB/6206	*	2					
46	2232-310-004-00	COVER/FINAL/FRONT	*	2					
47	2186-312-002-00	SEAL,OIL 305514	*	2					
48	V211-560-803-00	BOLT,S/M8X30/7T	*	16					
49	2232-310-200-00	ARM/STOPPER/LH COMP	*	1					
50	2232-310-210-00	ARM/STOPPER/RH COMP	*	1					
51	2213-310-004-00	BOLT/M10X35/S	*	4					

FIG. 46 CASE(GEAR/FINAL)SYSTEM(D TYPE)(1/2)

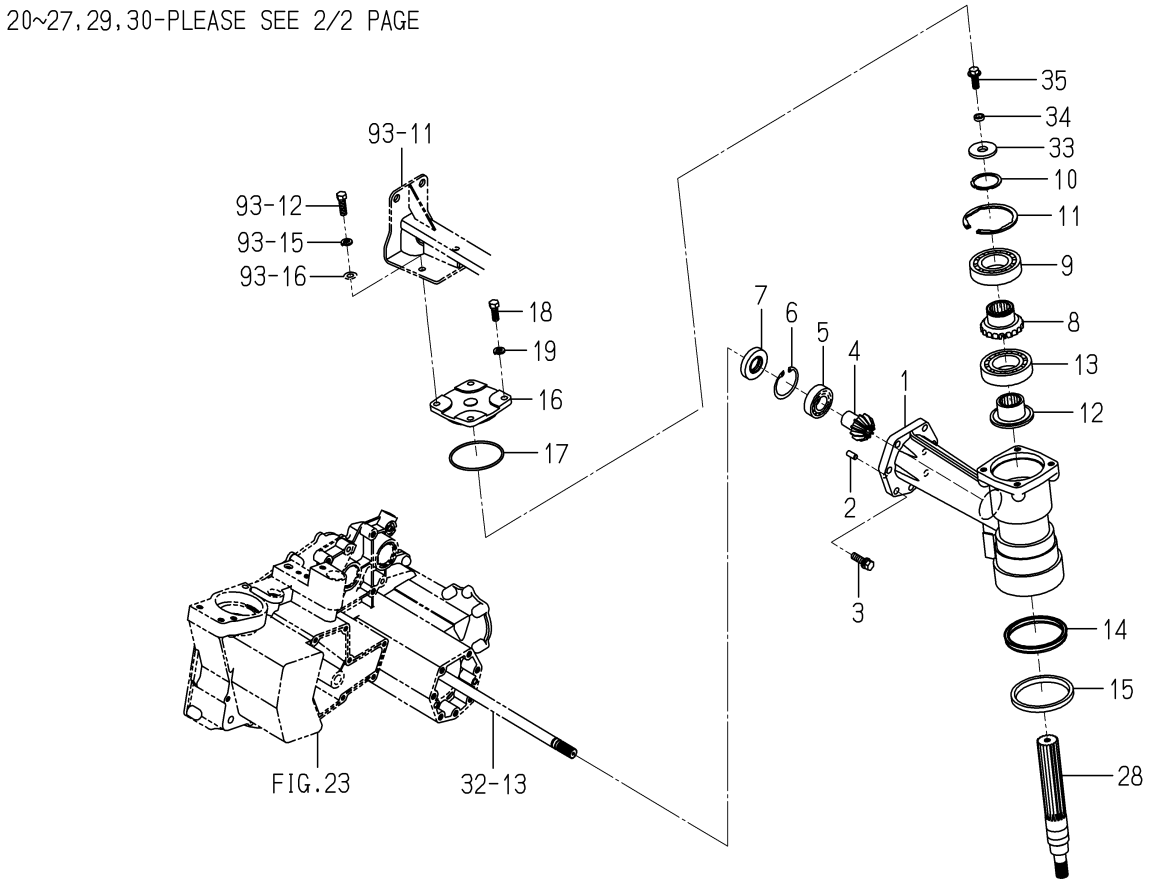

2233-310E-0100

KEY	PART CODE	DESCRIPTION	SPC	TYPE OF MODEL NP60E16		ITC	COL	GRP	REMARKS
1	2232-310-001-30	CASE/FINAL/UPPER	*	2					
2	V522-100-801-80	PIN,ST,A/8X18	*	4					
3	2213-310-004-00	BOLT/M10X35/S	*	14					
4	2232-310-006-00	GEAR/BEVEL/11	*	2					
5	V600-110-620-50	BEARING,RB/6205	*	2					
6	V705-140-052-00	RING,SNAP/52 C	*	2					
7	V744-125-521-00	SEAL,OIL/TC255210	*	2					
8	2232-310-007-00	GEAR/BEVEL/20	*	2					
9	V600-110-620-90	BEARING,RB/6209	*	2					
10	V706-140-045-00	RING,SNAP/S45	*	2					
11	V707-140-085-00	RING,SNAP/R85	*	2					
12	2232-310-005-00	LINER/KINGPIN	*	2					
13	V600-110-620-90	BEARING,RB/6209	*	2					
14	2232-310-018-00	PACKING/90X105X9	*	2					
15	2232-310-019-00	SEAL/DUST/92X104X8	*	2					
16	2232-310-002-10	COVER/FRONT/UPPER	*	2					
17	V721-103-108-50	O-RING/1A,G85	*	2					
18	V201-361-002-50	BOLT/M10X25/7T	*	4					
19	V401-160-010-00	WASHER,SP/M10	*	4					
20	2233-310-400-00	CASE/FINAL/LOWER/D	*	2					
21	2233-310-011-00	GEAR/BEVEL/10	*	2					
22	7932-201-002-00	BEARING,RB/6306SH2	*	2					
23	7932-201-002-00	BEARING,RB/6306SH2	*	2					
24	V707-140-072-00	RING,SNAP/R72	*	2					
25	V600-110-620-70	BEARING,RB/6207	*	2					
26	2233-310-013-00	COLLAR/60X70X08	*	2					
27	V781-160-000-4B	PLUG/SCREW/SEAL	*	2					
28	2233-310-008-00	SHAFT/KINGPIN/8	*	2					
29	2232-310-015-00	SPRING/HC053	*	2					
30	2232-310-013-10	COLLAR/SPRING	*	2					

FIG. 46 CASE(GEAR/FINAL)SYSTEM(D TYPE)(2/2)

33~35-PLEASE SEE 1/2 PAGE

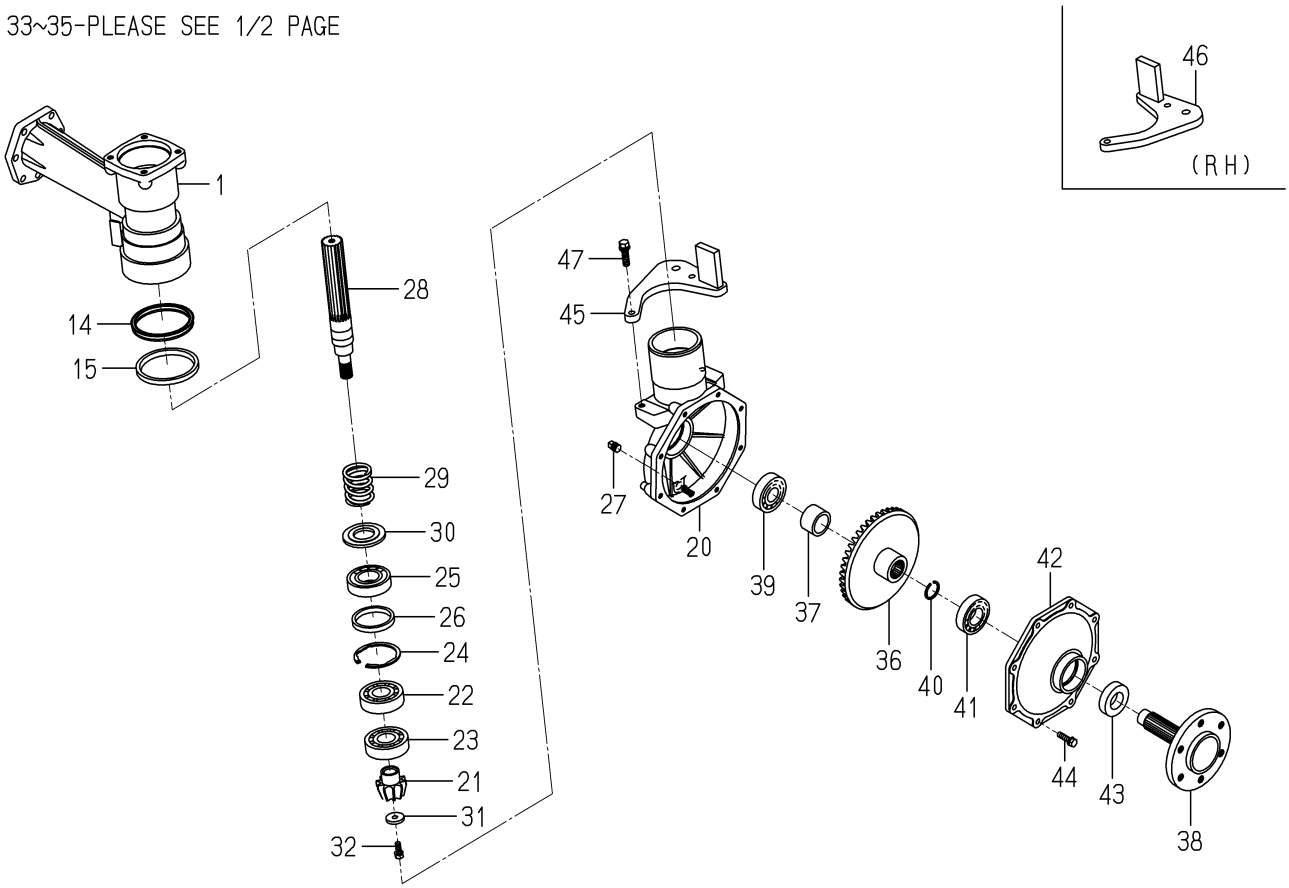

2233-310E-0100

KEY	PART CODE	DESCRIPTION	SPC	TYPE OF MODEL NP60E16		ITC	COL	GRP	REMARKS
31	2178-503-246-00	WASHER/09X30X4.5	*	2					
32	V211-560-802-00	BOLT,S/M8X20/7T	*	2					
33	2232-310-031-00	WASHER/16X46X5	*	2					
34	2232-310-032-00	COLLAR/11X25X5	*	2					
35	2232-310-033-00	BOLT/FRANGE/M10X25	*	2					
36	2233-310-007-00	GEAR/BEVEL/44	*	2					
37	2233-310-014-10	COLLAR/32X43X21	*	2					
38	2232-310-012-10	SHAFT/FRONTWHEEL	*	2					
39	V600-110-630-50	BEARING,RB/6305	*	2					
40	2172-312-002-00	RING,STOP/30	*	2					
41	V600-110-620-60	BEARING,RB/6206	*	2					
42	2233-310-002-00	COVER/FAINAL/FRONT/D	*	2					
43	2186-312-002-00	SEAL,OIL 305514	*	2					
44	V211-560-803-00	BOLT,S/M8X30/7T	*	16					
45	2232-310-200-00	ARM/STOPPER/LH COMP	*	1					
46	2232-310-210-00	ARM/STOPPER/RH COMP	*	1					
47	2213-310-004-00	BOLT/M10X35/S	*	4					

FIG. 47 WHEEL(FRONT/650)SYSTEM(G TYPE)

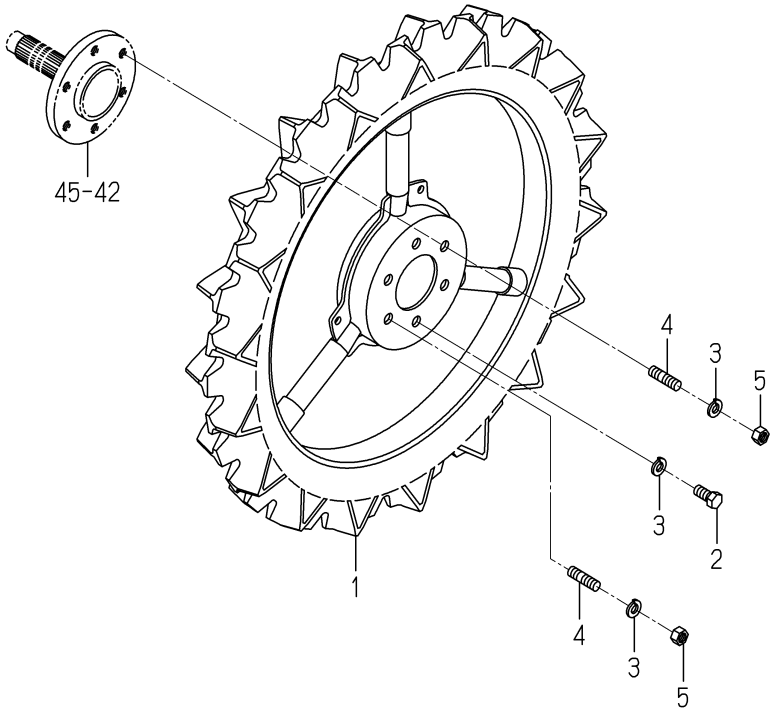

2232-316 -0100

KEY	PART CODE	DESCRIPTION	SPC	TYPE OF MODEL NP60E16		ITC	COL	GRP	REMARKS
1	2232-316-200-00	TIRE/FRONT/650 COMP	*	2					
2	V201-361-202-50	BOLT/M12X25/7T	*	10					
3	V401-160-012-00	WASHER,SP/M12	*	12					
4	V251-341-202-50	STUD/M12X25/7T	*	2					
5	V304-460-012-00	NUT/M12/7T	*	2					

FIG. 48 WHEEL(FRONT/650)SYSTEM(D TYPE)

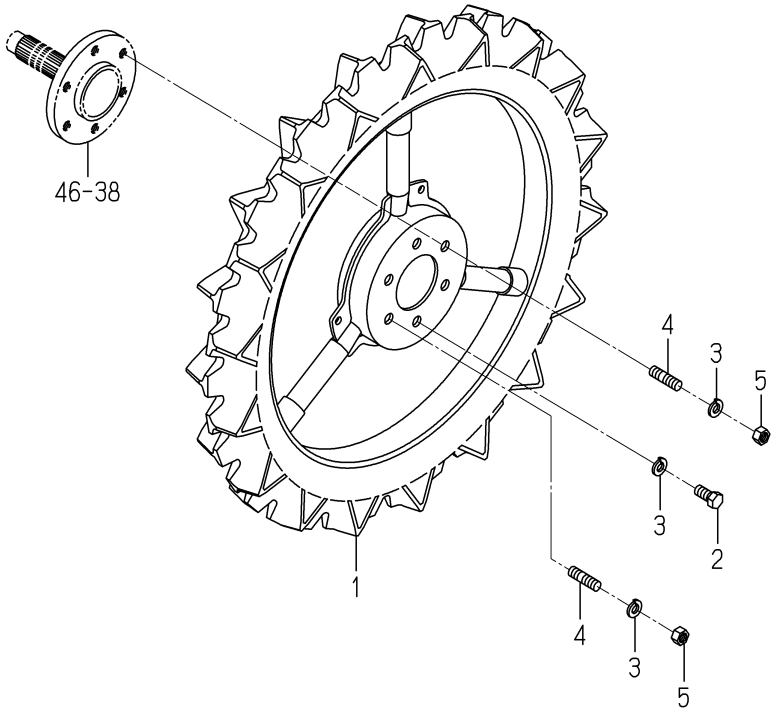

2233-316 -0100

KEY	PART CODE	DESCRIPTION	SPC	TYPE OF MODEL NP60E16		ITC	COL	GRP	REMARKS
1	2233-316-200-10	TIRE/FRONT/650/ COMP	*	2					
2	V201-361-202-50	BOLT/M12X25/7T	*	10					
3	V401-160-012-00	WASHER,SP/M12	*	12					
4	V251-341-202-50	STUD/M12X25/7T	*	2					
5	V304-460-012-00	NUT/M12/7T	*	2					

FIG. 49 CAP(WHEEL/FRONT)SYSTEM

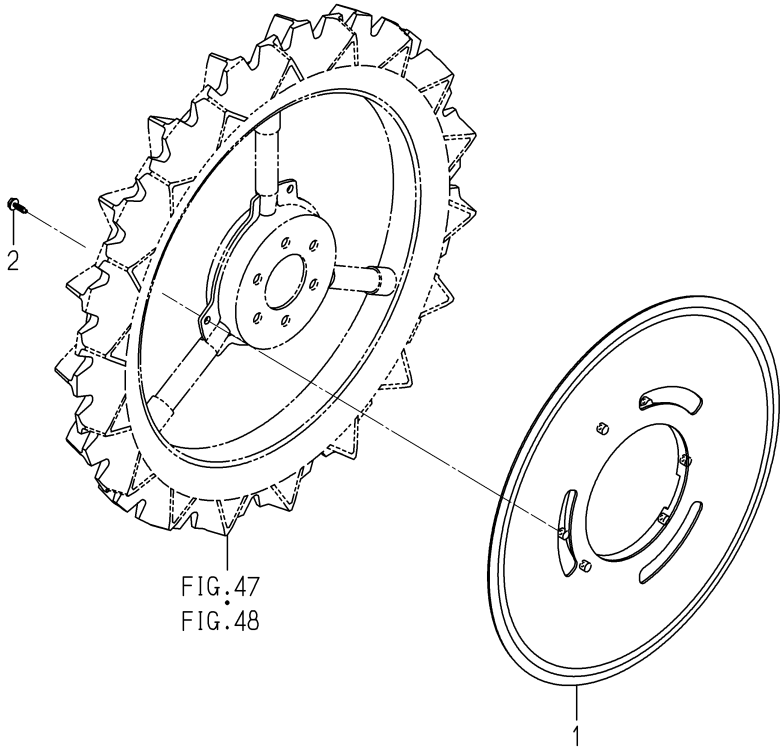

2232-317 -0100

KEY	PART CODE	DESCRIPTION	SPC	TYPE OF MODEL NP60E16		ITC	COL	GRP	REMARKS
1	2232-317-001-10	CAP/FRONTWHEEL/650	*	2					
2	2213-508-004-00	TAPBOLT/6X20	*	6					

FIG. 50 FRAME(MAIN)SYSTEM(D TYPE)

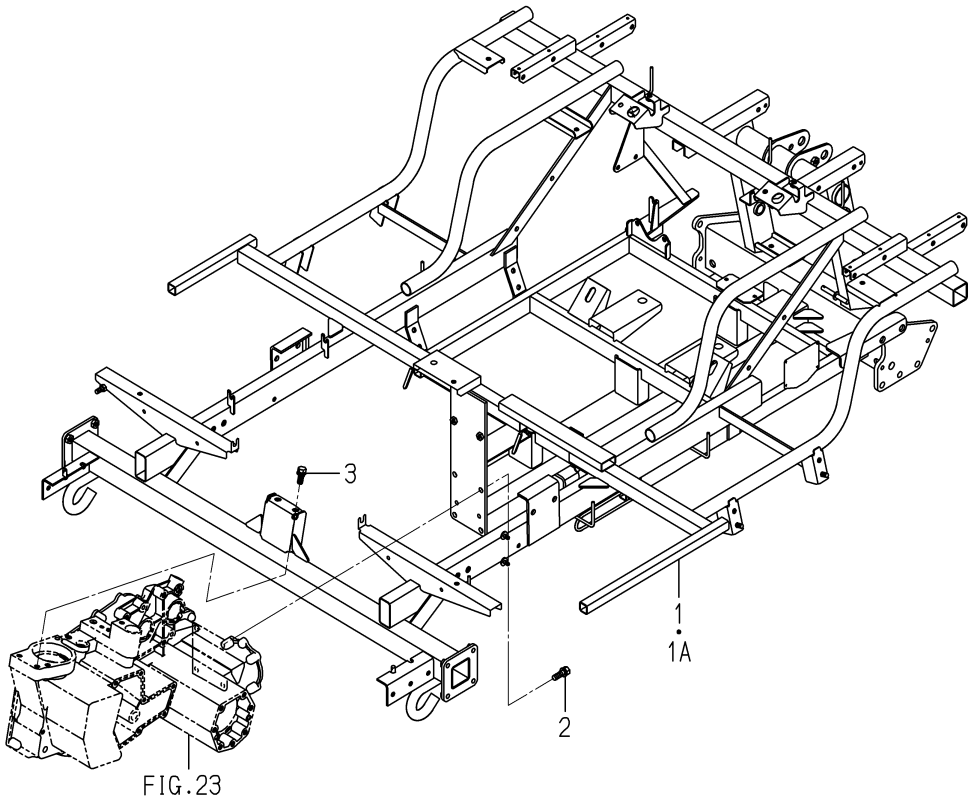

2232-320D-0100

KEY	PART CODE	DESCRIPTION	SPC	TYPE OF MODEL NP60E16		ITC	COL	GRP	REMARKS
1	2232-320-750-00	FRAME/MAIN/D/E1 COMP	*	1 -1133					
1A	2232-320-750-10	FRAME/MAIN/D/E1 COMP	*	1 1134-		1			
2	2204-323-011-00	BOLT/SEAL/M10X30/S	*	4					
3	2204-601-007-10	BOLT/SEAL/M10X25/S	*	2		1			

FIG. 51 FRAME(MAIN)SYSTEM(G TYPE)

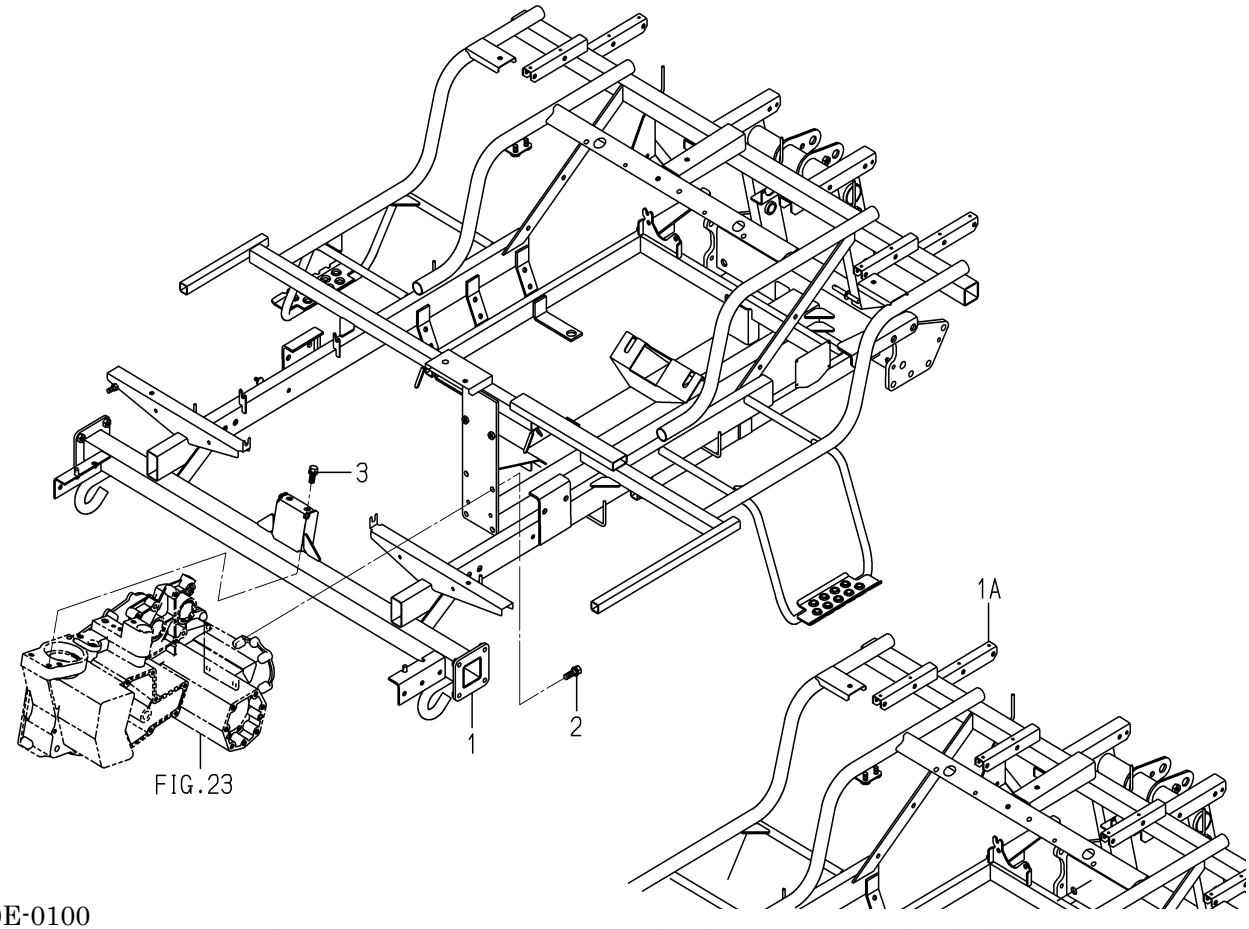

2232-320E-0100

KEY	PART CODE	DESCRIPTION	SPC	TYPE OF MODEL NP60E16		ITC	COL	GRP	REMARKS
1	2232-320-700-00	FRAME/MAIN/G/E1 COMP	*	1 -632					
1A	2232-320-700-10	FRAME/MAIN/G/E1 COMP	*	1 633-		1			
2	2204-323-011-00	BOLT/SEAL/M10X30/S	*	4					
3	2204-601-007-10	BOLT/SEAL/M10X25/S	*	2		1			

FIG. 52 SHAFT(DRIVE/REAR)SYSTEM (G TYPE EXCEPT R)(NO.1-630)

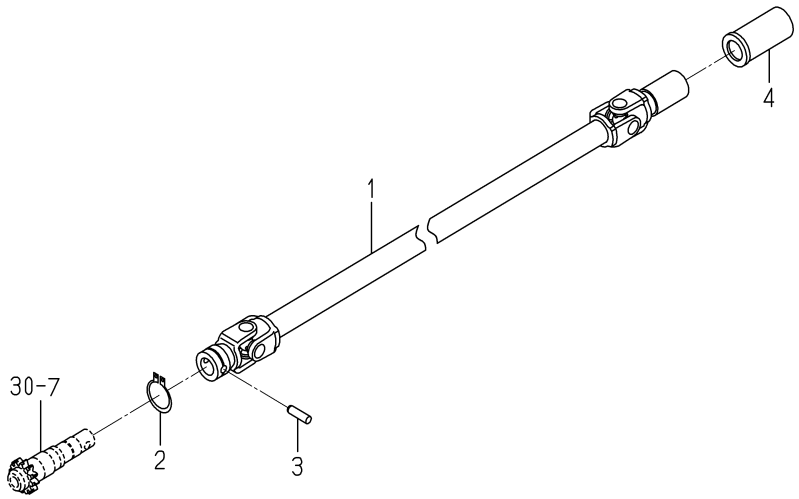

2232-321 -0100

KEY	PART CODE	DESCRIPTION	SPC	TYPE OF MODEL NP60E16		ITC	COL	GRP	REMARKS
1	2232-321-200-20	JOINT/REAR/1200 COMP	*	2 -630					
2	V704-140-032-00	RING,SNAP/32 C	*	2 -630					
3	2161-321-001-00	PIN STRAIGHT	*	2 -630					
4	2194-321-001-00	BOOT,DRIVE SHAFT	*	2 -630					

FIG. 53 SHAFT(DRIVE/REAR)SYSTEM (G TYPE EXCEPT R-NO.631-)

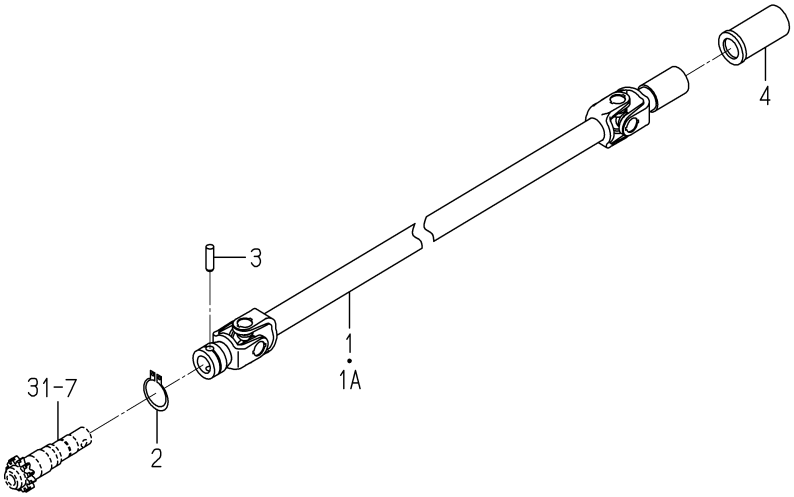

2232-321D-0100

KEY	PART CODE	DESCRIPTION	SPC	TYPE OF MODEL NP60E16		ITC	COL	GRP	REMARKS
1	2232-321-220-00	JOINT/REAR/6D COMP	*	2 -1133					
1A	2232-321-220-10	JOINT/REAR/6D COMP	*	2 1134-		1			
2	V704-140-032-00	RING,SNAP/32 C	*	2					
3	2161-321-001-00	PIN STRAIGHT	*	2					
4	2194-321-001-00	BOOT,DRIVE SHAFT	*	2					

FIG. 54 SHAFT(PLANTING)SYSTEM(D TYPE)

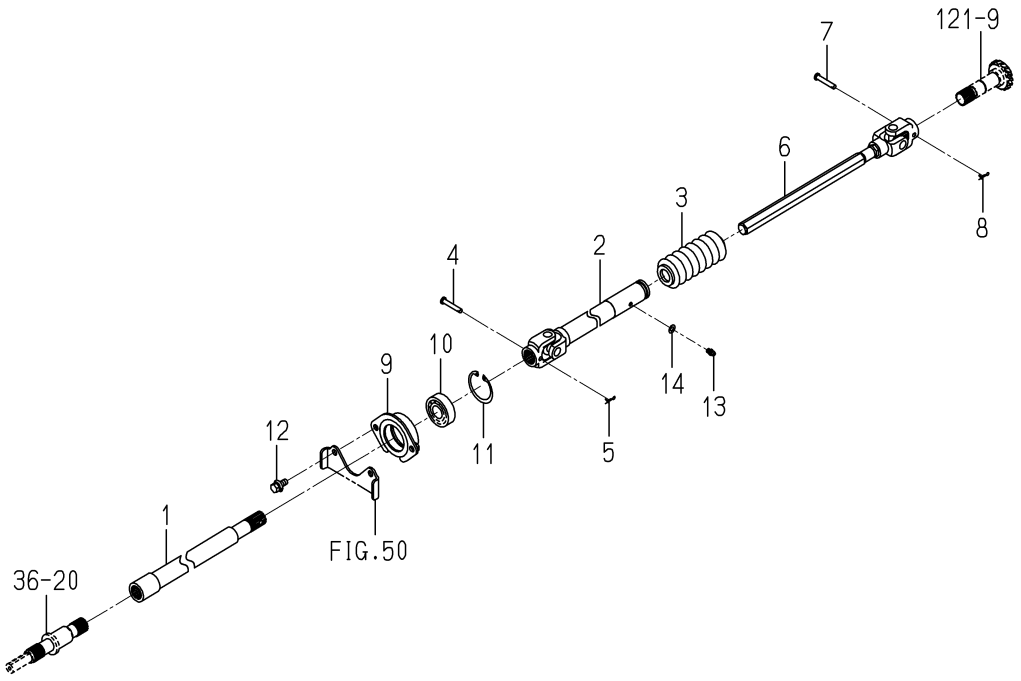

2232-322 -0100

KEY	PART CODE	DESCRIPTION	SPC	TYPE OF MODEL NP60E16		ITC	COL	GRP	REMARKS
1	2232-322-200-10	SHAFT/PLANT/FRONT/12	*	1					
2	2232-322-210-40	SHAFT/JOINT/PLANT	*	1					
3	2145-420-001-20	BOOT/SHAFT	*	1					
4	2232-322-001-00	PIN/06X36	*	1					
5	2161-735-005-00	PIN	*	1					
6	2232-322-220-10	SHAFT/PLANT/REA COMP	*	1					
7	2232-322-001-00	PIN/06X36	*	1					
8	2161-735-005-00	PIN	*	1					
9	2232-322-230-20	HOLDER/SHAFT/PLANT	*	1					
10	V600-150-620-40	BEARING,RB/6204SS	*	1					
11	V705-140-047-00	RING,SNAP/47 C	*	1					
12	V211-360-802-00	BOLT,SP/M8X20	*	2					
13	V760-150-000-00	NIPPLE,GREASE	*	1					
14	V411-260-006-00	WASHER,PL/M6	*	1					

FIG. 55 SHAFT(PLANTING)SYSTEM(G TYPE)

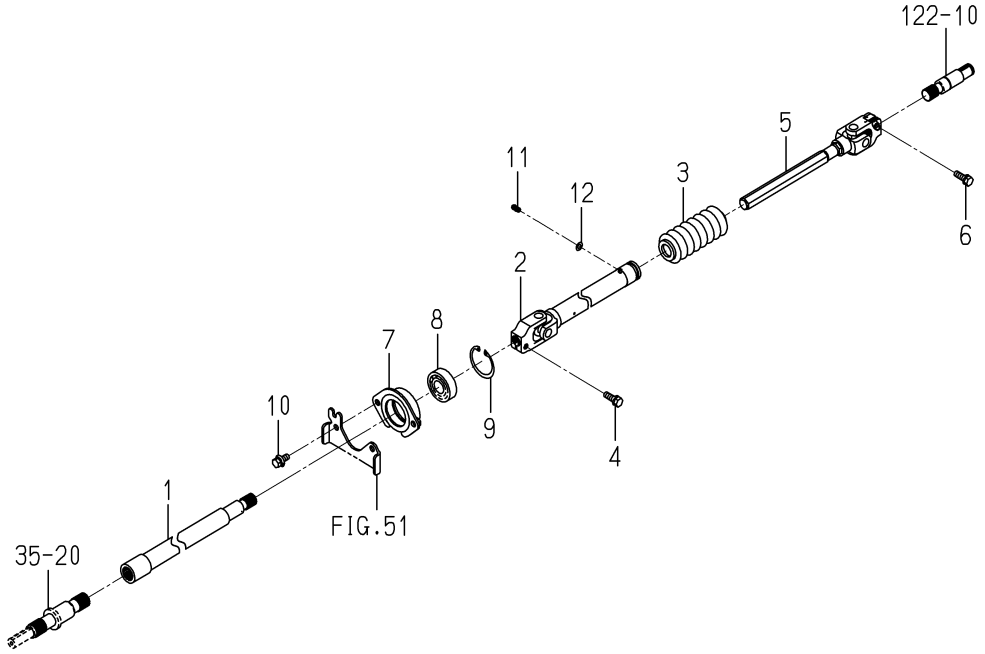

2232-322B-0100

KEY	PART CODE	DESCRIPTION	SPC	TYPE OF MODEL NP60E16		ITC	COL	GRP	REMARKS
1	2232-322-300-00	SHAFT/PLANT/FRONT/12	*	1					
2	2232-322-250-10	SHAFT/PLANT/G COMP	*	1					
3	2145-420-001-20	BOOT/SHAFT	*	1					
4	V211-560-802-50	BOLT,S/M8X25/7T	*	1					
5	2232-322-310-00	SHAFT/PLANT/REAR/G	*	1					
6	V211-560-802-50	BOLT,S/M8X25/7T	*	1					
7	2232-322-230-20	HOLDER/SHAFT/PLANT	*	1					
8	V600-150-620-40	BEARING,RB/6204SS	*	1					
9	V705-140-047-00	RING,SNAP/47 C	*	1					
10	V211-360-802-00	BOLT,SP/M8X20	*	2					
11	V760-150-000-00	NIPPLE,GREASE	*	1					
12	V411-260-006-00	WASHER,PL/M6	*	1					

FIG. 56 SHAFT(BRAKE)SYSTEM

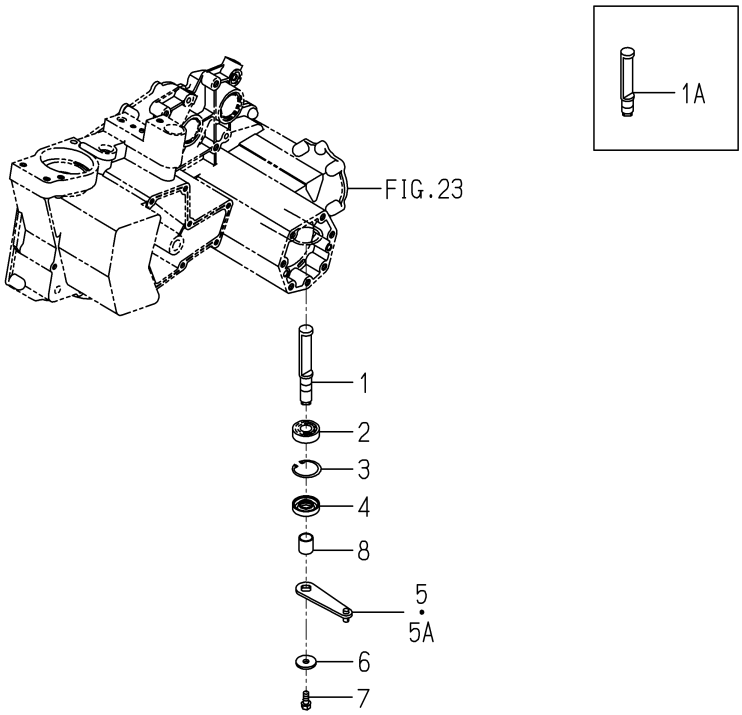

2232-325 -0100

KEY	PART CODE	DESCRIPTION	SPC	TYPE OF MODEL NP60E16		ITC	COL	GRP	REMARKS
1	2232-325-001-00	SIFTER/CLUTCH	*	2 -60					
1A	2232-325-004-00	SIFTER/CLUTCH/G	*	2 61-					
2	V600-110-620-30	BEARING,RB/6203	*	2					
3	V705-140-040-00	RING,SNAP/40 C	*	2					
4	V744-117-400-80	SEAL,OIL/TC17408	*	2					
5	2232-325-200-00	ARM/CLUTCH COMP	*	2 -630					
5A	2232-325-200-10	ARM/CLUTCH COMP	*	2 631-		1			
6	3740-314-017-00	WASHER,TENSION	*	2					
7	2161-214-003-00	BOLT	*	2					
8	2232-325-003-10	TUBE/18X24	*	2					

FIG. 57 CASE(REAR)SYSTEM(GF TYPE)(1/2)

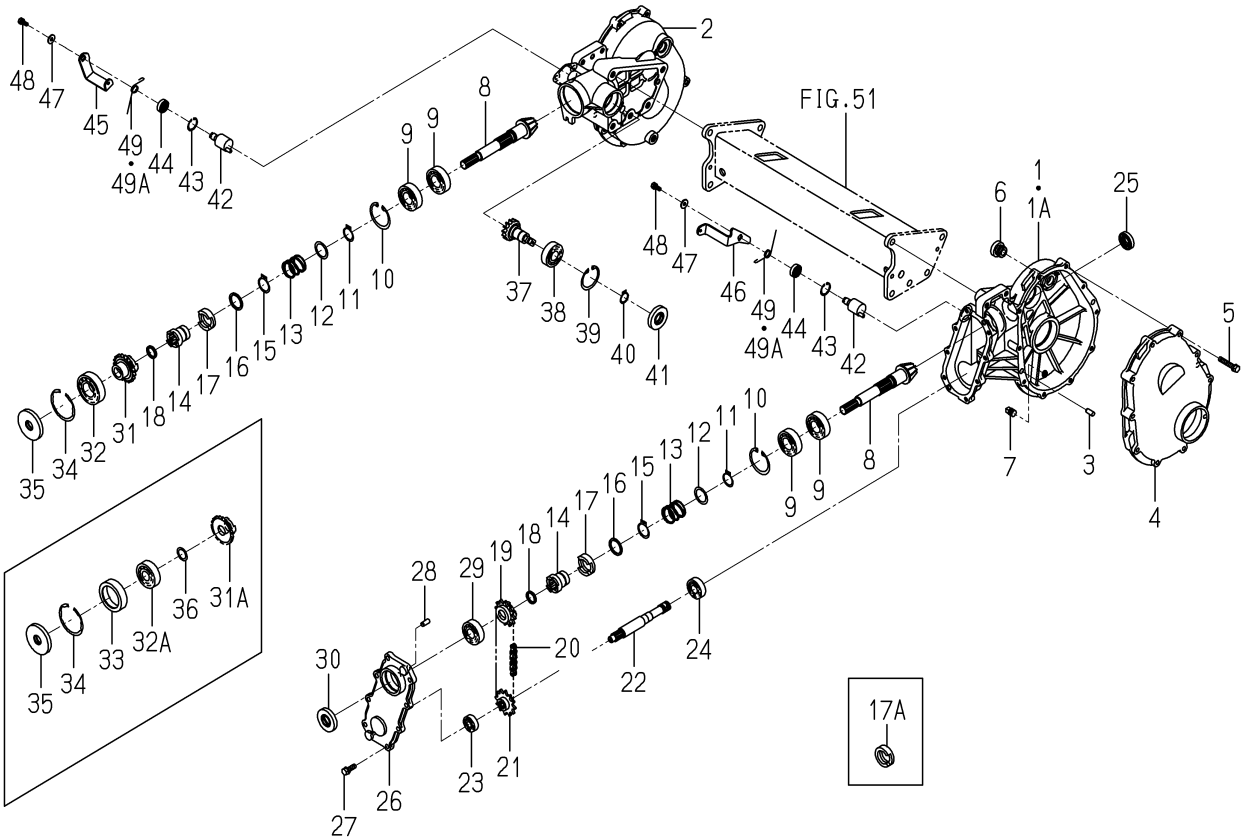

2232-330L-0100

KEY	PART CODE	DESCRIPTION	SPC	TYPE OF MODEL NP60E16		ITC	COL	GRP	REMARKS
1	2232-330-001-20	CASE/REAR/IN/LH	*	1 -1637					
1A	2232-330-001-30	CASE/REAR/IN/LH	*	1 1638-		1			
2	2232-330-002-20	CASE/REAR/IN/RH	*	1					
3	V522-100-801-80	PIN,ST,A/8X18	*	4					
4	2213-330-006-10	CASE/REAR/OUT/8D	*	2					
5	V211-560-804-50	BOLT,S/M8X45/7T	*	20					
6	2157-201-004-10	PLUG,OIL	*	2					
7	V781-160-000-4B	PLUG/SCREW/SEAL	*	2					
8	2232-330-006-00	GEAR/BEVEL/10/FERTIL	*	2					
9	V600-110-620-50	BEARING,RB/6205	*	4					
10	V705-140-052-00	RING,SNAP/52 C	*	2					
11	V704-140-025-00	RING,SNAP/25 C	*	2					
12	2232-330-033-00	WASHER/27X36X1	*	2					
13	2232-330-053-00	SPRING/HC033	*	2					
14	2232-330-013-10	CLUTCH/DRIVE	*	2					
15	V704-140-028-00	RING,SNAP/28 C	*	2					
16	2232-330-042-00	COLLAR/28X35X02	*	2					
17	2232-330-018-30	COLLAR/CLUTCH	*	2 -60					
17A	2232-330-018-50	COLLAR/CLUTCH	*	2 61-		1			
18	2232-330-032-00	COLLAR/20X25X3.2	*	2					
19	2232-330-015-00	SPROCKET/12/DRIVE	*	1					
20	2232-330-023-00	CHAIN/ROLLER/41X034	*	1					
21	2232-330-016-10	SPROCKET/12/DRIVEN	*	1					
22	2232-330-017-00	SHAFT/OUTPUT/ROTOR	*	1					
23	V600-110-620-10	BEARING,RB/6201	*	1					
24	V600-110-620-30	BEARING,RB/6203	*	1					
25	V744-117-350-70	SEAL,OIL/TC17357	*	1					
26	2232-330-004-00	COVER/REAR/INPUT	*	1					
27	V211-260-802-50	BOLT,S/M8X25	*	8					
28	V522-100-801-80	PIN,ST,A/8X18	*	2					

FIG. 57 CASE(REAR)SYSTEM(GF TYPE)(2/2)

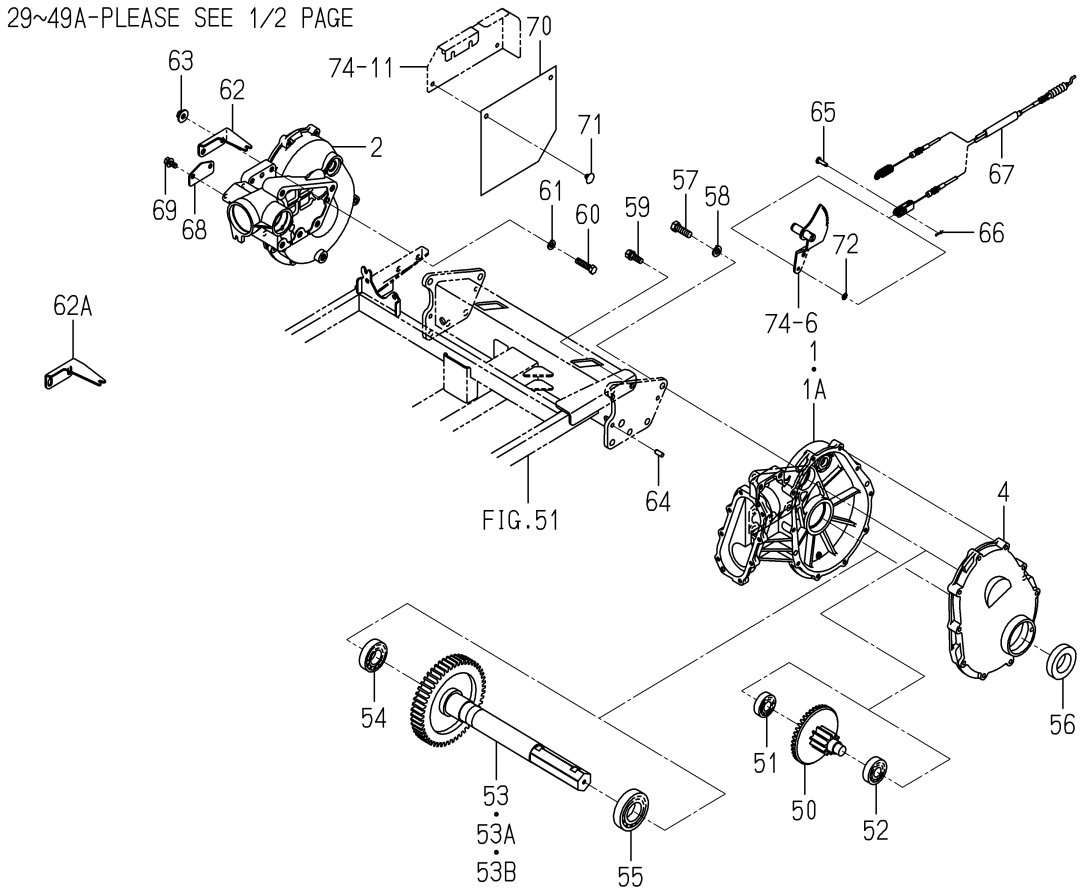

2232-330L-0100

KEY	PART CODE	DESCRIPTION	SPC	TYPE OF MODEL NP60E16		ITC	COL	GRP	REMARKS
29	V600-110-620-40	BEARING,RB/6204	*	1					
30	2161-330-004-00	SEAL,OIL/SDD7/204	*	1					
31	2232-330-012-00	CLUTCH/DRIVEN/FERTIL	*	1 -1105					
31A	2233-330-053-00	CLUTCH/DRIVEN/FERTIL	*	1 1106-					
32	V600-110-620-60	BEARING,RB/6206	*	1 -1105					
32A	V600-110-630-40	BEARING,RB/6304	*	1 1106-					
33	2232-330-054-00	METAL/52X62X16	*	1 1106-					
34	V707-140-062-00	RING,SNAP/R62	*	1					
35	2232-330-022-00	SEAL/OIL	*	1					
36	2194-419-009-00	WASHER/20X28X01	*	1 1106-					
37	2232-330-039-00	SHAFT/FERTILIZE	*	1					
38	V600-110-620-40	BEARING,RB/6204	*	1					
39	V705-140-047-00	RING,SNAP/47 C	*	1					
40	V704-140-020-00	RING,SNAP/20 C	*	1					
41	2161-330-004-00	SEAL,OIL/SDD7/204	*	1					
42	2232-330-220-00	SHIFTER/FERTILIZER	*	2					
43	V705-140-025-00	RING,SNAP/25 C	*	2					
44	V744-112-250-70	SEAL,OIL/TC12257	*	2					
45	2232-330-041-10	ARM/CLUCH/FERTILIZE	*	1					
46	2233-330-051-00	ARM/CLUCH/ROTOR	*	1					
47	3560-503-302-00	WASHER,WIRE TENSION	*	2					
48	V210-260-601-60	BOLT,S/M6X16	*	2					
49	2232-330-043-00	SPRING/HT015	*	2 -60					
49A	2232-330-043-10	SPRING/HT015	*	2 61-		1			
50	2232-330-250-00	SHAFT/COUNTER/41-10	*	2					
51	V600-110-620-40	BEARING,RB/6204	*	2					
52	V600-110-630-40	BEARING,RB/6304	*	2					
53	2232-330-260-10	SHAFT/REAR/WHEEL/6	*	2 -60					
53A	2232-330-260-20	SHAFT/REAR/WHEEL/6	*	2 -630		1			
53B	2232-330-260-30	SHAFT/REAR/WHEEL/6	*	2 631-		1			

FIG. 57 CASE(REAR)SYSTEM(GF TYPE)(2/2)

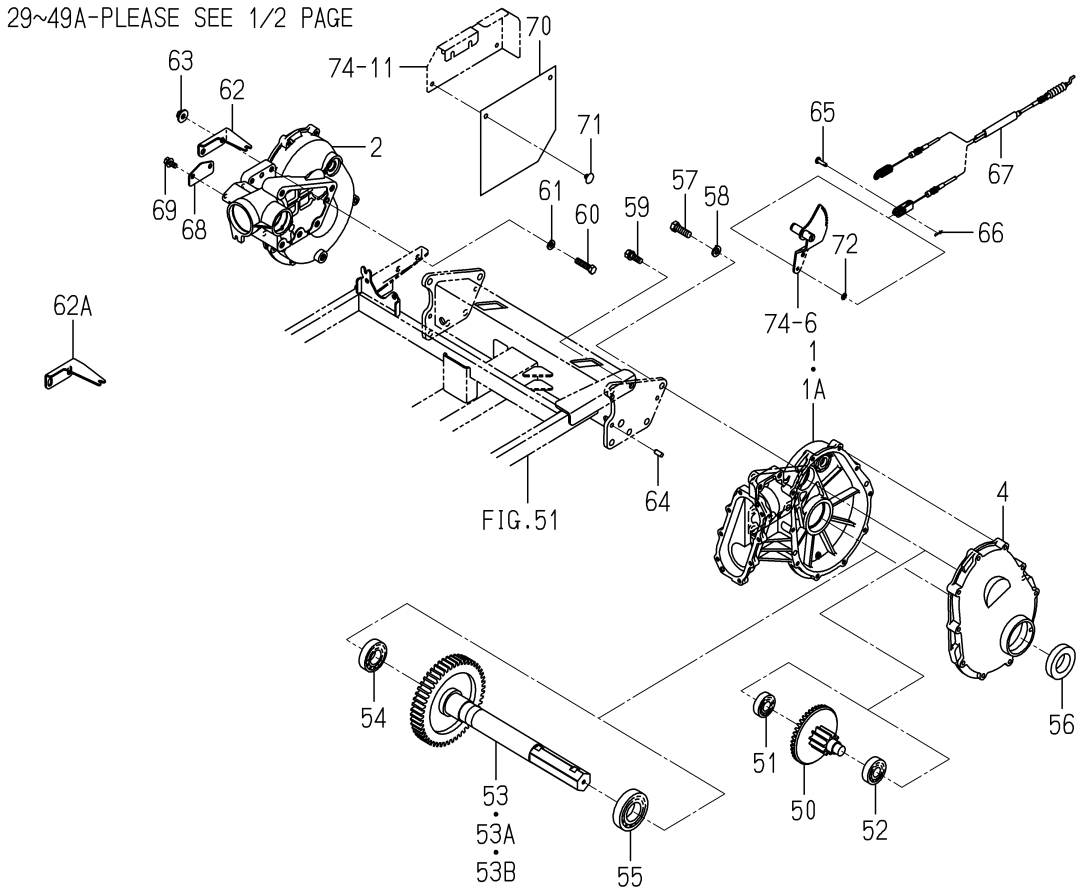

2232-330L-0100

KEY	PART CODE	DESCRIPTION	SPC	TYPE OF MODEL NP60E16		ITC	COL	GRP	REMARKS
54	V600-110-620-60	BEARING,RB/6206	*	2					
55	V600-110-620-80	BEARING,RB/6208	*	2					
56	2162-330-007-00	SEAL,WHEEL SHAFT	*	2					
57	2232-330-045-00	BOLT/SEAL/M12X35	*	10					
58	V402-160-012-00	WASHER,SP/M12	*	10					
59	2204-323-011-00	BOLT/SEAL/M10X30/S	*	2					
60	V201-361-004-0B	BOLT/M10X40/7T,SEAL	*	2					
61	V401-160-010-00	WASHER,SP/M10	*	2					
62	2233-581-001-00	PLATE/CABLE/HOLDER	*	1 -176					
62A	2233-581-001-20	PLATE/CABLE/HOLDER	*	1 177-		1			
63	V363-260-010-00	NUT/WASHER/M10	*	2					
64	V522-100-801-80	PIN,ST,A/8X18	*	4					
65	2111-441-019-20	PIN/2	*	1					
66	2161-735-005-00	PIN	*	1					
67	2232-330-048-00	CABLE/CLUTCH/FERTILI	*	1					
68	2232-330-052-00	COVER/CLUTCH/FERTILI	*	1 61-					
69	V211-360-802-00	BOLT,SP/M8X20	*	2					
70	2232-422-025-00	COVER/FERTIRIZE CLUT	*	1					
71	2186-508-017-00	CLIP,MAT/SUNSET GRAY	*	2					
72	V411-260-006-00	WASHER,PL/M6	*	1					

FIG. 58 CASE(REAR)SYSTEM(DF TYPE)(1/2)

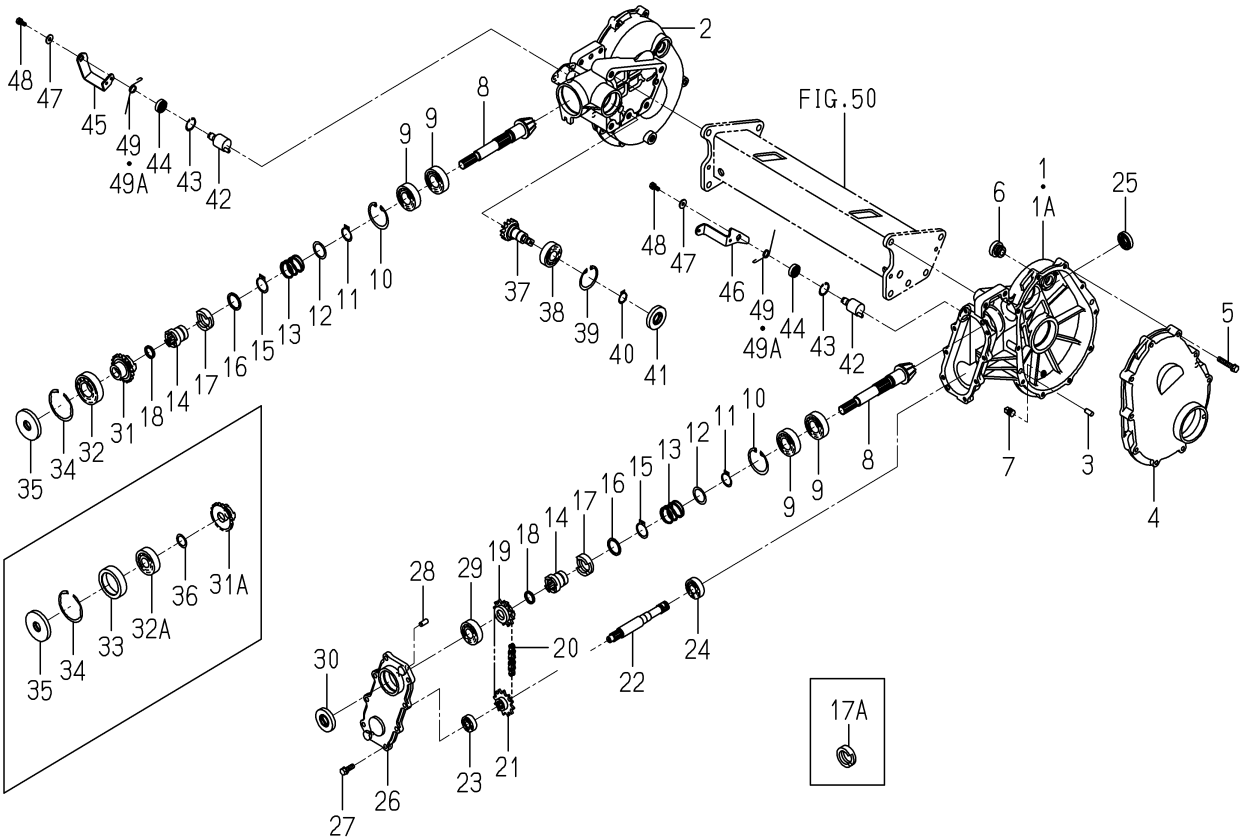

2232-330M-0100

KEY	PART CODE	DESCRIPTION	SPC	TYPE OF MODEL NP60E16		ITC	COL	GRP	REMARKS
1	2232-330-001-20	CASE/REAR/IN/LH	*	1 -1637					
1A	2232-330-001-30	CASE/REAR/IN/LH	*	1 1638-		1			
2	2232-330-002-20	CASE/REAR/IN/RH	*	1					
3	V522-100-801-80	PIN,ST,A/8X18	*	4					
4	2213-330-006-10	CASE/REAR/OUT/8D	*	2					
5	V211-560-804-50	BOLT,S/M8X45/7T	*	20					
6	2157-201-004-10	PLUG,OIL	*	2					
7	V781-160-000-4B	PLUG/SCREW/SEAL	*	2					
8	2233-330-005-10	GEAR/BEVEL/10/FERTIL	*	2					
9	1594-221-001-00	BEARING/BALL 6205SH2	*	4					
10	V705-140-052-00	RING,SNAP/52 C	*	2					
11	V704-140-025-00	RING,SNAP/25 C	*	2					
12	2232-330-033-00	WASHER/27X36X1	*	2					
13	2232-330-053-00	SPRING/HC033	*	2					
14	2232-330-013-10	CLUTCH/DRIVE	*	2					
15	V704-140-028-00	RING,SNAP/28 C	*	2					
16	2232-330-042-00	COLLAR/28X35X02	*	2					
17	2232-330-018-30	COLLAR/CLUTCH	*	2 -60					
17A	2232-330-018-50	COLLAR/CLUTCH	*	2 61-		1			
18	2232-330-032-00	COLLAR/20X25X3.2	*	2					
19	2232-330-015-00	SPROCKET/12/DRIVE	*	1					
20	2232-330-023-00	CHAIN/ROLLER/41X034	*	1					
21	2232-330-016-10	SPROCKET/12/DRIVEN	*	1					
22	2232-330-017-00	SHAFT/OUTPUT/ROTOR	*	1					
23	V600-110-620-10	BEARING,RB/6201	*	1					
24	V600-110-620-30	BEARING,RB/6203	*	1					
25	V744-117-350-70	SEAL,OIL/TC17357	*	1					
26	2232-330-004-00	COVER/REAR/INPUT	*	1					
27	V211-260-802-50	BOLT,S/M8X25	*	8					
28	V522-100-801-80	PIN,ST,A/8X18	*	2					

FIG. 58 CASE(REAR)SYSTEM(DF TYPE)(2/2)

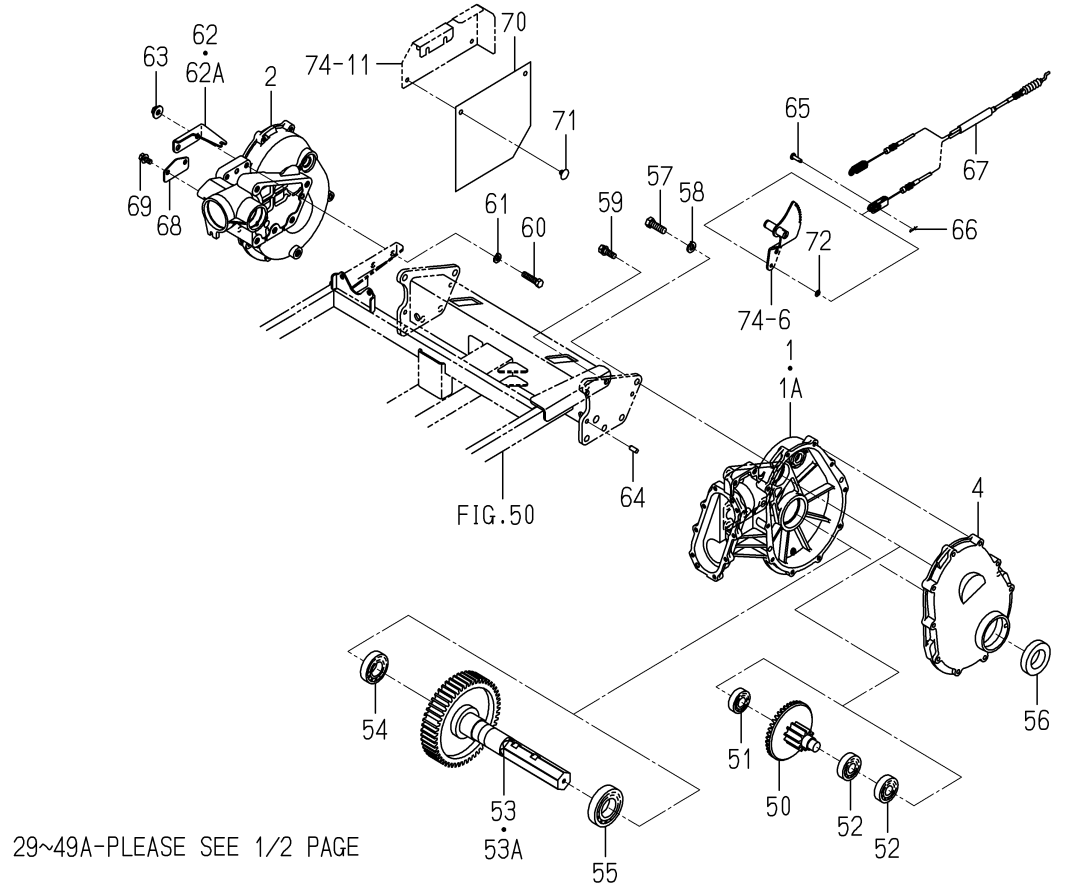

2232-330M-0100

KEY	PART CODE	DESCRIPTION	SPC	TYPE OF MODEL NP60E16		ITC	COL	GRP	REMARKS
29	V600-110-620-40	BEARING,RB/6204	*	1					
30	2161-330-004-00	SEAL,OIL/SDD7/204	*	1					
31	2232-330-012-00	CLUTCH/DRIVEN/FERTIL	*	1 -1105					
31A	2233-330-053-00	CLUTCH/DRIVEN/FERTIL	*	1 1106-					
32	V600-110-620-60	BEARING,RB/6206	*	1 -1105					
32A	V600-110-630-40	BEARING,RB/6304	*	1 1106-					
33	2232-330-054-00	METAL/52X62X16	*	1 1106-					
34	V707-140-062-00	RING,SNAP/R62	*	1					
35	2232-330-022-00	SEAL/OIL	*	1					
36	2194-419-009-00	WASHER/20X28X01	*	1 1106-					
37	2232-330-039-00	SHAFT/FERTILIZE	*	1					
38	V600-110-620-40	BEARING,RB/6204	*	1					
39	V705-140-047-00	RING,SNAP/47 C	*	1					
40	V704-140-020-00	RING,SNAP/20 C	*	1					
41	2161-330-004-00	SEAL,OIL/SDD7/204	*	1					
42	2232-330-220-00	SHIFTER/FERTILIZER	*	2					
43	V705-140-025-00	RING,SNAP/25 C	*	2					
44	V744-112-250-70	SEAL,OIL/TC12257	*	2					
45	2232-330-041-10	ARM/CLUCH/FERTILIZE	*	1					
46	2233-330-051-00	ARM/CLUCH/ROTOR	*	1					
47	3560-503-302-00	WASHER,WIRE TENSION	*	2					
48	V210-260-601-60	BOLT,S/M6X16	*	2					
49	2232-330-043-00	SPRING/HT015	*	2 -60					
49A	2232-330-043-10	SPRING/HT015	*	2 61-		1			
50	2233-330-200-10	SHAFT/COUNTER/41-9	*	2					
51	1564-263-002-00	BEARING,BALL	*	2					
52	V600-110-630-40	BEARING,RB/6304	*	4					
53	2233-330-230-10	SHAFT/REAR/WHEEL/8	*	2 -630		1			
53A	2233-330-230-20	SHAFT/REAR/WHEEL/8	*	2 631-		1			
54	V600-110-620-60	BEARING,RB/6206	*	2					

FIG. 58 CASE(REAR)SYSTEM(DF TYPE)(2/2)

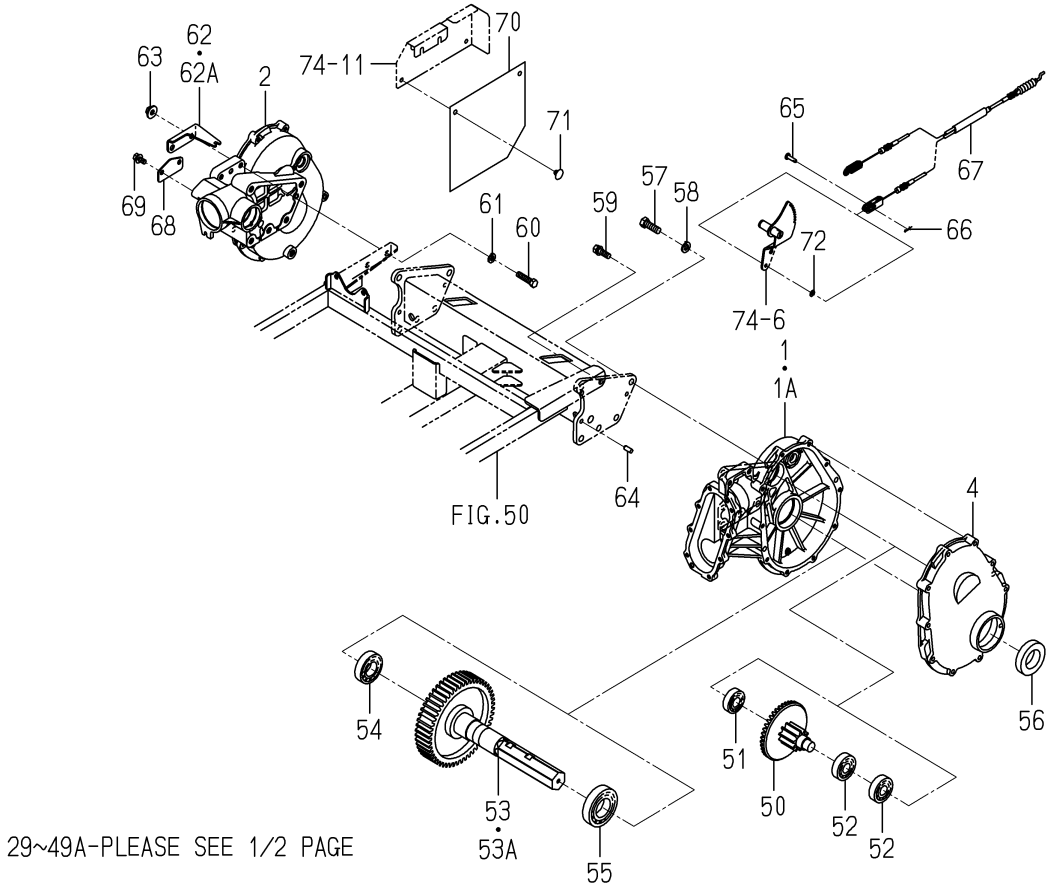

2232-330M-0100

KEY	PART CODE	DESCRIPTION	SPC	TYPE OF MODEL NP60E16		ITC	COL	GRP	REMARKS
55	V600-110-620-80	BEARING,RB/6208	*	2					
56	2162-330-007-00	SEAL,WHEEL SHAFT	*	2					
57	2232-330-045-00	BOLT/SEAL/M12X35	*	10					
58	V402-160-012-00	WASHER,SP/M12	*	10					
59	2204-323-011-00	BOLT/SEAL/M10X30/S	*	2					
60	V201-361-004-0B	BOLT/M10X40/7T,SEAL	*	2					
61	V401-160-010-00	WASHER,SP/M10	*	2					
62	2233-581-001-00	PLATE/CABLE/HOLDER	*	1 -176					
62A	2233-581-001-20	PLATE/CABLE/HOLDER	*	1 177-		1			
63	V363-260-010-00	NUT/WASHER/M10	*	2					
64	V522-100-801-80	PIN,ST,A/8X18	*	4					
65	2111-441-019-20	PIN/2	*	1					
66	2161-735-005-00	PIN	*	1					
67	2232-330-047-00	CABLE/CLUTCH/FERTILI	*	1					
68	2232-330-052-00	COVER/CLUTCH/FERTILI	*	1 61-					
69	V211-360-802-00	BOLT,SP/M8X20	*	2					
70	2232-422-025-00	COVER/FERTIRIZE CLUT	*	1					
71	2186-508-017-00	CLIP,MAT/SUNSET GRAY	*	2					
72	V411-260-006-00	WASHER,PL/M6	*	1					

FIG. 59 CASE(REAR)SYSTEM(GF TYPE)(1/2)

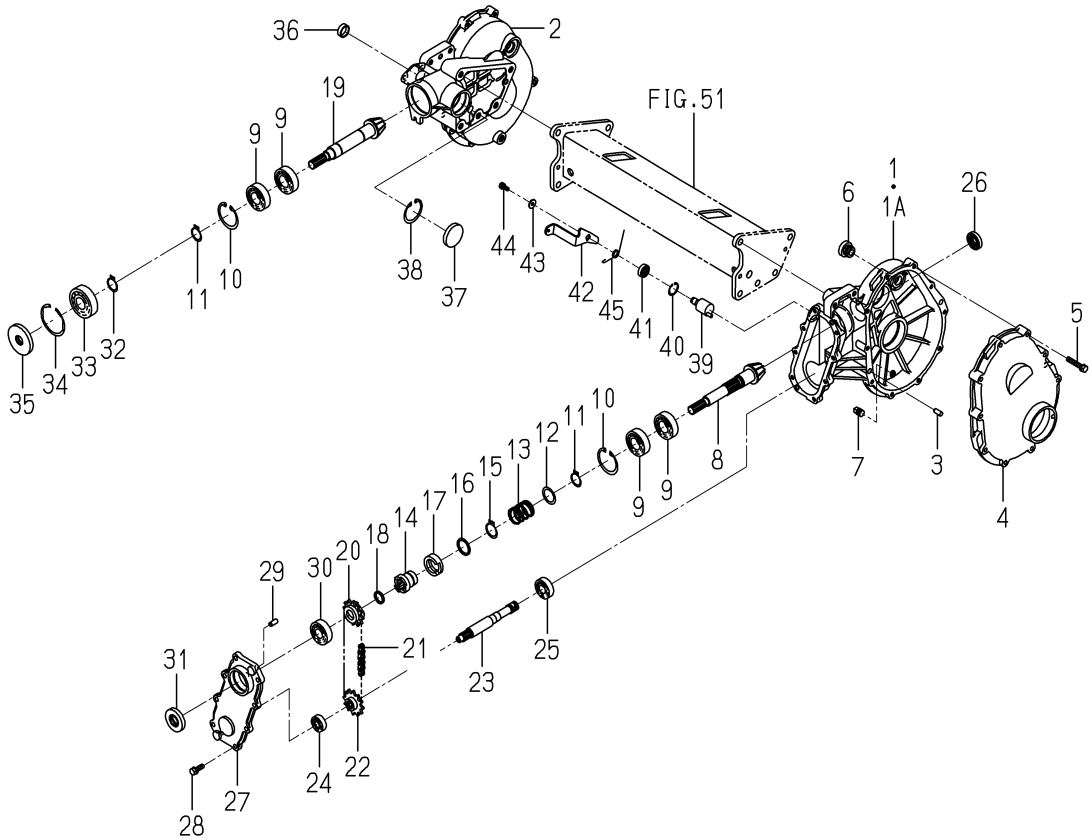

2232-330R-0100

KEY	PART CODE	DESCRIPTION	SPC	TYPE OF MODEL NP60E16		ITC	COL	GRP	REMARKS
1	2232-330-001-20	CASE/REAR/IN/LH	*	1 -1637					
1A	2232-330-001-30	CASE/REAR/IN/LH	*	1 1638-		1			
2	2232-330-002-20	CASE/REAR/IN/RH	*	1					
3	V522-100-801-80	PIN,ST,A/8X18	*	4					
4	2213-330-006-10	CASE/REAR/OUT/8D	*	2					
5	V211-560-804-50	BOLT,S/M8X45/7T	*	20					
6	2157-201-004-10	PLUG,OIL	*	2					
7	V781-160-000-4B	PLUG/SCREW/SEAL	*	2					
8	2232-330-006-00	GEAR/BEVEL/10/FERTIL	*	1					
9	V600-110-620-50	BEARING,RB/6205	*	4					
10	V705-140-052-00	RING,SNAP/52 C	*	2					
11	V704-140-025-00	RING,SNAP/25 C	*	2					
12	2232-330-033-00	WASHER/27X36X1	*	1					
13	2232-330-053-00	SPRING/HC033	*	1					
14	2232-330-013-10	CLUTCH/DRIVE	*	1					
15	V704-140-028-00	RING,SNAP/28 C	*	1					
16	2232-330-042-00	COLLAR/28X35X02	*	1					
17	2232-330-018-50	COLLAR/CLUTCH	*	1					
18	2232-330-032-00	COLLAR/20X25X3.2	*	1					
19	2232-330-005-00	GEAR/BEVEL/10)	*	1					
20	2232-330-015-00	SPROCKET/12/DRIVE	*	1					
21	2232-330-023-00	CHAIN/ROLLER/41X034	*	1					
22	2232-330-016-10	SPROCKET/12/DRIVEN	*	1					
23	2232-330-017-00	SHAFT/OUTPUT/ROTOR	*	1					
24	V600-110-620-10	BEARING,RB/6201	*	1					
25	V600-110-620-30	BEARING,RB/6203	*	1					
26	V744-117-350-70	SEAL,OIL/TC17357	*	1					
27	2232-330-004-00	COVER/REAR/INPUT	*	1					
28	V211-260-802-50	BOLT,S/M8X25	*	8					
29	V522-100-801-80	PIN,ST,A/8X18	*	2					

FIG. 59 CASE(REAR)SYSTEM(GF TYPE)(2/2)

30~45-PLEASE SEE 1/2 PAGE

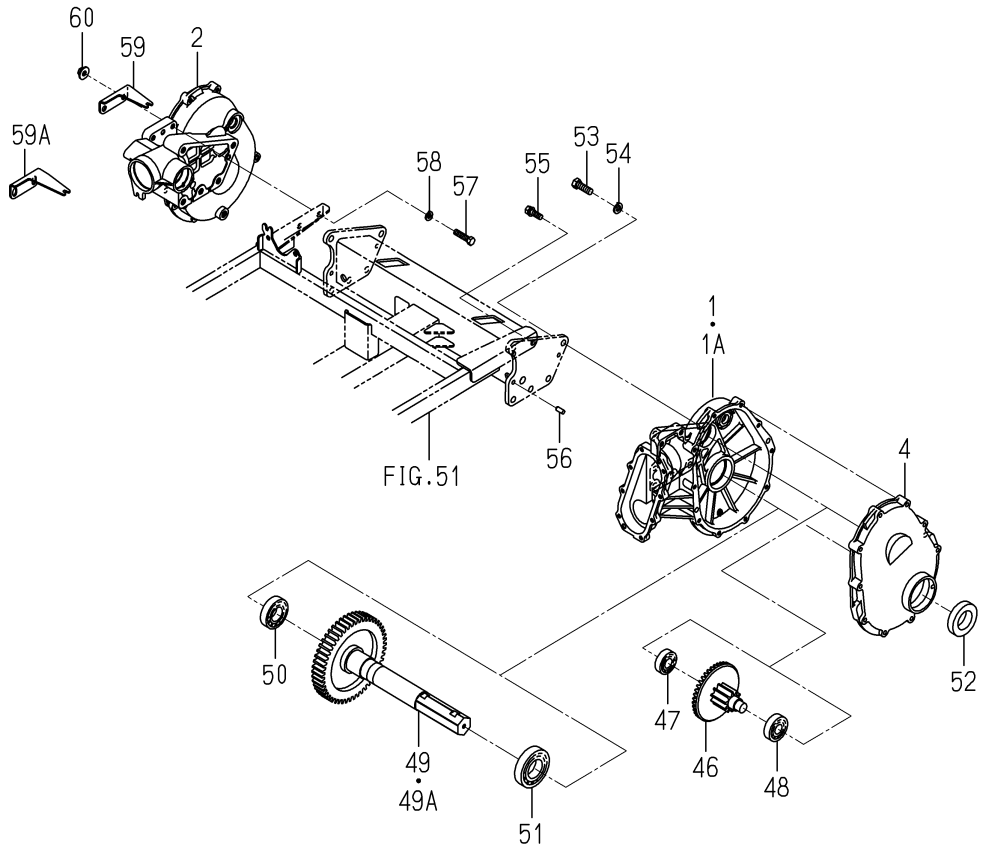

2232-330R-0100

KEY	PART CODE	DESCRIPTION	SPC	TYPE OF MODEL NP60E16		ITC	COL	GRP	REMARKS
30	V600-110-620-40	BEARING,RB/6204	*	1					
31	2161-330-004-00	SEAL,OIL/SDD7/204	*	1					
32	V704-140-025-00	RING,SNAP/25 C	*	1					
33	V600-110-630-50	BEARING,RB/6305	*	1					
34	V707-140-062-00	RING,SNAP/R62	*	1					
35	2232-330-022-00	SEAL/OIL	*	1					
36	2194-419-020-00	PLUG/25X08	*	1					
37	2194-701-010-00	PLUG/47	*	1					
38	V705-140-047-00	RING,SNAP/47 C	*	1					
39	2232-330-220-00	SHIFTER/FERTILIZER	*	1					
40	V705-140-025-00	RING,SNAP/25 C	*	1					
41	V744-112-250-70	SEAL,OIL/TC12257	*	1					
42	2233-330-051-00	ARM/CLUCH/ROTOR	*	1					
43	3560-503-302-00	WASHER,WIRE TENSION	*	1					
44	V210-260-601-60	BOLT,S/M6X16	*	1					
45	2232-330-043-10	SPRING/HT015	*	1					
46	2232-330-250-00	SHAFT/COUNTER/41-10	*	2					
47	V600-110-620-40	BEARING,RB/6204	*	2					
48	V600-110-630-40	BEARING,RB/6304	*	2					
49	2232-330-260-20	SHAFT/REAR/WHEEL/6	*	2 -630					
49A	2232-330-260-30	SHAFT/REAR/WHEEL/6	*	2 631-		1			
50	V600-110-620-60	BEARING,RB/6206	*	2					
51	V600-110-620-80	BEARING,RB/6208	*	2					
52	2162-330-007-00	SEAL,WHEEL SHAFT	*	2					
53	2232-330-045-00	BOLT/SEAL/M12X35	*	10					
54	V402-160-012-00	WASHER,SP/M12	*	10					
55	2204-323-011-00	BOLT/SEAL/M10X30/S	*	4					
56	V522-100-801-80	PIN,ST,A/8X18	*	4					
57	V201-361-004-0B	BOLT/M10X40/7T,SEAL	*	2					
58	V401-160-010-00	WASHER,SP/M10	*	2					

FIG. 59 CASE(REAR)SYSTEM(GF TYPE)(2/2)

30~45-PLEASE SEE 1/2 PAGE

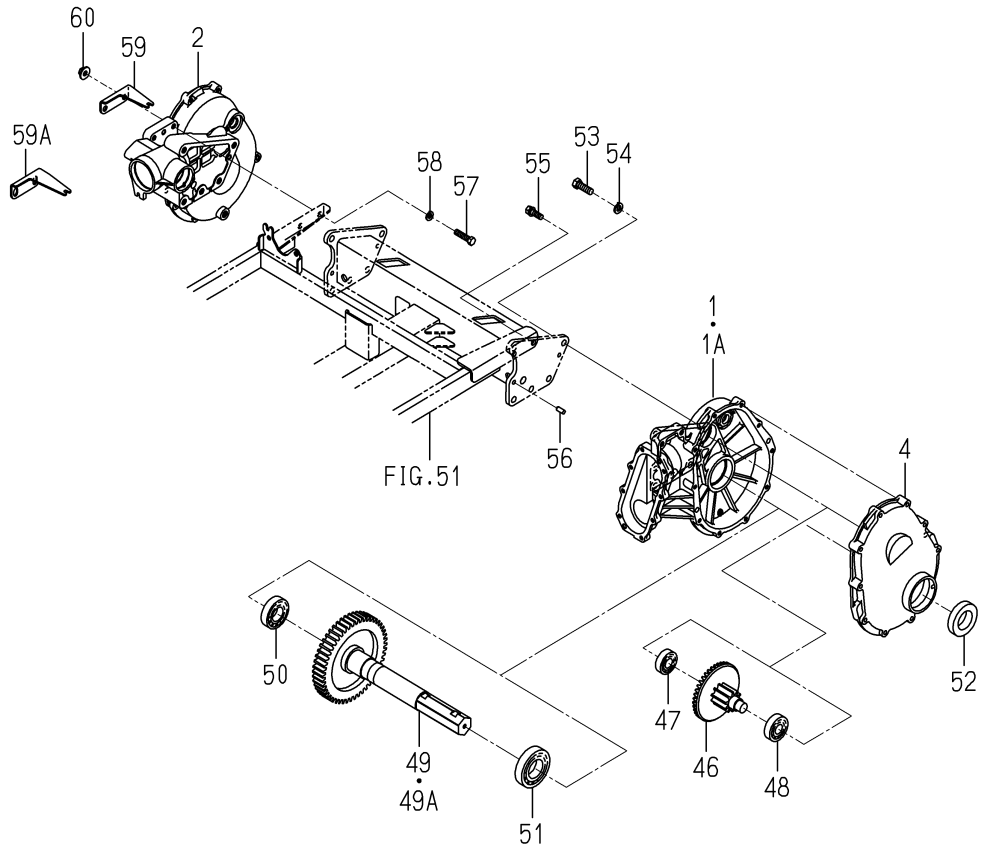

2232-330R-0100

KEY	PART CODE	DESCRIPTION	SPC	TYPE OF MODEL NP60E16		ITC	COL	GRP	REMARKS
59	2233-581-001-00	PLATE/CABLE/HOLDER	*	1 -176					
59A	2233-581-001-20	PLATE/CABLE/HOLDER	*	1 177-		1			
60	V363-260-010-00	NUT/WASHER/M10	*	2					

FIG. 60 CASE(REAR)SYSTEM(DF TYPE)(1/2)

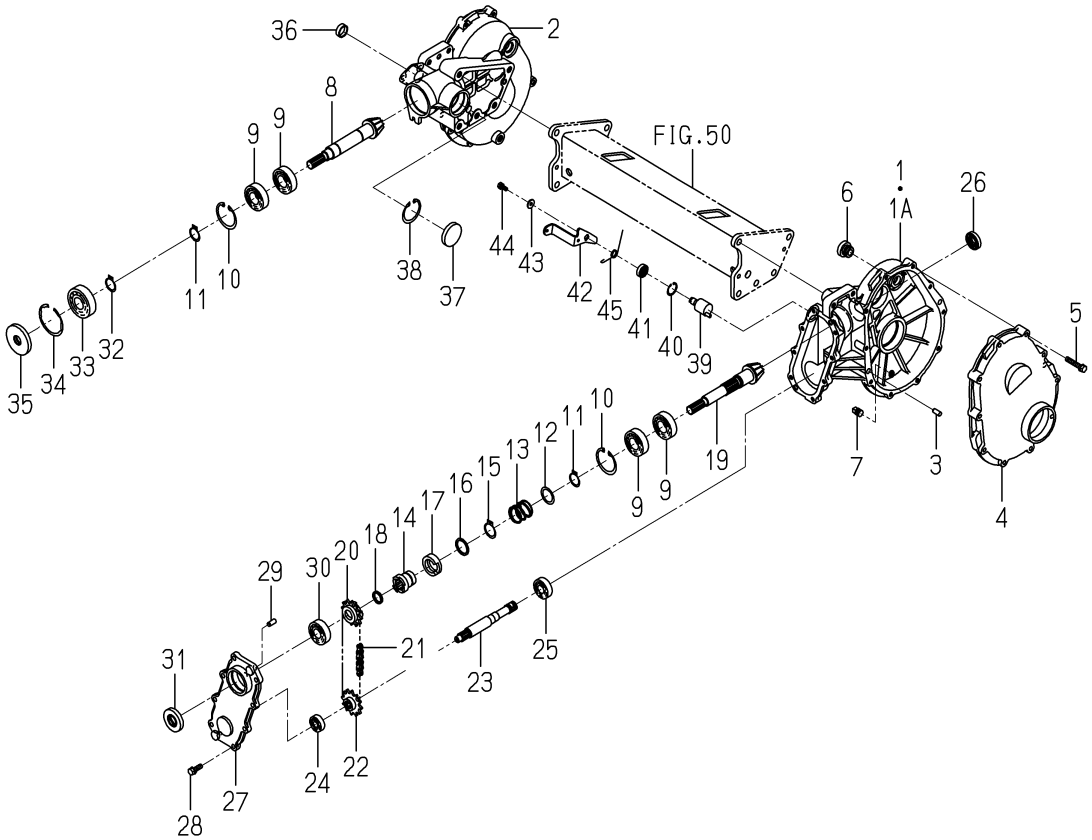

2232-330S-0100

KEY	PART CODE	DESCRIPTION	SPC	TYPE OF MODEL NP60E16		ITC	COL	GRP	REMARKS
1	2232-330-001-20	CASE/REAR/IN/LH	*	1 -1637					
1A	2232-330-001-30	CASE/REAR/IN/LH	*	1 1638-		1			
2	2232-330-002-20	CASE/REAR/IN/RH	*	1					
3	V522-100-801-80	PIN,ST,A/8X18	*	4					
4	2213-330-006-10	CASE/REAR/OUT/8D	*	2					
5	V211-560-804-50	BOLT,S/M8X45/7T	*	20					
6	2157-201-004-10	PLUG,OIL	*	2					
7	V781-160-000-4B	PLUG/SCREW/SEAL	*	2					
8	2233-330-004-10	GEAR/BEVEL/10/8	*	1					
9	1594-221-001-00	BEARING/BALL 6205SH2	*	4					
10	V705-140-052-00	RING,SNAP/52 C	*	2					
11	V704-140-025-00	RING,SNAP/25 C	*	2					
12	2232-330-033-00	WASHER/27X36X1	*	1					
13	2232-330-053-00	SPRING/HC033	*	1					
14	2232-330-013-10	CLUTCH/DRIVE	*	1					
15	V704-140-028-00	RING,SNAP/28 C	*	1					
16	2232-330-042-00	COLLAR/28X35X02	*	1					
17	2232-330-018-50	COLLAR/CLUTCH	*	1					
18	2232-330-032-00	COLLAR/20X25X3.2	*	1					
19	2233-330-005-10	GEAR/BEVEL/10/FERTIL	*	1					
20	2232-330-015-00	SPROCKET/12/DRIVE	*	1					
21	2232-330-023-00	CHAIN/ROLLER/41X034	*	1					
22	2232-330-016-10	SPROCKET/12/DRIVEN	*	1					
23	2232-330-017-00	SHAFT/OUTPUT/ROTOR	*	1					
24	V600-110-620-10	BEARING,RB/6201	*	1					
25	V600-110-620-30	BEARING,RB/6203	*	1					
26	V744-117-350-70	SEAL,OIL/TC17357	*	1					
27	2232-330-004-00	COVER/REAR/INPUT	*	1					
28	V211-260-802-50	BOLT,S/M8X25	*	8					
29	V522-100-801-80	PIN,ST,A/8X18	*	2					

FIG. 60 CASE(REAR)SYSTEM(DF TYPE)(2/2)

30~45-PLEASE SEE 1/2 PAGE

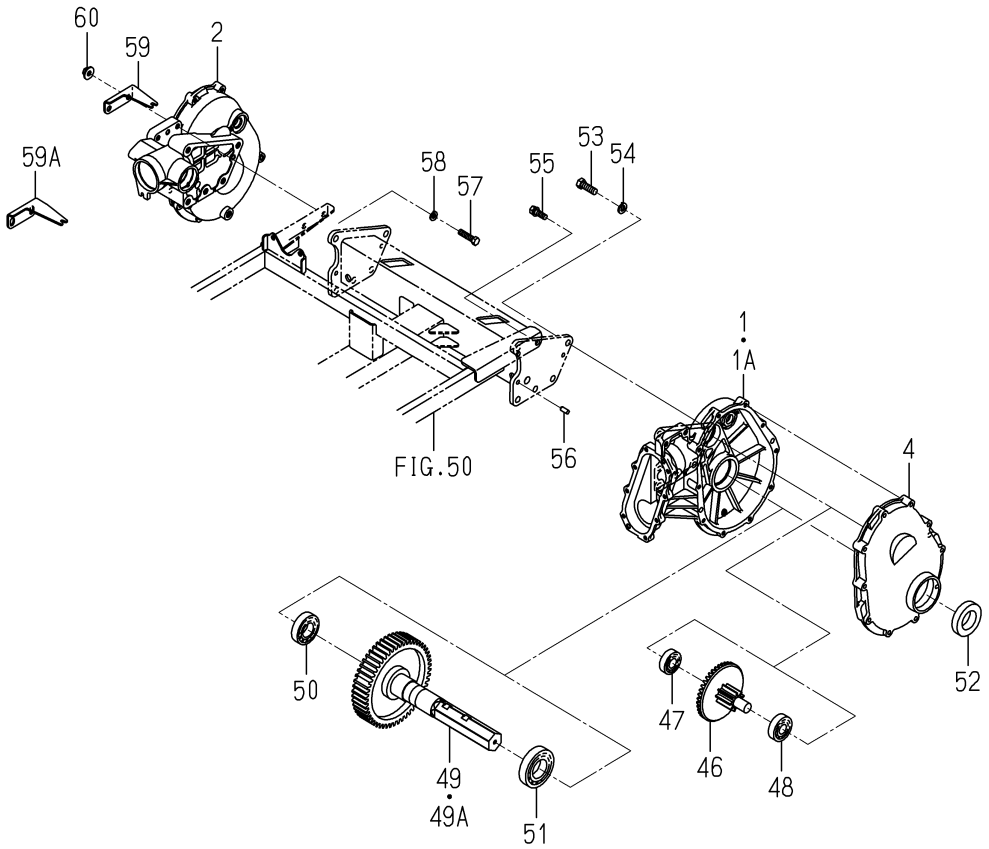

2232-330S-0100

KEY	PART CODE	DESCRIPTION	SPC	TYPE OF MODEL NP60E16		ITC	COL	GRP	REMARKS
30	V600-110-620-40	BEARING,RB/6204	*	1					
31	2161-330-004-00	SEAL,OIL/SDD7/204	*	1					
32	V704-140-025-00	RING,SNAP/25 C	*	1					
33	V600-110-630-50	BEARING,RB/6305	*	1					
34	V707-140-062-00	RING,SNAP/R62	*	1					
35	2232-330-022-00	SEAL/OIL	*	1					
36	2194-419-020-00	PLUG/25X08	*	1					
37	2194-701-010-00	PLUG/47	*	1					
38	V705-140-047-00	RING,SNAP/47 C	*	1					
39	2232-330-220-00	SHIFTER/FERTILIZER	*	1					
40	V705-140-025-00	RING,SNAP/25 C	*	1					
41	V744-112-250-70	SEAL,OIL/TC12257	*	1					
42	2233-330-051-00	ARM/CLUCH/ROTOR	*	1					
43	3560-503-302-00	WASHER,WIRE TENSION	*	1					
44	V210-260-601-60	BOLT,S/M6X16	*	1					
45	2232-330-043-10	SPRING/HT015	*	1					
46	2233-330-200-10	SHAFT/COUNTER/41-9	*	2					
47	1564-263-002-00	BEARING,BALL	*	2					
48	1560-214-003-00	BEARING/BALL/6304SH2	*	4					
49	2233-330-230-10	SHAFT/REAR/WHEEL/8	*	2 -630					
49A	2233-330-230-20	SHAFT/REAR/WHEEL/8	*	2 631-		1			
50	V600-110-620-60	BEARING,RB/6206	*	2					
51	V600-110-620-80	BEARING,RB/6208	*	2					
52	2162-330-007-00	SEAL,WHEEL SHAFT	*	2					
53	2232-330-045-00	BOLT/SEAL/M12X35	*	10					
54	V402-160-012-00	WASHER,SP/M12	*	10					
55	2204-323-011-00	BOLT/SEAL/M10X30/S	*	4					
56	V522-100-801-80	PIN,ST,A/8X18	*	4					
57	V201-361-004-0B	BOLT/M10X40/7T,SEAL	*	2					
58	V401-160-010-00	WASHER,SP/M10	*	2					

FIG. 60 CASE(REAR)SYSTEM(DF TYPE)(2/2)

30~45-PLEASE SEE 1/2 PAGE

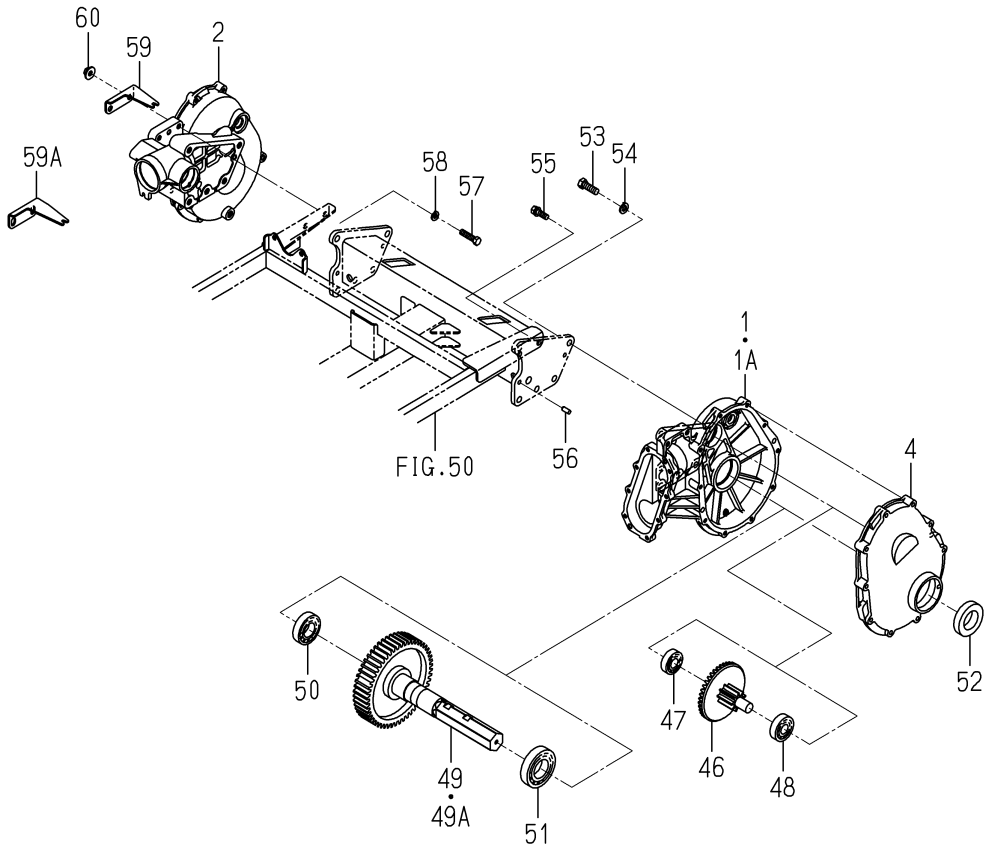

2232-330S-0100

KEY	PART CODE	DESCRIPTION	SPC	TYPE OF MODEL NP60E16		ITC	COL	GRP	REMARKS
59	2233-581-001-00	PLATE/CABLE/HOLDER	*	1-176					
59A	2233-581-001-20	PLATE/CABLE/HOLDER	*	1177-2		1			
60	V363-260-010-00	NUT/WASHER/M10	*						

FIG. 61 WHEEL(STEERING)SYSTEM

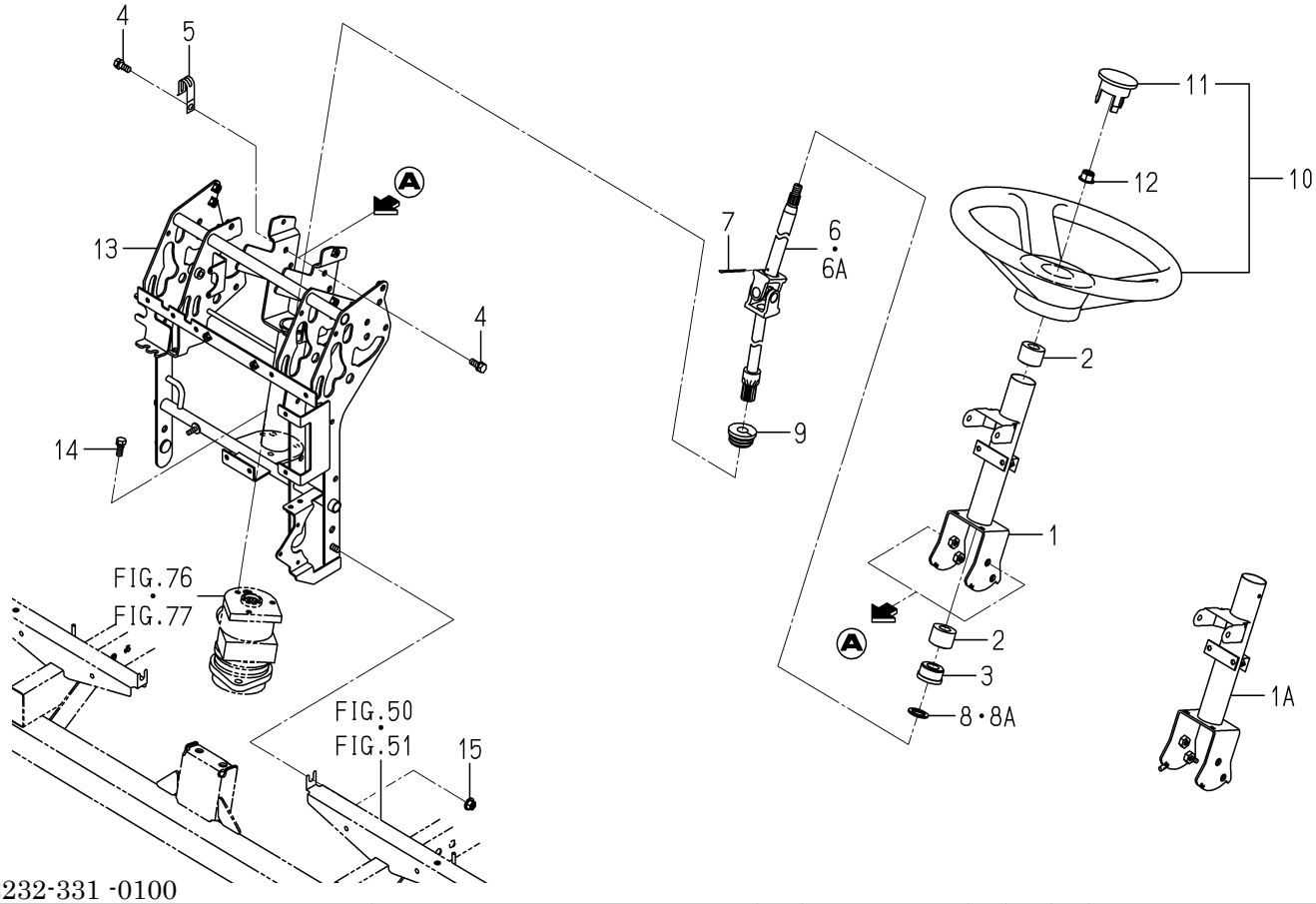

2232-331 -0100

KEY	PART CODE	DESCRIPTION	SPC	TYPE OF MODEL NP60E16		ITC	COL	GRP	REMARKS
1	2232-331-250-20	COLUMN/UPPER/NP COMP	*	1 -1201					
1A	2232-331-250-30	COLUMN/UPPER/NP COMP	*	1 1202-		1			
2	1426-406-203-00	BUSH,COLUMN	*	2					
3	2144-301-005-10	BUSH/19X35X20	*	1					
4	V211-260-802-00	BOLT,S/M8X20	*	4					
5	1425-621-004-00	HOLDER/JE/9-9	*	1 1188-					
6	2232-331-240-10	SHAFT/STEERING/NP	*	1 -629					
6A	2232-331-240-20	SHAFT/STEERING/NP	*	1 630-		1			
7	V500-163-004-00	PIN,SPLIT/3X40	*	1					
8	2130-755-002-00	WASHER,STAND SPRING	*	1 -60					
8A	2151-602-006-00	WASHER/21X32X03	*	1 61-					
9	2204-331-008-00	GROMMET/COLUMN	*	1					
10	2232-331-300-00	STEERING/NP ASSY	*	1					
11	2232-331-302-00	CAP	*	1					
12	2188-301-006-00	NUT/U/M12	*	1					
13	2232-331-200-30	COLUMN/LOWER/NP COMP	*	1					
14	V211-260-801-60	BOLT,S/M8X16	*	3					
15	V362-260-008-00	NUT/WASHER/M8	*	2					

FIG. 62 CASE(REAR)SYSTEM

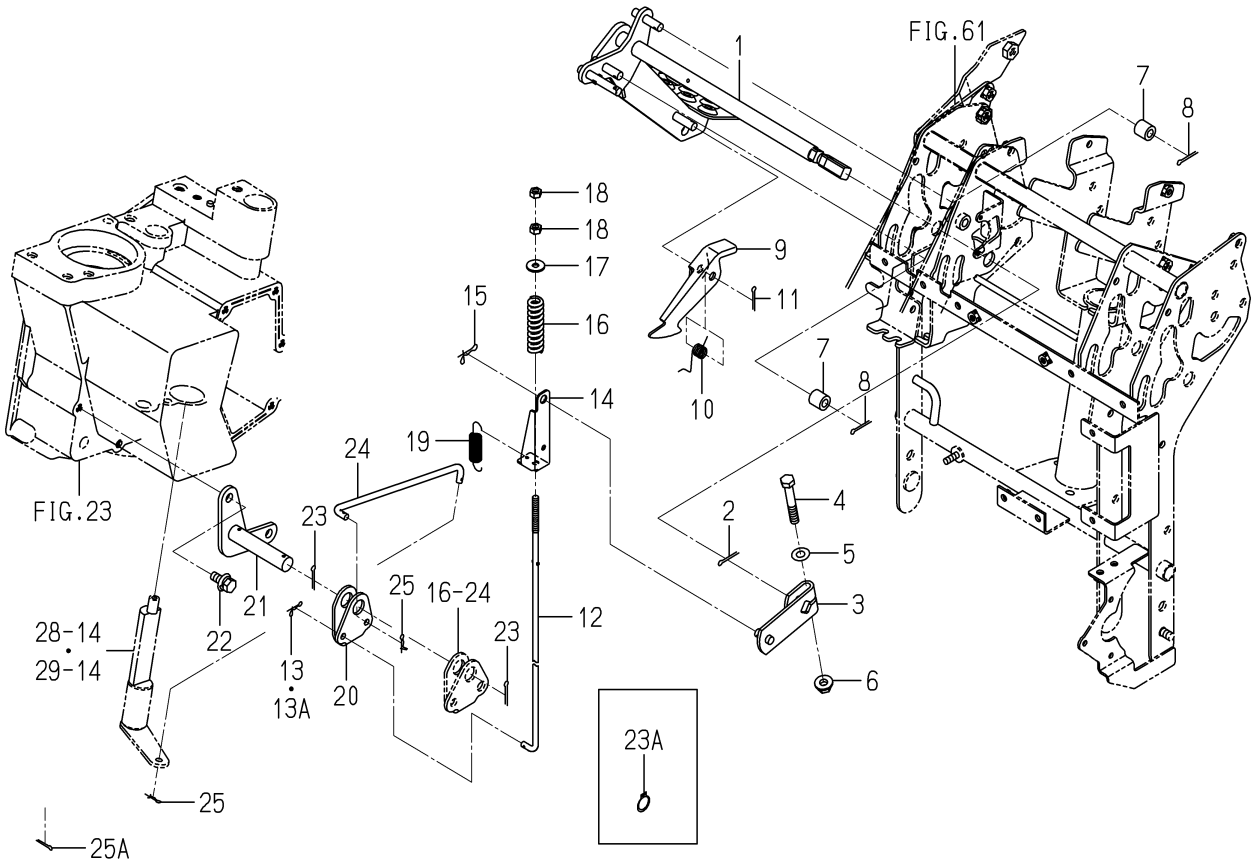

2232-336 -0100

KEY	PART CODE	DESCRIPTION	SPC	TYPE OF MODEL NP60E16		ITC	COL	GRP	REMARKS
1	2232-336-250-20	PEDAL/BRAKE/NP COMP	*	1					
2	V500-163-002-00	PIN,SPLIT/3X20	*	1					
3	2232-336-260-00	ARM/BRAKE/NP COMP	*	1					
4	V201-260-805-00	BOLT/M8X50	*	1					
5	V411-260-008-00	WASHER,PL/M8	*	1					
6	V362-260-008-00	NUT/WASHER/M8	*	1					
7	2204-336-002-00	COLLER/8X15X15	*	2					
8	V500-163-002-00	PIN,SPLIT/3X20	*	2					
9	2232-336-005-00	LOCK/BRAKE	*	1					
10	2204-336-009-00	SPRING/HT012	*	1					
11	V500-163-002-00	PIN,SPLIT/3X20	*	1					
12	2232-336-002-00	ROD/BRAKE/UPPER/NP	*	1					
13	2161-735-005-00	PIN	*	1 -632					
13A	V500-162-501-50	PIN,SPLIT/2.5X15	*	1 633-					
14	2204-336-005-00	PLATE/ROD	*	1					
15	2161-735-006-00	PIN/STOPPER/8	*	1					
16	2171-519-019-10	SPRING/HC058	*	1					
17	3560-503-302-00	WASHER,WIRE TENSION	*	1					
18	V301-260-006-00	NUT/M6	*	2					
19	2209-518-002-10	SPRING/HE070	*	1					
20	2232-336-001-00	PLATE/COUNTER/BRAKE/	*	1					
21	2232-336-200-20	BASE/COUNTER/NP COMP	*	1					
22	V211-360-802-00	BOLT,SP/M8X20	*	2					
23	V500-163-002-00	PIN,SPLIT/3X20	*	2 -60					
23A	V704-140-015-00	RING,SNAP/15 C	*	2 61-					
24	2232-336-003-00	ROD/BRAKE/LOWER/NP	*	1					
25	2161-735-005-00	PIN	*	2 -632					
25A	V500-162-501-50	PIN,SPLIT/2.5X15	*	2 633-					

FIG. 63 BUMPER SYSTEM

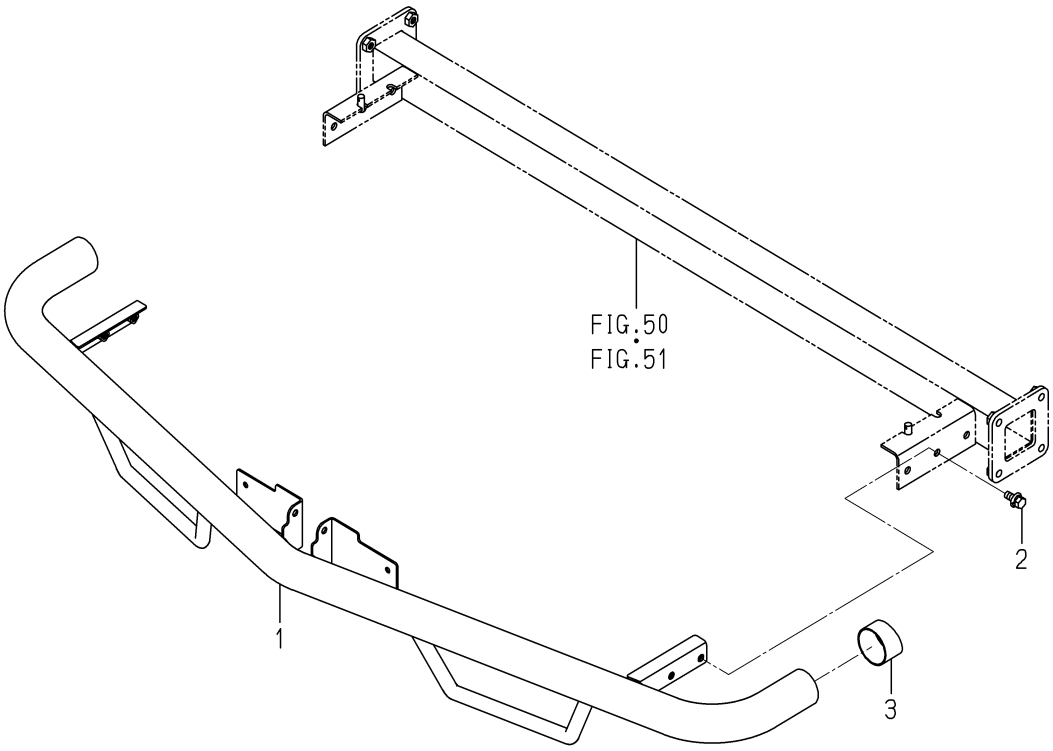

2232-343 -0100

KEY	PART CODE	DESCRIPTION	SPC	TYPE OF MODEL NP60E16		ITC	COL	GRP	REMARKS
1	2232-343-200-20	BUMPER/NP COMP	*	1			5N		
2	V211-360-802-00	BOLT,SP/M8X20	*	4					
3	2204-343-001-00	CAP/BUMPER	*	2					

FIG. 64 PUMP SYSTEM

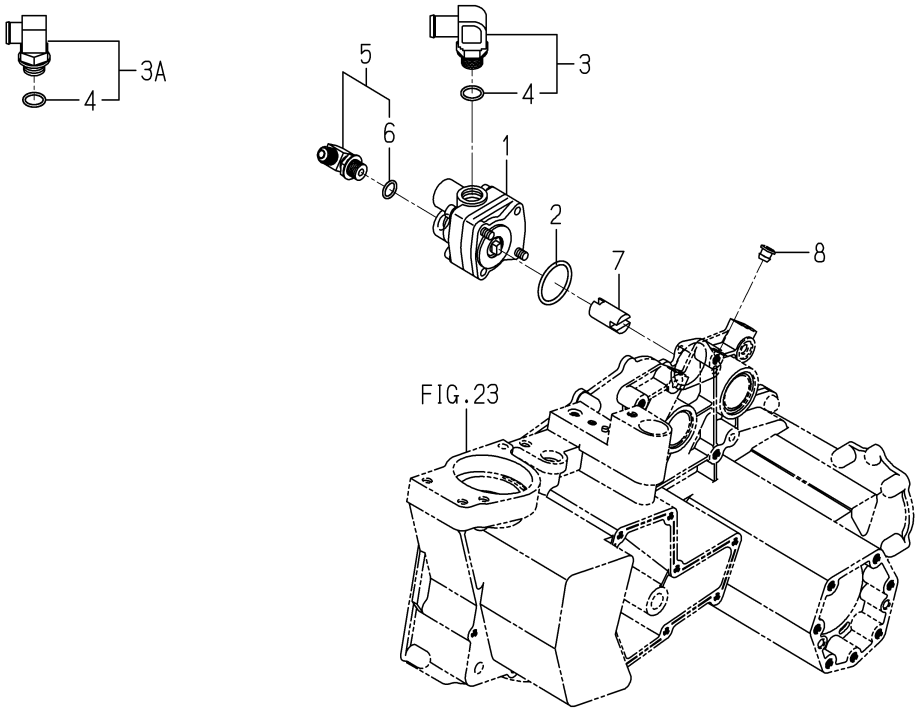

2232-401 -0100

KEY	PART CODE	DESCRIPTION	SPC	TYPE OF MODEL NP60E16		ITC	COL	GRP	REMARKS
1	2204-401-200-00	PUMP/PZ	*	1					
2	V720-103-503-90	O-RING/1A,P39	*	1					
3	2512-501-240-00	ADAPTER/G1/2-L20	*	1 -60					
3A	2186-401-001-10	ADAPTER/90 G1/2 ASSY	*	1 61-					
4	V720-112-401-80	O-RING/1B,P18	*	1 -60					
5	3805-354-280-00	ADAPTOR/G3/8XM16ASSY	*	1					
6	V720-112-401-40	O-RING/1B,P14	*	1					
7	2232-401-001-00	COUPLING/PUMP	*	1					
8	2186-738-038-20	CAP/10	*	1					

FIG. 65 CYLINDER SYSTEM

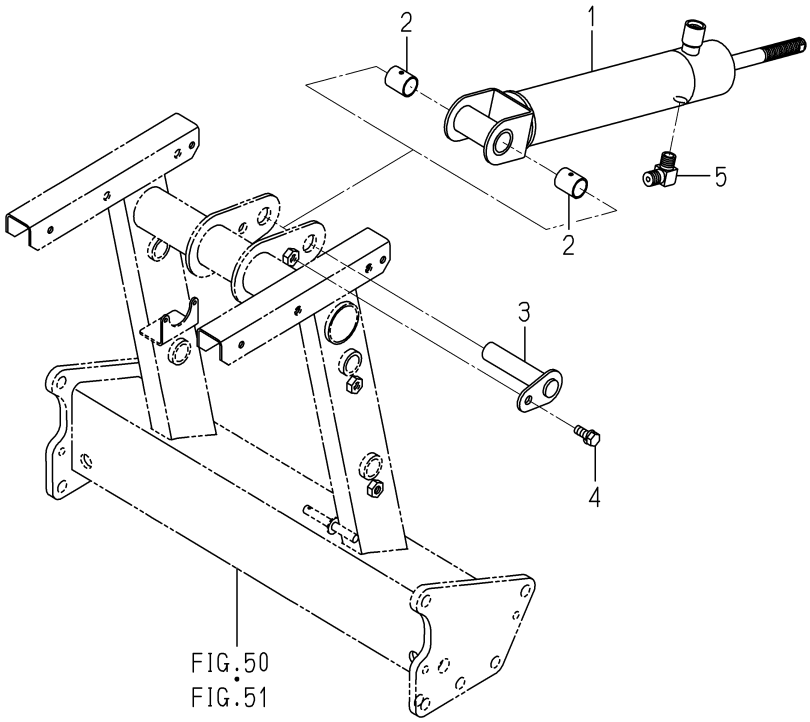

2232-407 -0100

KEY	PART CODE	DESCRIPTION	SPC	TYPE OF MODEL NP60E16		ITC	COL	GRP	REMARKS
1	2232-407-200-20	CYLINDER COMP	*	1					
2	P112-711-201-00	BUSH/18X21X25	*	2					
3	2232-407-210-00	PIN/18X83 COMP	*	1					
4	V211-260-802-00	BOLT,S/M8X20	*	1					
5	3768-185-022-10	ADAPTER/90DEG/PUMP	*	1					

FIG. 66 PIPING SYSTEM

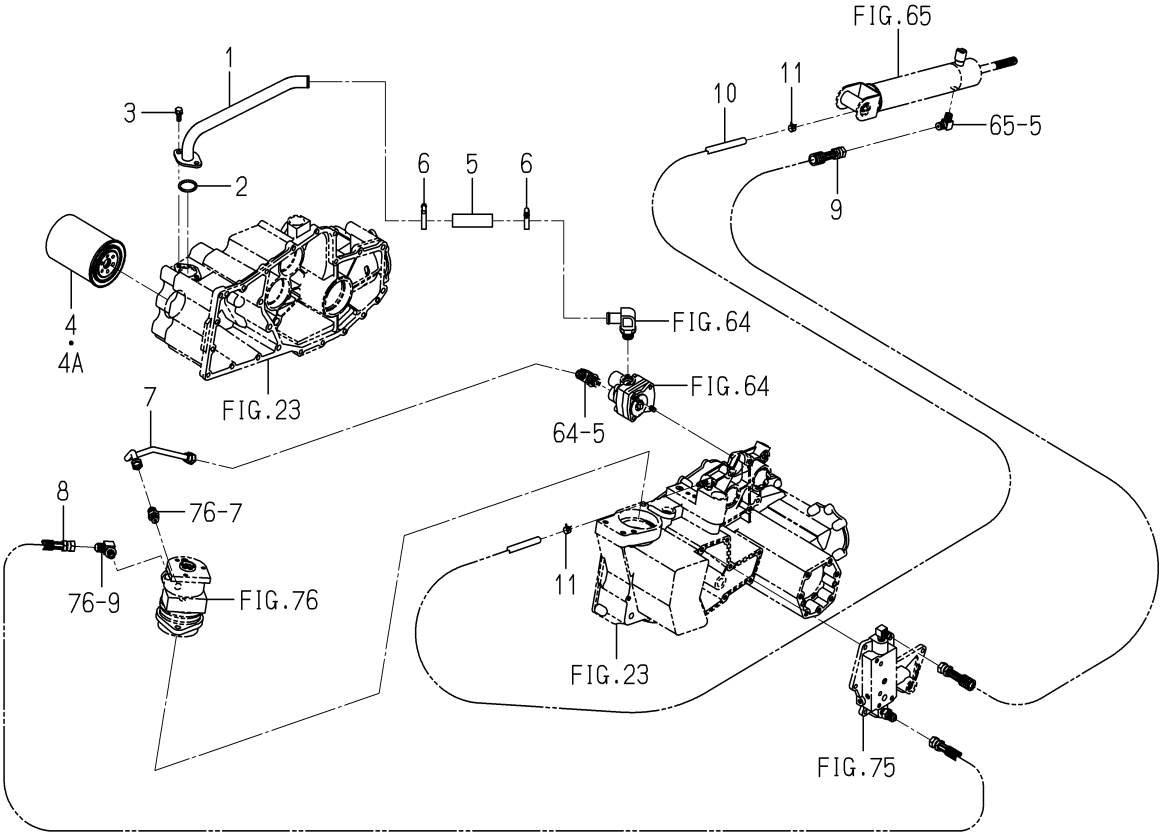

2232-409 -0100

KEY	PART CODE	DESCRIPTION	SPC	TYPE OF MODEL NP60E16		ITC	COL	GRP	REMARKS
1	2232-409-200-00	ADAPTER/SUCTION COMP	*	1					
2	V720-103-503-00	O-RING/1A,P30	*	1					
3	V211-260-802-00	BOLT,S/M8X20	*	2					
4	2232-409-007-00	CARTRIDGE	*	1 -60					
4A	2232-409-007-10	CARTRIDGE	*	1 61-		1			
5	1725-508-001-00	HOSE/19X25X80	*	1					
6	J061-120-032-00	CLAMP/WORM/20-32	*	2					
7	2232-409-001-10	PIPING/PUMP/POWER ST	*	1		1			
8	3676-374-310-00	HOSE,HYDRAULIC/750 A	*	1					
9	3650-375-200-00	HOSE/HYDRAULIC/2150	*	1					
10	2232-409-004-10	HOSE(8X12X1600)	*	1					
11	J062-119-126-00	CLIP/HOSE/11.9-12.6	*	2					

FIG. 67 ARM(CYLINDER)SYSTEM(G TYPE)

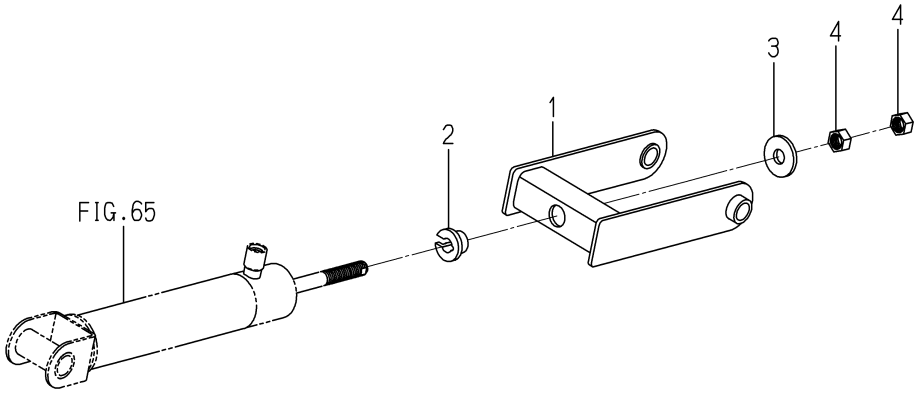

2232-411 -0100

KEY	PART CODE	DESCRIPTION	SPC	TYPE OF MODEL NP60E16		ITC	COL	GRP	REMARKS
1	2232-411-200-00	ARM/CYLINDER COMP	*	1					
2	2204-411-001-00	BUSH	*	1					
3	2232-411-001-00	WASHER/15X40X05	*	1					
4	V304-260-014-00	NUT/M14	*	2					

FIG. 68 ARM(CYLINDER)SYSTEM(D TYPE)

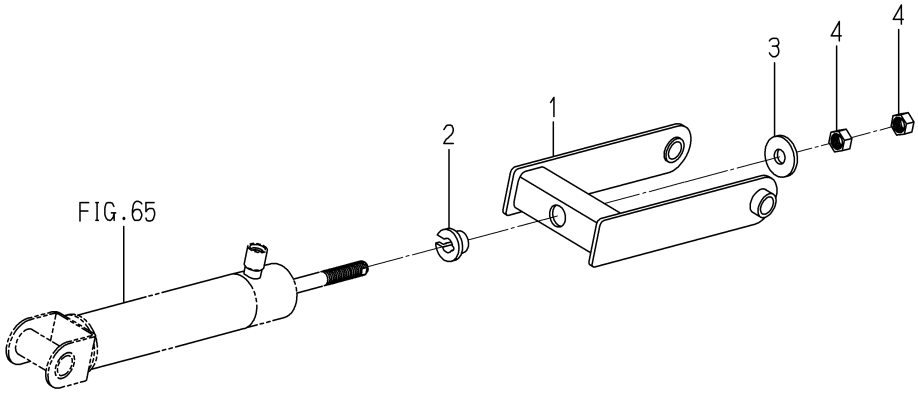

2232-411D-0100

KEY	PART CODE	DESCRIPTION	SPC	TYPE OF MODEL NP60E16		ITC	COL	GRP	REMARKS
1	2232-411-300-00	ARM/CYLINDER/6D COMP	*	1					
2	2204-411-001-00	BUSH	*	1					
3	2232-411-001-00	WASHER/15X40X05	*	1					
4	V304-260-014-00	NUT/M14	*	2					

FIG. 69 ACCUMULATOR SYSTEM

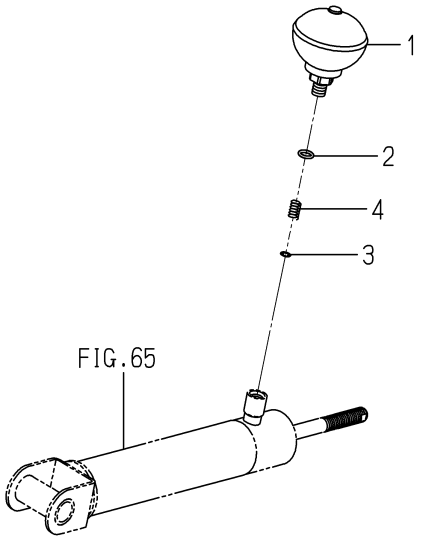

2232-413 -0100

KEY	PART CODE	DESCRIPTION	SPC	TYPE OF MODEL NP60E16		ITC	COL	GRP	REMARKS
1	2232-413-300-00	ACCUMULATOR ASSY	*	1					
2	V720-112-401-10	O-RING/1B,P11	*	1					
3	2213-413-001-10	WASHER/09X11X1.6	*	1					
4	K270-012-103-00	SPRING/HC017	*	1					

FIG. 70 LINK(LOWER)SYSTEM(G TYPE)

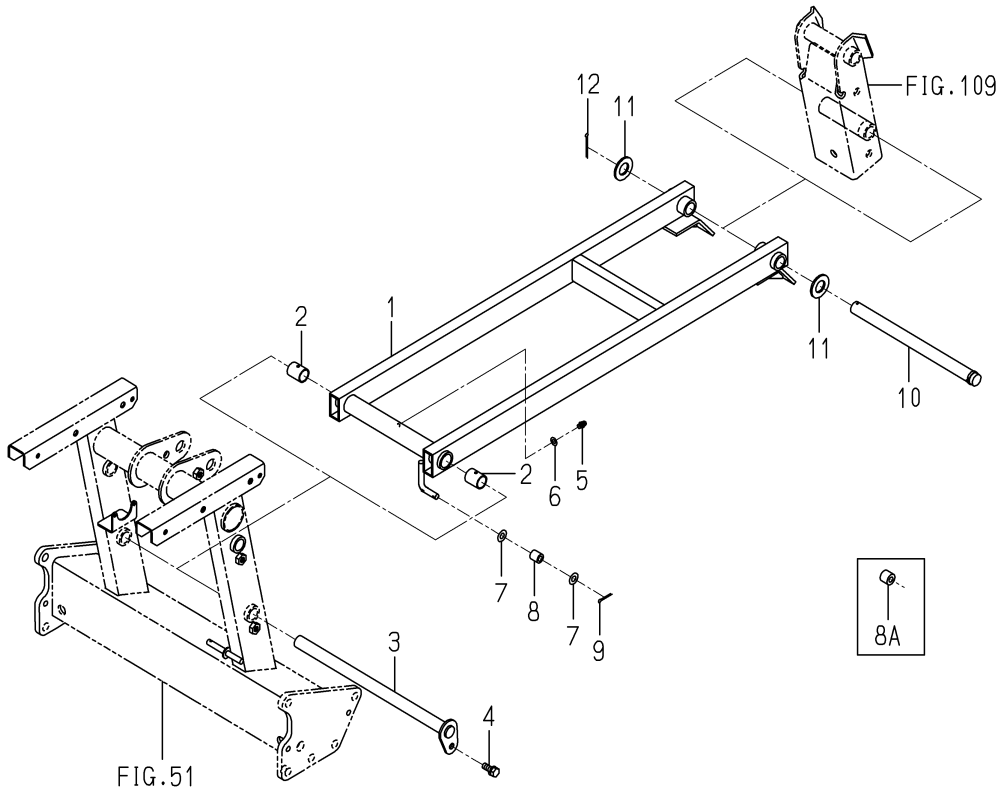

2232-414 -0100

KEY	PART CODE	DESCRIPTION	SPC	TYPE OF MODEL NP60E16		ITC	COL	GRP	REMARKS
1	2232-414-200-20	LINK/LOWER COMP	*	1					
2	P112-711-201-00	BUSH/18X21X25	*	2					
3	2232-414-210-00	PIN/18X315 COMP	*	1					
4	V211-260-802-00	BOLT,S/M8X20	*	1					
5	V760-150-000-00	NIPPLE,GREASE	*	1					
6	V411-260-006-00	WASHER,PL/M6	*	1					
7	V411-260-008-00	WASHER,PL/M8	*	2					
8	2186-533-002-00	ROLLER	*	1 -1214					
8A	2232-581-005-00	ROLLER/08X14X17	*	1 1215-					
9	V500-163-002-00	PIN,SPLIT/3X20	*	1					
10	2232-415-001-00	PIN/18X247	*	1					
11	V411-260-018-00	WASHER,PL/M18	*	2					
12	V500-163-003-50	PIN,SPLIT/3X35	*	1					

FIG. 71 LINK(LOWER)SYSTEM(D TYPE)

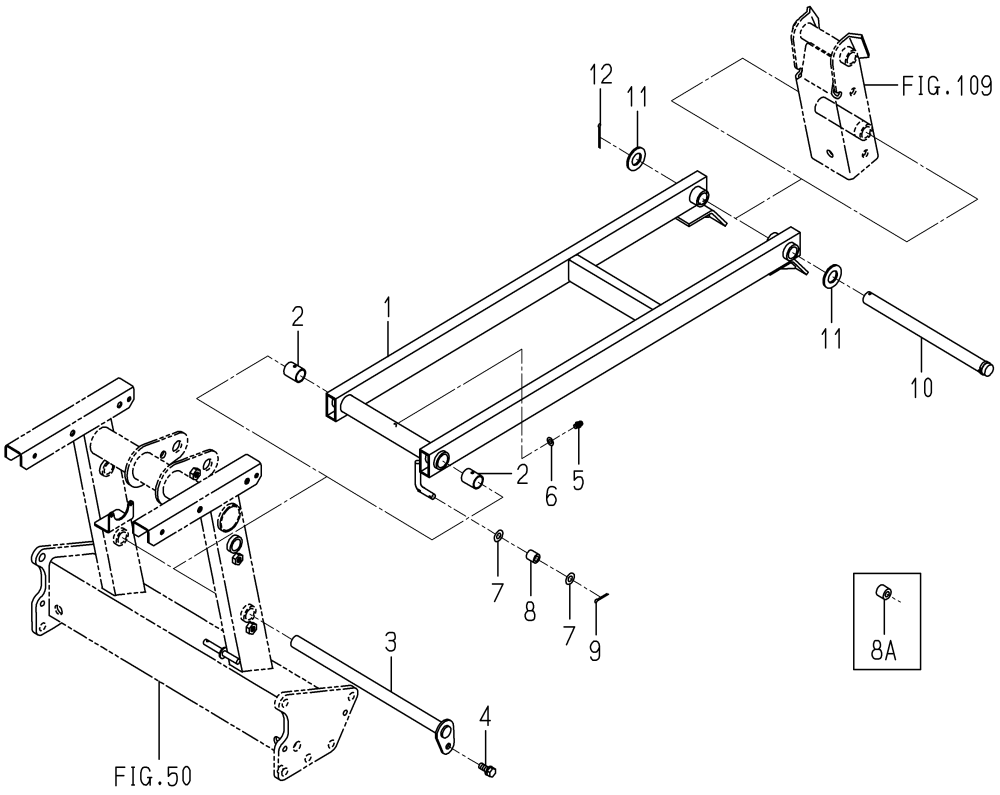

2232-414D-0100

KEY	PART CODE	DESCRIPTION	SPC	TYPE OF MODEL NP60E16		ITC	COL	GRP	REMARKS
1	2232-414-300-00	LINK/LOWER/6D COMP	*	1					
2	P112-711-201-00	BUSH/18X21X25	*	2					
3	2232-414-210-00	PIN/18X315 COMP	*	1					
4	V211-260-802-00	BOLT,S/M8X20	*	1					
5	V760-150-000-00	NIPPLE,GREASE	*	1					
6	V411-260-006-00	WASHER,PL/M6	*	1					
7	V411-260-008-00	WASHER,PL/M8	*	2					
8	2186-533-002-00	ROLLER	*	1 -1214					
8A	2232-581-005-00	ROLLER/08X14X17	*	1 1215-					
9	V500-163-002-00	PIN,SPLIT/3X20	*	1					
10	2232-415-001-00	PIN/18X247	*	1					
11	V411-260-018-00	WASHER,PL/M18	*	2					
12	V500-163-003-50	PIN,SPLIT/3X35	*	1					

FIG. 72 LINK(UPPER)SYSTEM(G TYPE)

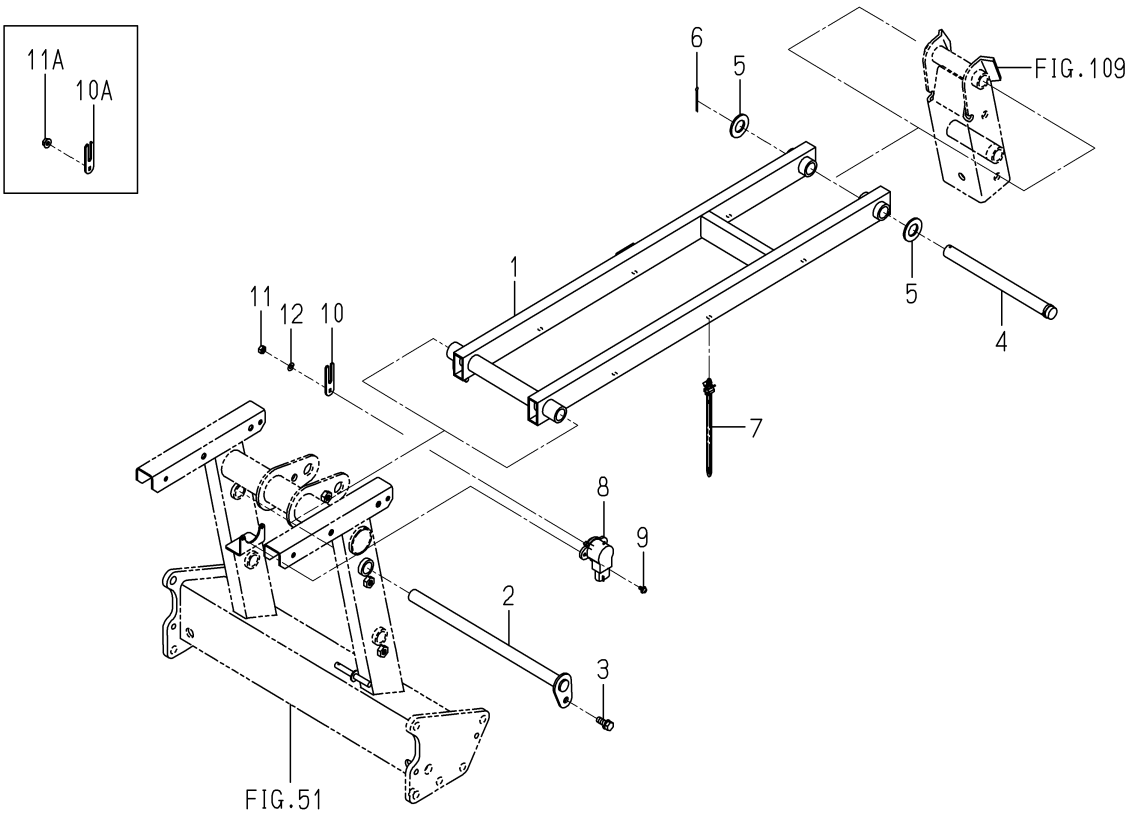

2232-415 -0100

KEY	PART CODE	DESCRIPTION	SPC	TYPE OF MODEL NP60E16		ITC	COL	GRP	REMARKS
1	2232-415-200-00	LINK/UPPER COMP	*	1					
2	2232-414-210-00	PIN/18X315 COMP	*	1					
3	V211-260-802-00	BOLT,S/M8X20	*	1					
4	2232-415-002-00	PIN/18X211	*	1					
5	V411-260-018-00	WASHER,PL/M18	*	2					
6	V500-163-003-50	PIN,SPLIT/3X35	*	1					
7	2204-537-002-00	BAND	*	6					
8	1729-662-340-00	SENSOR/ANGLE/110/R	*	1					
9	V120-364-001-00	SCREW,SP/M4X10	*	2					
10	2232-415-003-10	SENSORARM/LINK	*	1 -60					
10A	2232-415-003-20	SENSORARM/LINK	*	1 61-		1			
11	V301-260-006-00	NUT/M6	*	1 -60					
11A	V360-260-006-00	NUT/WASHER/M6	*	1 61-					
12	V401-160-006-00	WASHER,SP/M6	*	1 -60					

FIG. 73 LINK(UPPER)SYSTEM(D TYPE)

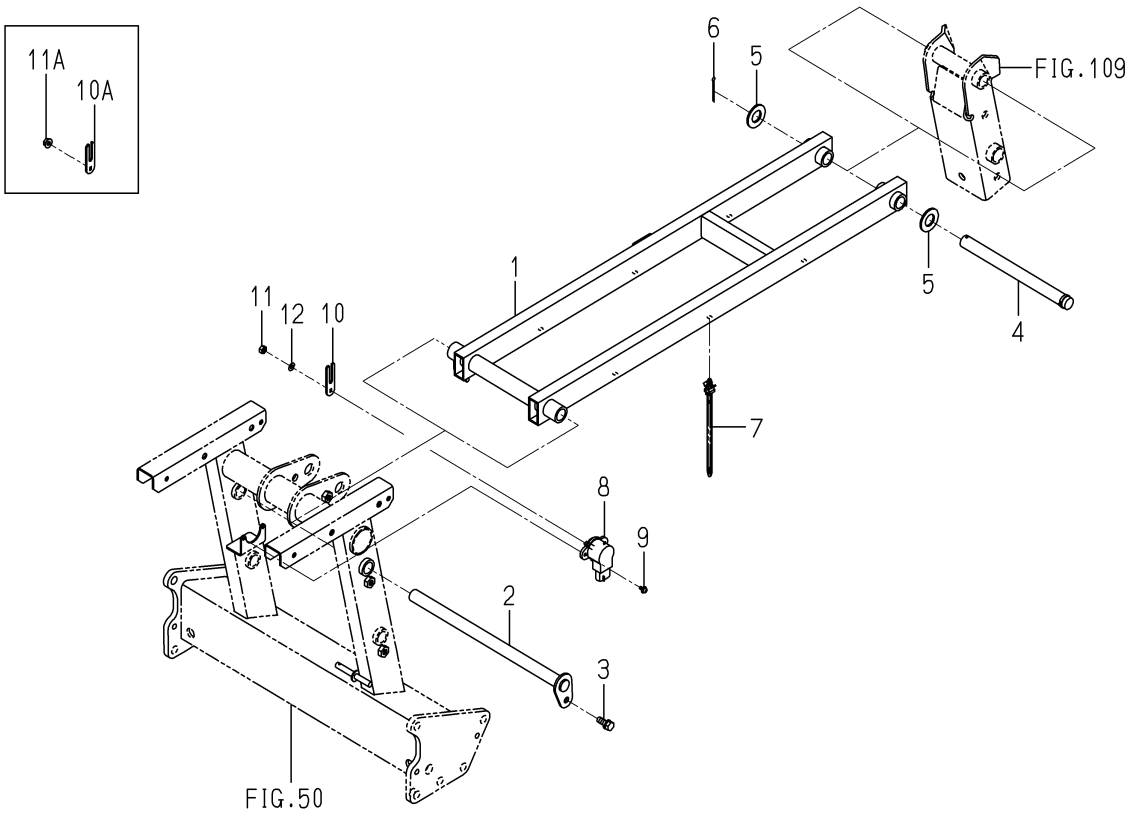

2232-415D-0100

KEY	PART CODE	DESCRIPTION	SPC	TYPE OF MODEL NP60E16		ITC	COL	GRP	REMARKS
1	2232-415-300-00	LINK/UPPER/6D COMP	*	1					
2	2232-414-210-00	PIN/18X315 COMP	*	1					
3	V211-260-802-00	BOLT,S/M8X20	*	1					
4	2232-415-002-00	PIN/18X211	*	1					
5	V411-260-018-00	WASHER,PL/M18	*	2					
6	V500-163-003-50	PIN,SPLIT/3X35	*	1					
7	2204-537-002-00	BAND	*	6					
8	1729-662-340-00	SENSOR/ANGLE/110/R	*	1					
9	V120-364-001-00	SCREW,SP/M4X10	*	2					
10	2232-415-003-10	SENSORARM/LINK	*	1 -60					
10A	2232-415-003-20	SENSORARM/LINK	*	1 61-		1			
11	V301-260-006-00	NUT/M6	*	1 -60					
11A	V360-260-006-00	NUT/WASHER/M6	*	1 61-					
12	V401-160-006-00	WASHER,SP/M6	*	1 -60					

FIG. 74 CLUTCH(PLANTING)SYSTEM

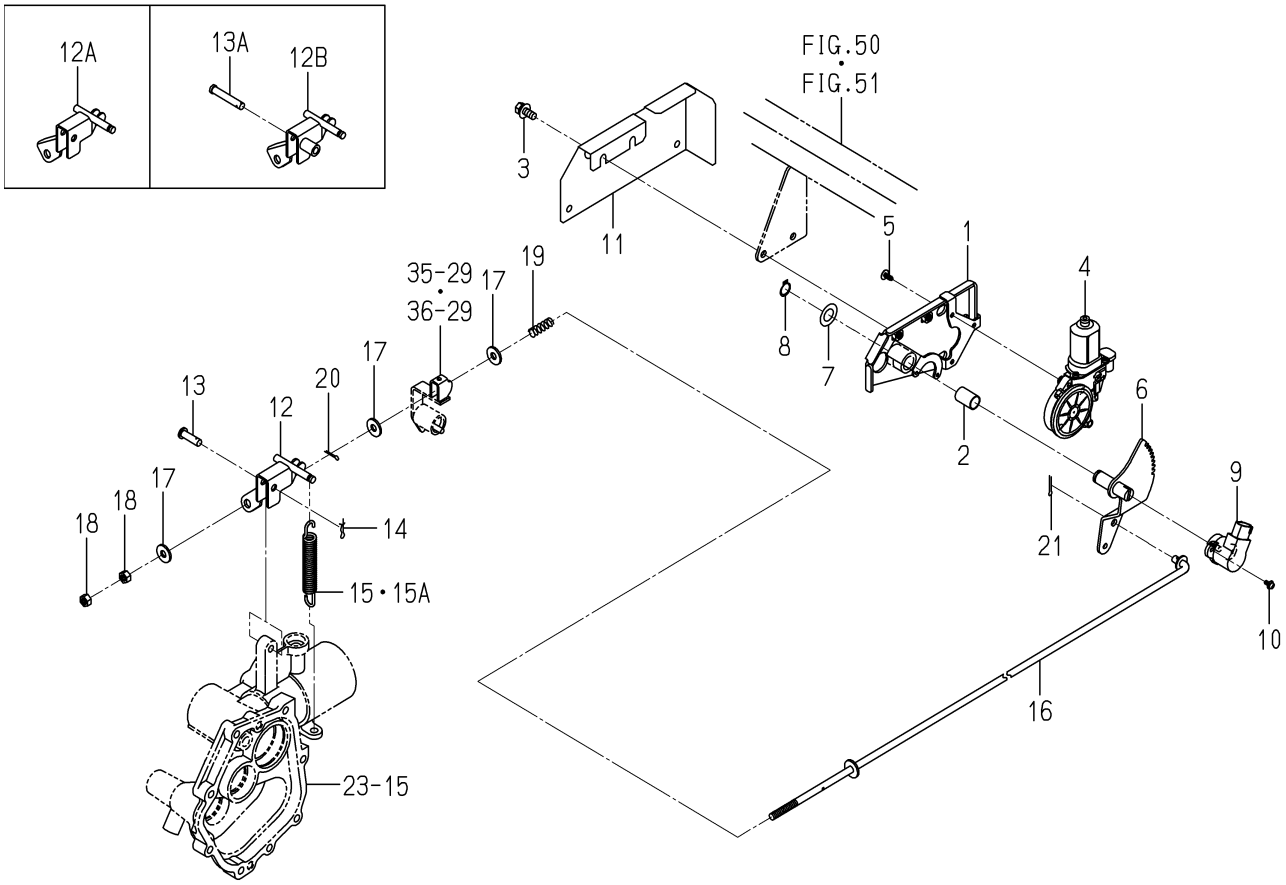

2232-422 -0100

KEY	PART CODE	DESCRIPTION	SPC	TYPE OF MODEL NP60E16		ITC	COL	GRP	REMARKS
1	2232-422-200-10	BASE/MOTOR/PLANTING	*	1					
2	2232-583-005-00	BUSH/15X17X25	*	1					
3	V211-360-802-00	BOLT,SP/M8X20	*	2					
4	3888-726-200-00	MOTOR/LH ASSY	*	1					
5	3888-726-001-00	TAPPINGSCREW/M5X12	*	3					
6	2232-422-210-00	GEAR/CLUTCH/PLANTING	*	1					
7	3747-342-002-00	WASHER	*	1					
8	V704-140-015-00	RING,SNAP/15 C	*	1					
9	1729-662-330-00	SENSOR/ANGLE/75 ASSY	*	1					
10	V120-364-001-00	SCREW,SP/M4X10	*	2					
11	2232-422-001-20	COVER/MOTOR/PLANTING	*	1		1			
12	2232-422-230-10	ARM/CLUTCH/PLANTING	*	1 -60					
12A	2232-422-230-20	ARM/CLUTCH/PLANTING	*	1 -632		1			
12B	2232-422-230-30	ARM/CLUTCH/PLANTING	*	1 633-		3			
13	2186-336-003-00	PIN/08X27	*	1 -632					
13A	2232-422-024-00	PIN/08X47	*	1 633-					
14	2161-735-006-00	PIN/STOPPER/8	*	1					
15	2232-422-031-00	SPRING/HE114	*	1 -60					
15A	2232-422-031-10	SPRING/HE114	*	1 61-		1			
16	2232-422-270-10	ROD/PLANTING CLUTCH/	*	1					
17	4106-102-028-00	WASHER	*	3					
18	V304-260-008-00	NUT/M8	*	2					
19	2232-422-002-00	SPRING/HC032	*	1					
20	V500-163-001-50	PIN,SPLIT/3X15	*	1					
21	V500-163-002-00	PIN,SPLIT/3X20	*	1					

FIG. 75 VALVE SYSTEM

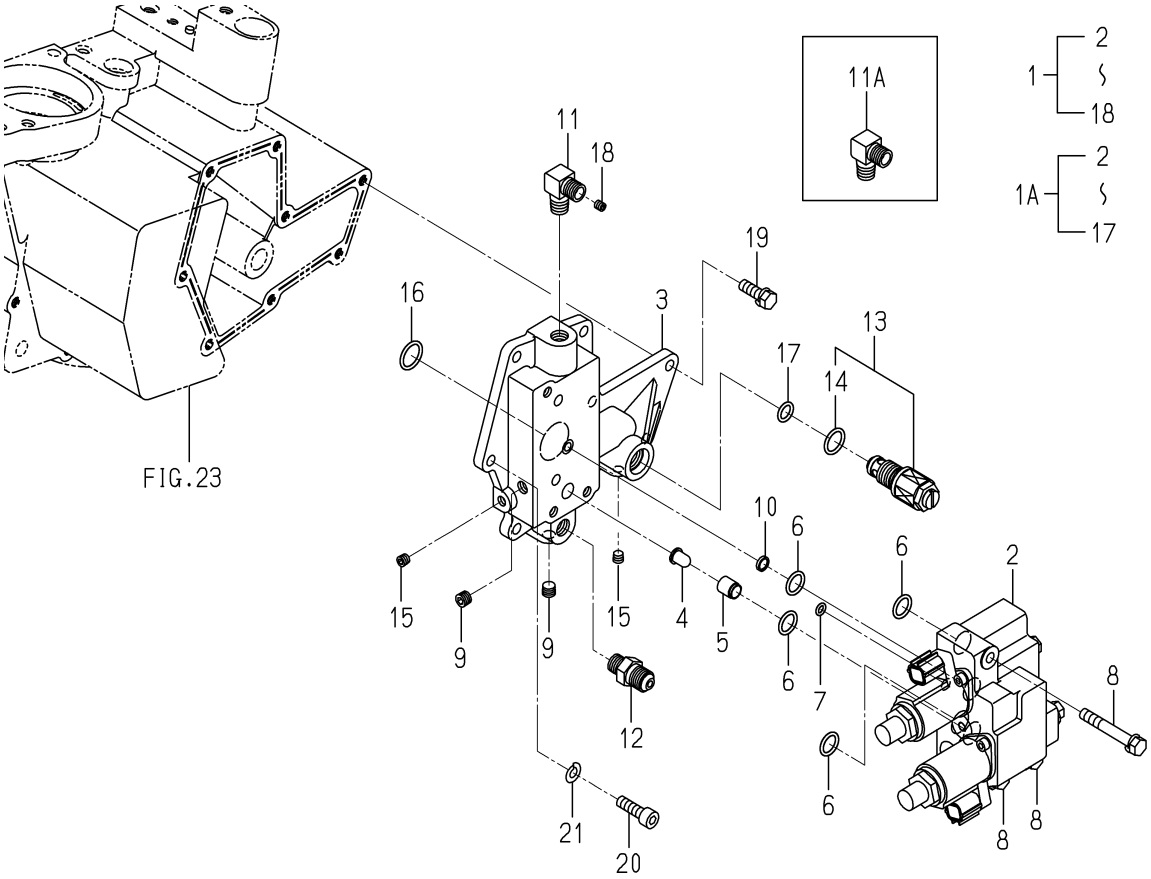

2233-435 -0100

KEY	PART CODE	DESCRIPTION	SPC	TYPE OF MODEL NP60E16		ITC	COL	GRP	REMARKS
1	2233-435-200-00	VALVE/KTMS6/8 SET	*	1 -60					
1A	2233-435-200-10	VALVE/KTMS6/8 SET	*	1 61-		3			
2	K200-269-000-00	VALVE/PFV/15ASSY	*	1					
3	2232-435-001-00	METAL/RELIEF/KTMS6	*	1					
4	1675-503-001-00	FILTER/LINE/09X12X15	*	1					
5	2232-435-003-00	COLLAR/10X12X14	*	1					
6	V720-112-401-40	O-RING/1B,P14	*	4					
7	V720-111-900-60	O-RING/1B,P6	*	1					
8	V211-260-805-50	BOLT,S/M8X55	*	3					
9	V780-140-000-2T	PLUG/SCREW/SEAL	*	2					
10	1757-509-012-00	FILTER/PORT/11	*	1					
11	2232-435-004-00	ADAPTER/L/ORIFICE	*	1 -60					
11A	3768-185-022-10	ADAPTER/90DEG/PUMP	*	1 61-					
12	3768-185-014-10	ADAPTER,STRAIGHT	*	1					
13	K250-083-000-00	VALVE/RELIEF/08 ASSY	*	1					
14	V720-112-401-60	O-RING/1B,P16	*	1					
15	V780-140-000-1T	PLUG/SCREW/SEAL	*	2					
16	V720-112-401-80	O-RING/1B,P18	*	1					
17	V720-112-401-10	O-RING/1B,P11	*	1					
18	V783-160-602-00	ORIFICESETS/M6X2.0	*	1 -60					
19	V211-260-802-50	BOLT,S/M8X25	*	7					
20	V220-540-802-50	SCREW,SOCKET/M8X25	*	1					
21	V401-160-008-00	WASHER,SP/M8	*	1					

FIG. 76 CONTROLLER(STEERING)SYSTEM (EXCEPT R TYPE)(NO.1-630)

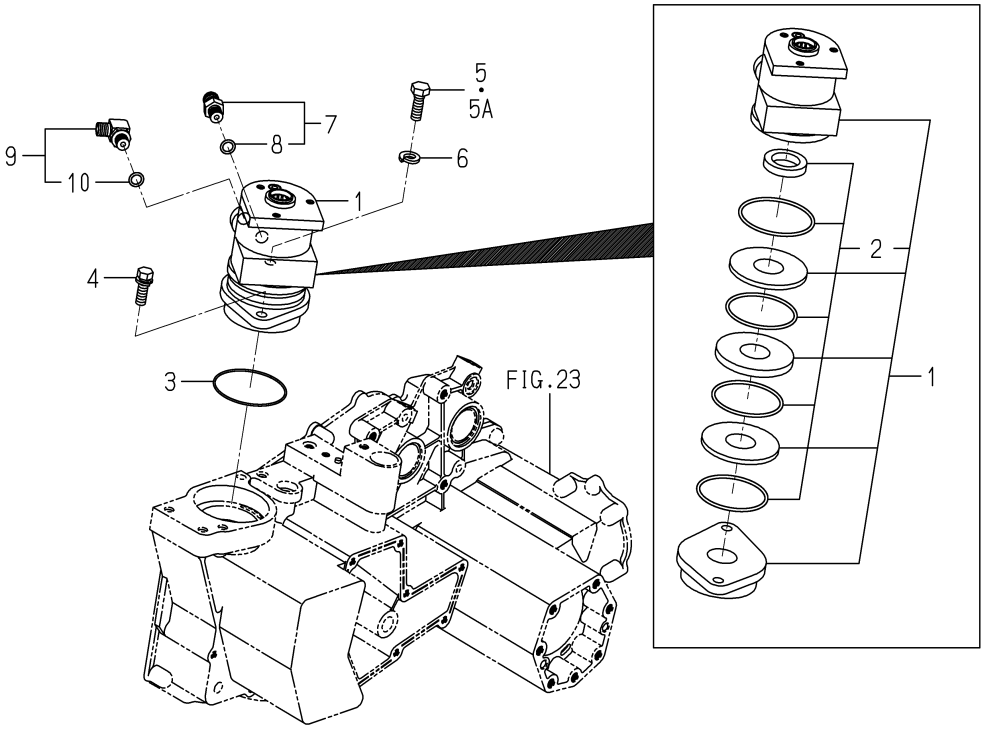

2233-440 -0100

KEY	PART CODE	DESCRIPTION	SPC	TYPE OF MODEL NP60E16		ITC	COL	GRP	REMARKS
1	2204-440-300-10	TORQUEGENERATOR	*	1 -630					
2	2204-440-310-00	KIT/SEAL ASSY	*	1 -630					
3	2194-301-009-00	O-RING	*	1 -630					
4	2204-323-011-00	BOLT/SEAL/M10X30/S	*	1 -630					
5	2204-440-001-20	BOLT/M10X30	*	1 -60					
5A	2204-440-001-30	BOLT/REAMER/M10X30	*	1 -630		1			
6	V401-160-012-00	WASHER,SP/M12	*	1 -630					
7	1650-509-280-00	ADAPTER/PF1/4 ASSY	*	1 -630					
8	V720-112-401-10	O-RING/1B,P11	*	1 -630					
9	1705-408-230-00	ADAPTER/L/G1/4 ASSY	*	1 -630					
10	V720-112-401-10	O-RING/1B,P11	*	1 -630					

FIG. 77 CONTROLLER(STEERING)SYSTEM (EXCEPT R TYPE-NO.631-)

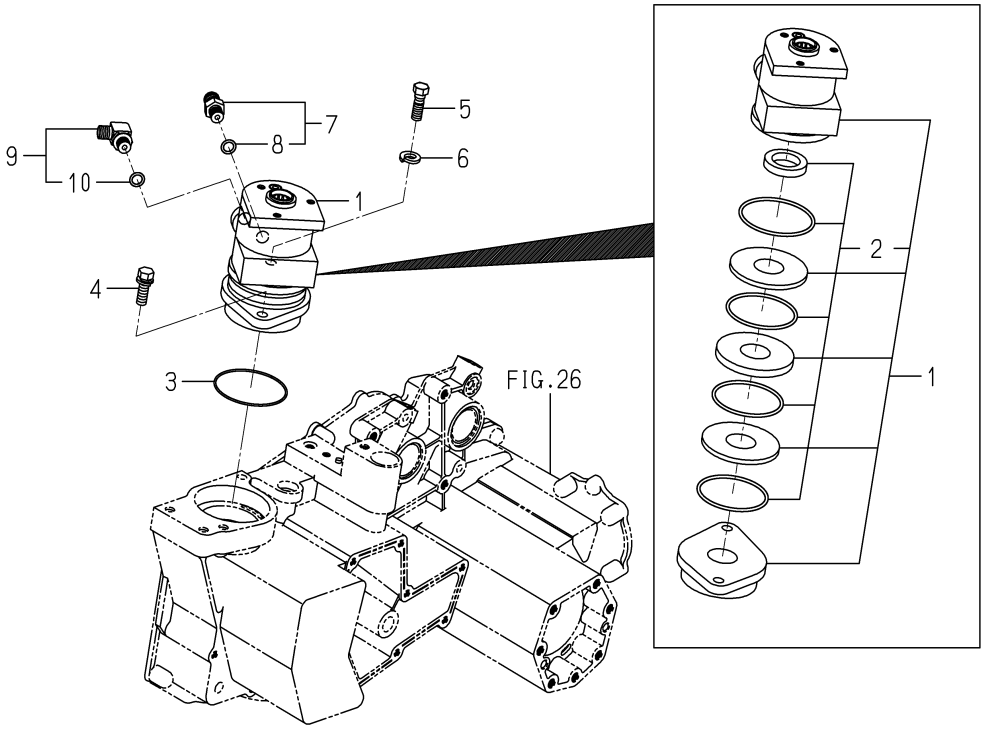

2232-440A-0100

KEY	PART CODE	DESCRIPTION	SPC	TYPE OF MODEL NP60E16		ITC	COL	GRP	REMARKS
1	2204-440-300-10	TORQUEGENERATOR	*	1 631-					
2	2204-440-310-00	KIT/SEAL ASSY	*	1 631-					
3	2194-301-009-00	O-RING	*	1 631-					
4	2204-323-011-00	BOLT/SEAL/M10X30/S	*	1 631-					
5	2204-440-001-30	BOLT/REAMER/M10X30	*	1 631-					
6	V401-160-012-00	WASHER,SP/M12	*	1 631-					
7	1650-509-280-00	ADAPTER/PF1/4 ASSY	*	1 631-					
8	V720-112-401-10	O-RING/1B,P11	*	1 631-					
9	1705-408-230-00	ADAPTER/L/G1/4 ASSY	*	1 631-					
10	V720-112-401-10	O-RING/1B,P11	*	1 631-					

FIG. 78 HOOD SYSTEM

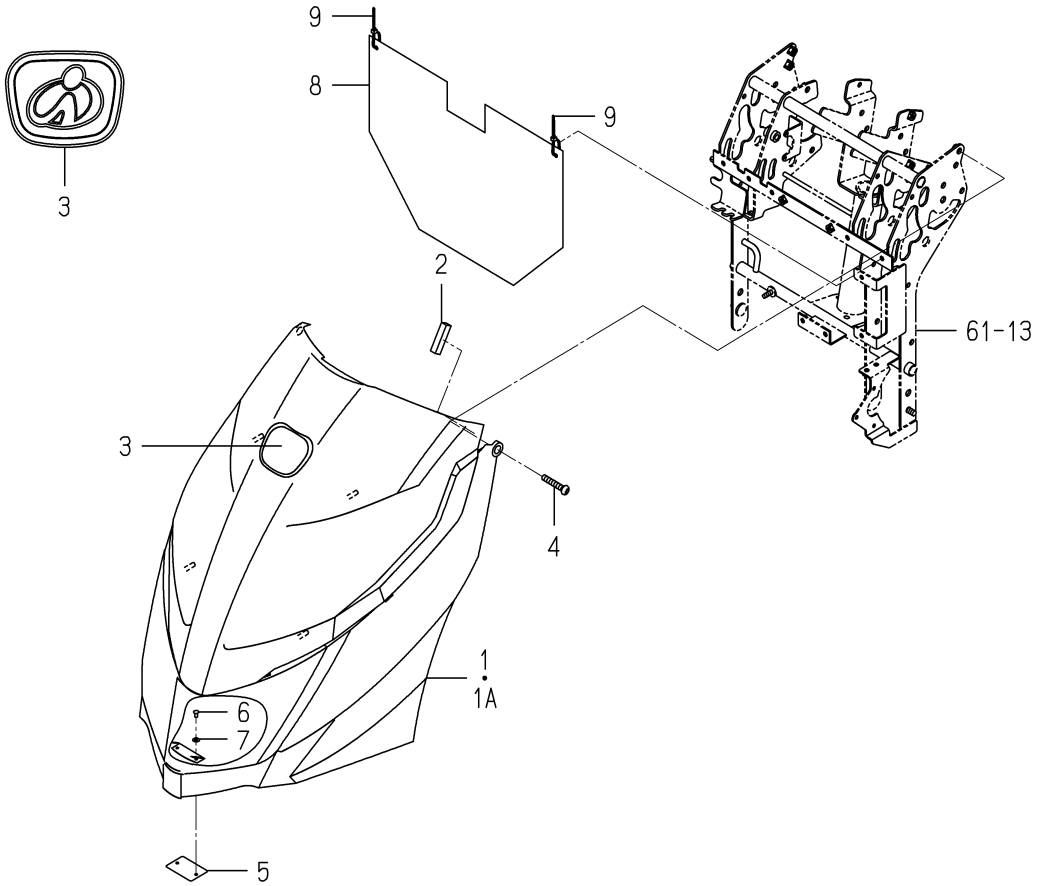

2232-501 -0100

KEY	PART CODE	DESCRIPTION	SPC	TYPE OF MODEL NP60E16		ITC	COL	GRP	REMARKS
1	2232-501-200-40	HOOD/NP ASSY	*	1 -60					
1A	2232-501-200-50	HOOD/NP ASSY	*	1 61-		1			
2	2232-501-032-00	CUSHION/HOOD	*	2					
3	3533-901-012-00	ORNAMENT/ISEKI	*	1					
4	2232-501-003-00	SCREW/TRUSS/M8X40	*	2					
5	2232-501-004-10	PLATE/MAGNET/NP	*	1					
6	W296-134-008-60	RIVET,BLIND/4X8.6	*	2					
7	V411-260-004-00	WASHER,PL/M4	*	2					
8	2233-501-063-10	COVER/CONTROLLER/Z	*	1 1639-					
9	2132-545-008-00	WIRE BAND(92)	*	2 1639-					

FIG. 79 HOOD(REAR)SYSTEM

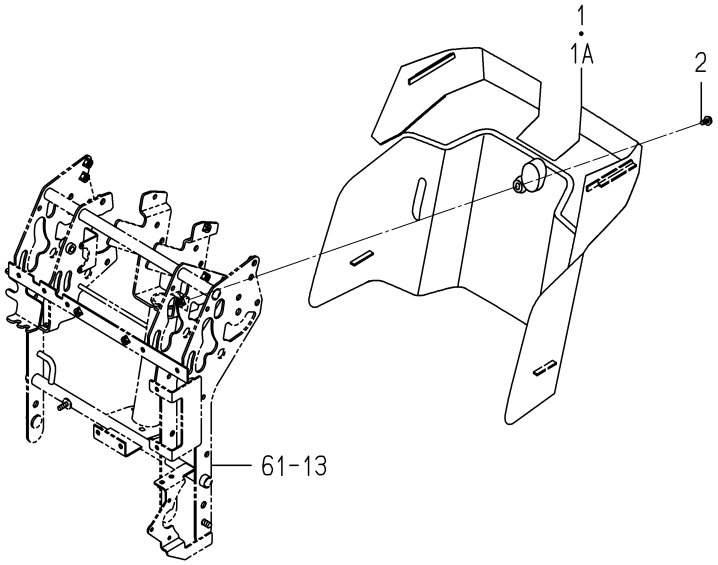

2232-507 -0100

KEY	PART CODE	DESCRIPTION	SPC	TYPE OF MODEL NP60E16		ITC	COL	GRP	REMARKS
1	2232-507-001-00	HOOD/REAR/NP	*	1 -1637					
1A	2232-507-001-10	HOOD/REAR/NP	*	1 1638-		1			
2	V120-366-001-60	SCREW,SP/M6X16	*	1					

FIG. 80 STEP(MAIN)SYSTEM(G TYPE)

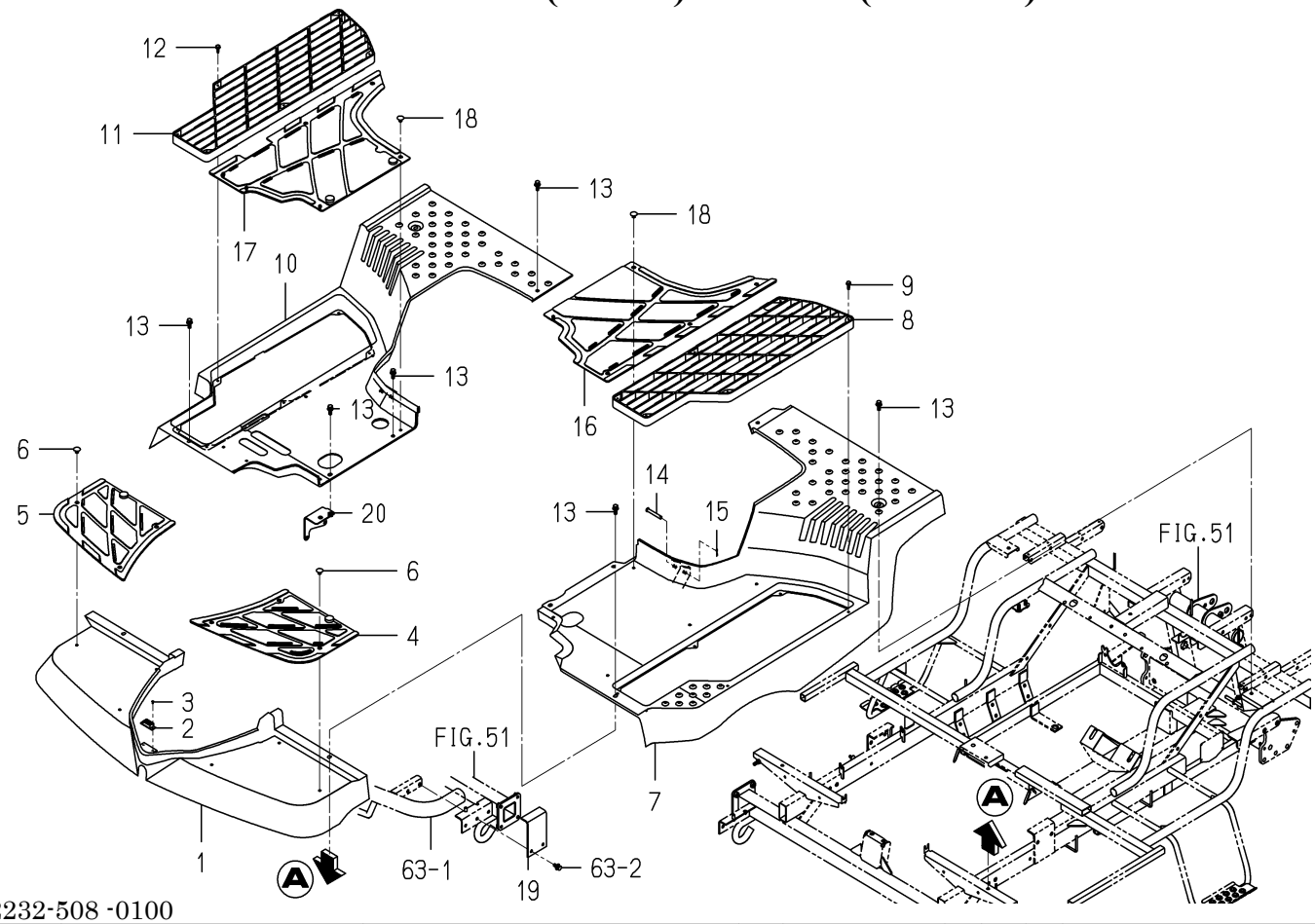

2232-508 -0100

KEY	PART CODE	DESCRIPTION	SPC	TYPE OF MODEL NP60E16		ITC	COL	GRP	REMARKS
1	2232-508-001-10	STEP/FRONT/NP	*	1					
2	2204-501-005-00	HOOD/MAGNET	*	1					
3	3885-741-235-00	RIVET/BLIND/STEEL/3.	*	2					
4	2232-508-011-00	MAT/FRONT/LH/NP	*	1					
5	2232-508-012-00	MAT/FRONT/RH/NP	*	1					
6	2186-508-009-00	CLIP,STEP MAT	*	6					
7	2232-508-006-20	STEP/CENTER/LH/NP	*	1					
8	2232-508-003-00	STEP/SEETHROUGH/NP	*	1					
9	2213-508-004-00	TAPBOLT/6X20	*	6					
10	2232-508-007-20	STEP/CENTER/RH/NP	*	1					
11	2232-508-003-00	STEP/SEETHROUGH/NP	*	1					
12	2213-508-004-00	TAPBOLT/6X20	*	6					
13	2204-508-052-00	BOLT/SP/M8X25/SUS FA	*	7					
14	1329-106-002-00	PIN,STAND	*	2					
15	3908-170-020-00	PIN/SNAP/08	*	2					
16	2232-508-013-00	MAT/CENTER/LH/NP	*	1					
17	2232-508-014-00	MAT/CENTER/RH/NP	*	1					
18	2186-508-009-00	CLIP,STEP MAT	*	7					
19	2232-508-021-00	PLATE/STAY/STEP/FRON	*	2					
20	2232-508-280-00	PLATE/STEP/CENTER	*	1					

FIG. 81 STEP(MAIN)SYSTEM(D TYPE)

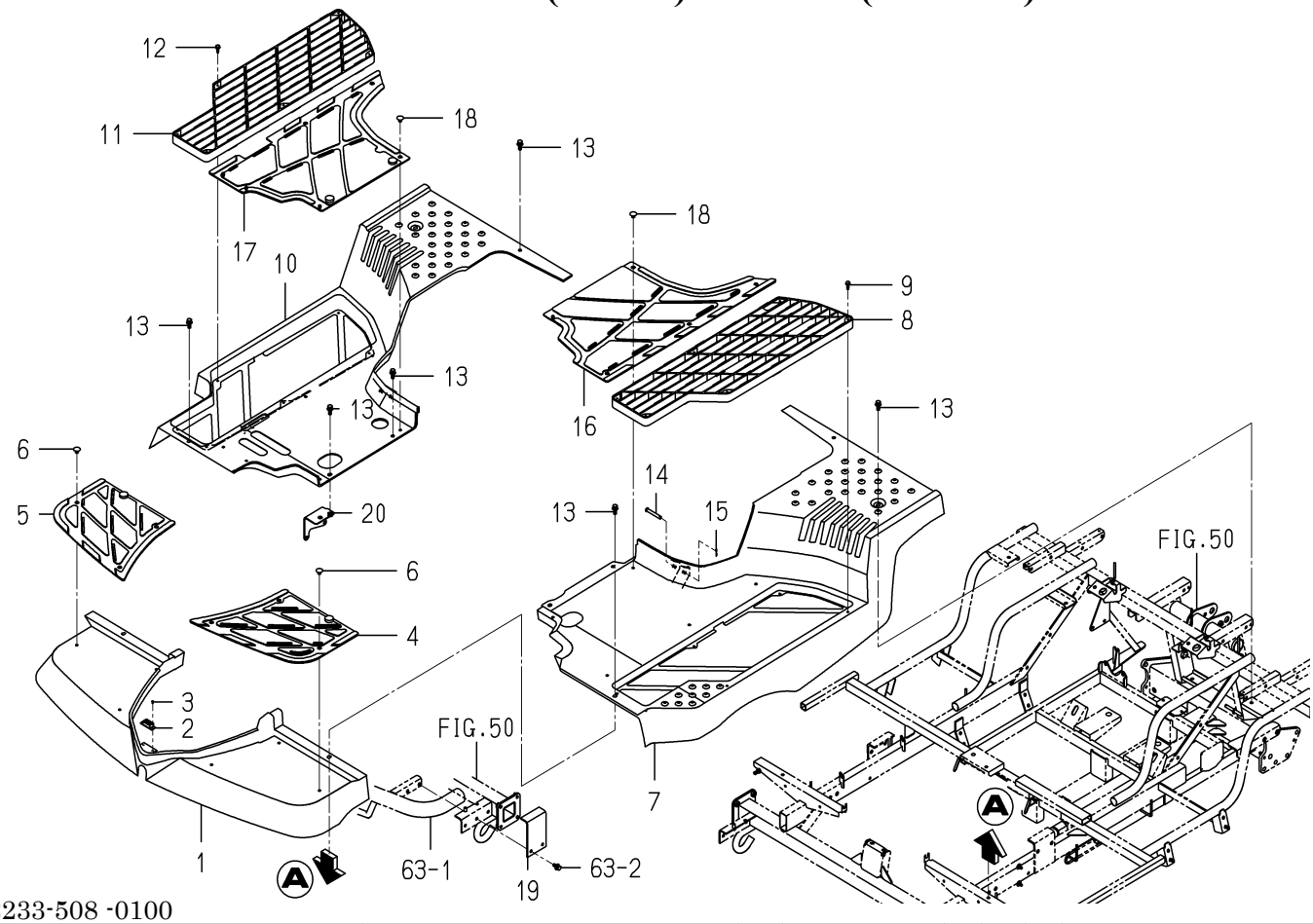

2233-508 -0100

KEY	PART CODE	DESCRIPTION	SPC	TYPE OF MODEL NP60E16		ITC	COL	GRP	REMARKS
1	2232-508-001-10	STEP/FRONT/NP	*	1					
2	2204-501-005-00	HOOD/MAGNET	*	1					
3	3885-741-235-00	RIVET/BLIND/STEEL/3.	*	2					
4	2232-508-011-00	MAT/FRONT/LH/NP	*	1					
5	2232-508-012-00	MAT/FRONT/RH/NP	*	1					
6	2186-508-009-00	CLIP,STEP MAT	*	6					
7	2233-508-001-00	STEP/CENTER/LH/D/NP	*	1					
8	2232-508-003-00	STEP/SEETHROUGH/NP	*	1					
9	2213-508-004-00	TAPBOLT/6X20	*	6					
10	2233-508-002-00	STEP/CENTER/RH/D/NP	*	1					
11	2232-508-003-00	STEP/SEETHROUGH/NP	*	1					
12	2213-508-004-00	TAPBOLT/6X20	*	6					
13	2204-508-052-00	BOLT/SP/M8X25/SUS FA	*	8					
14	1329-106-002-00	PIN,STAND	*	2					
15	3908-170-020-00	PIN/SNAP/08	*	2					
16	2232-508-013-00	MAT/CENTER/LH/NP	*	1					
17	2232-508-014-00	MAT/CENTER/RH/NP	*	1					
18	2186-508-009-00	CLIP,STEP MAT	*	7					
19	2232-508-021-00	PLATE/STAY/STEP/FRON	*	2					
20	2232-508-280-00	PLATE/STEP/CENTER	*	1					

FIG. 82 STEP(SIDE)SYSTEM(D TYPE)

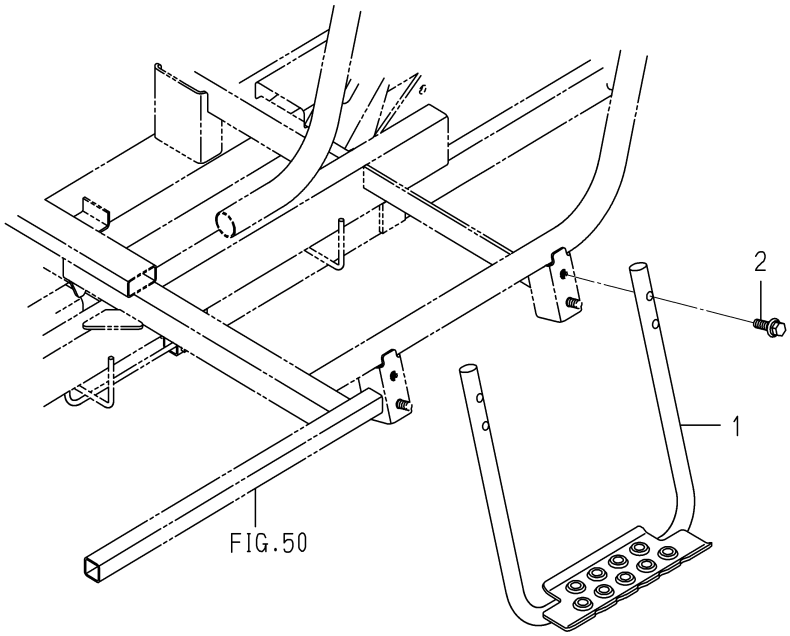

2233-509B-0100

KEY	PART CODE	DESCRIPTION	SPC	TYPE OF MODEL NP60E16		ITC	COL	GRP	REMARKS
1	2233-509-280-00	STEP/ASSIST/NP COMP	*	2			7F		
2	V211-360-803-00	BOLT,SP/M8X30	*	4					

FIG. 83 STEP(REAR)SYSTEM(EXCEPT F,DR TYPE) (D TYPE-NO.1-630)

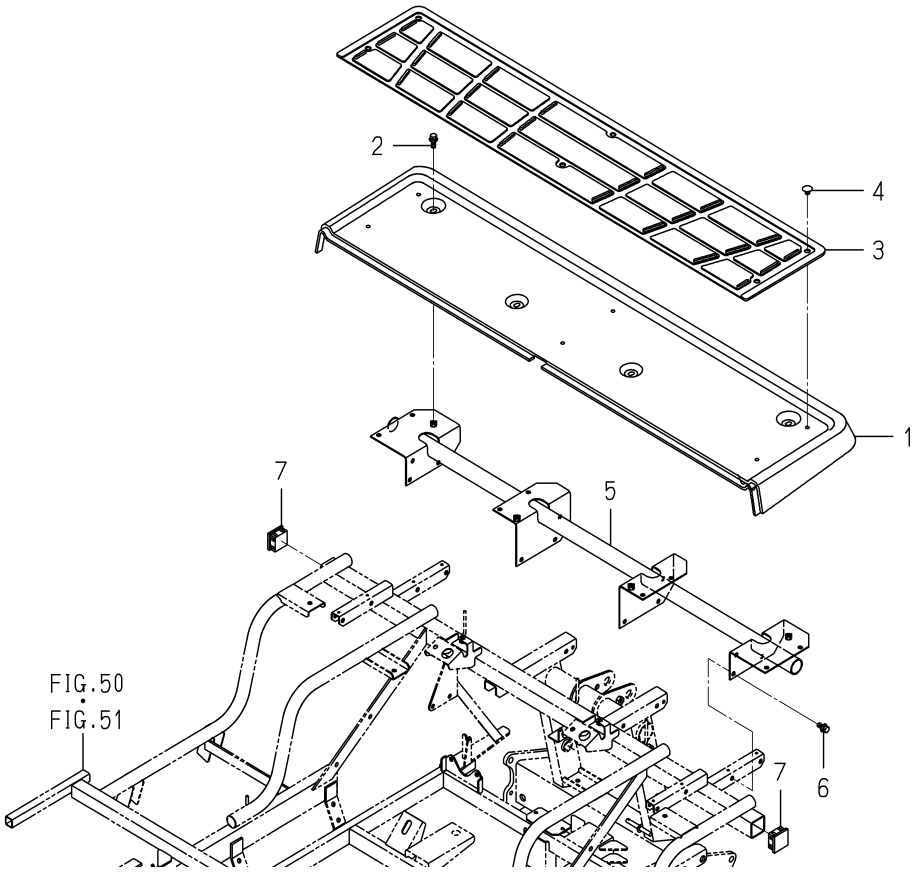

2232-510 -0100

KEY	PART CODE	DESCRIPTION	SPC	TYPE OF MODEL NP60E16		ITC	COL	GRP	REMARKS
1	2232-510-001-10	STEP/REAR/NP	*	1					
2	2204-508-052-00	BOLT/SP/M8X25/SUS FA	*	4					
3	2232-510-002-10	MAT/REAR/NP	*	1					
4	2186-508-009-00	CLIP,STEP MAT	*	6					
5	2232-510-200-00	FRAME/REAR/NP COMP	*	1					
6	V211-360-802-00	BOLT,SP/M8X20	*	8					
7	2232-510-005-00	CAP/40X40	*	2					

FIG. 84 STEP(REAR)SYSTEM(D TYPE EXCEPT F) (EXCEPT R TYPE-NO.631-)

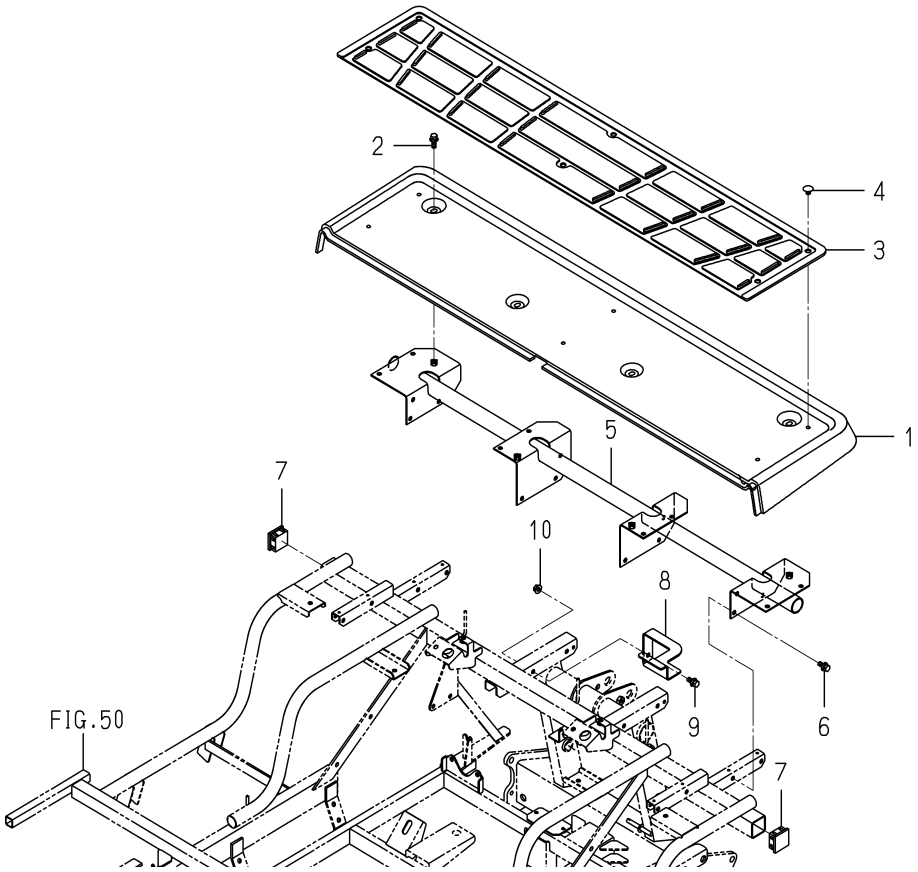

2232-510C-0100

KEY	PART CODE	DESCRIPTION	SPC	TYPE OF MODEL NP60E16		ITC	COL	GRP	REMARKS
1	2232-510-001-10	STEP/REAR/NP	*	1 631-					
2	2204-508-052-00	BOLT/SP/M8X25/SUS FA	*	4 631-					
3	2232-510-002-10	MAT/REAR/NP	*	1 631-					
4	2186-508-009-00	CLIP,STEP MAT	*	6 631-					
5	2232-510-200-00	FRAME/REAR/NP COMP	*	1 631-					
6	V211-360-802-00	BOLT,SP/M8X20	*	8 631-					
7	2232-510-005-00	CAP/40X40	*	2 631-					
8	2233-510-008-00	PLATE/SUPPORT/STEP	*	1 631-					
9	V211-360-802-00	BOLT,SP/M8X20	*	1 631-					
10	V362-260-008-00	NUT/WASHER/M8	*	1 631-					

FIG. 85 COVER(ENGINE)SYSTEM(G TYPE)

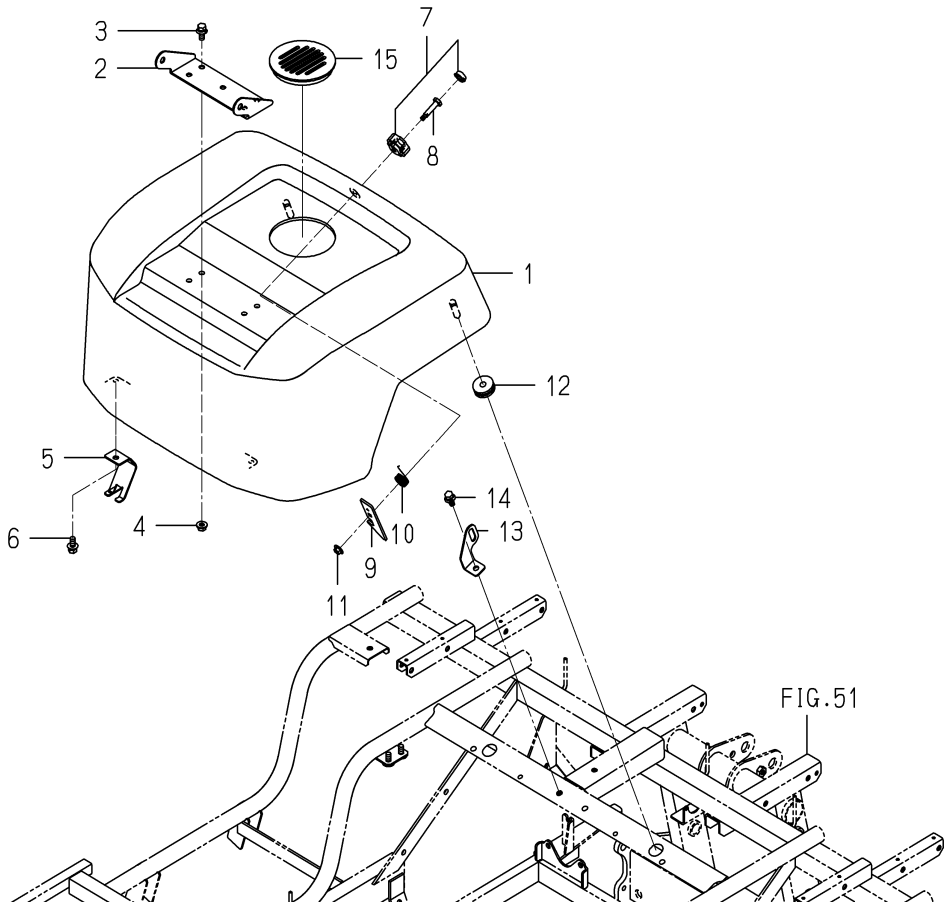

2232-512 -0100

KEY	PART CODE	DESCRIPTION	SPC	TYPE OF MODEL NP60E16		ITC	COL	GRP	REMARKS
1	2232-512-001-10	COVER/ENGINE/NP	*	1					
2	2213-512-003-10	BRACKET/SEAT/PZ/8	*	1					
3	V211-360-802-00	BOLT,SP/M8X20	*	4					
4	V362-260-008-00	NUT/WASHER/M8	*	4					
5	2204-512-003-10	STAY/HINGE/PZ	*	2					
6	V211-360-802-00	BOLT,SP/M8X20	*	2					
7	2194-508-220-10	KNOB SET	*	1					
8	2194-508-008-00	PIN	*	1					
9	2209-508-013-00	PLATE/COVER/ROCK/PQZ	*	1					
10	2194-508-009-00	SPRING/HT020	*	1					
11	V361-260-006-00	NUT,WASHER/M6	*	1					
12	3737-154-003-00	CUSHION,SEAT	*	2					
13	2232-512-006-00	PLATE/LOCK/COVER/ENG	*	1					
14	V211-360-802-00	BOLT,SP/M8X20	*	1					
15	2232-512-004-10	CAP/ENGINECOVER/620	*	1		1			

FIG. 86 COVER(ENGINE)SYSTEM(D TYPE)

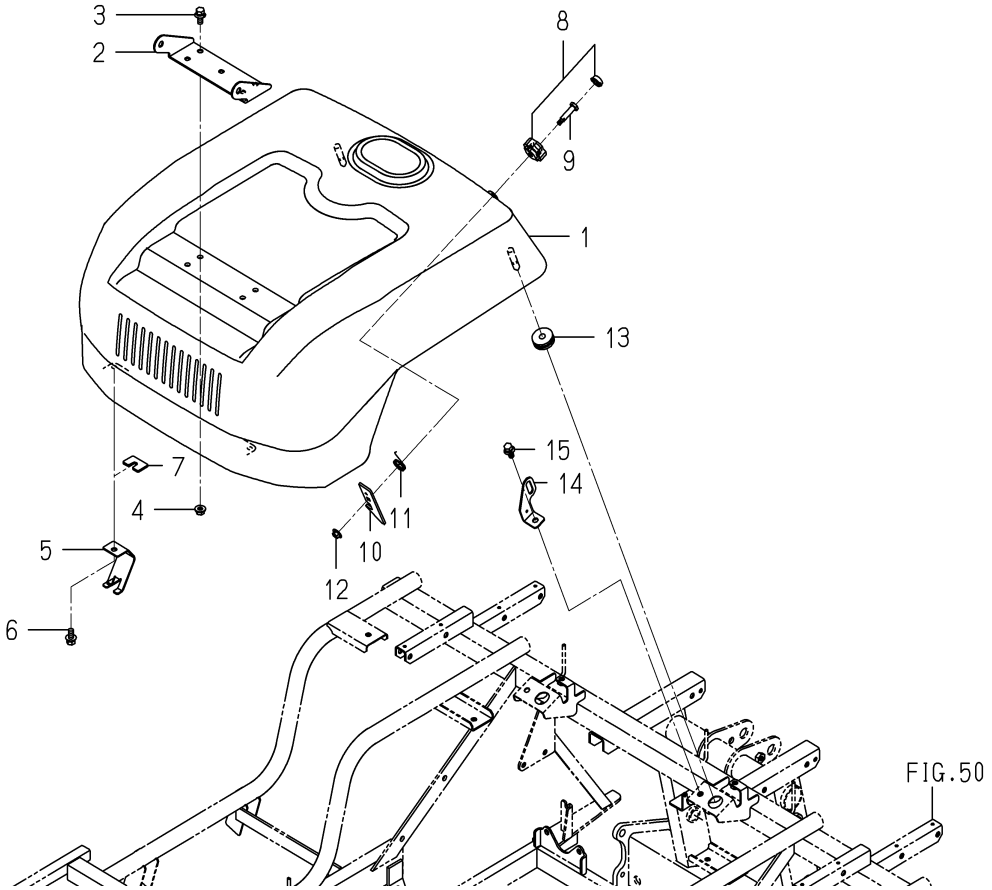

2233-512 -0100

KEY	PART CODE	DESCRIPTION	SPC	TYPE OF MODEL NP60E16		ITC	COL	GRP	REMARKS
1	2233-512-001-00	COVER/ENGINE/D/NP	*	1					
2	2213-512-003-10	BRACKET/SEAT/PZ/8	*	1					
3	V211-360-802-00	BOLT,SP/M8X20	*	4					
4	V362-260-008-00	NUT/WASHER/M8	*	4					
5	2204-512-003-10	STAY/HINGE/PZ	*	2					
6	V211-360-802-00	BOLT,SP/M8X20	*	2					
7	2233-512-005-00	PLATE/SPACER/COVER	*	2					
8	2194-508-220-10	KNOB SET	*	61-1					
9	2194-508-008-00	PIN	*	1					
10	2209-508-013-00	PLATE/COVER/ROCK/PQZ	*	1					
11	2233-512-004-00	SPRING/HT22	*	1					
12	V361-260-006-00	NUT,WASHER/M6	*	1					
13	3737-154-003-00	CUSHION,SEAT	*	2					
14	2233-512-002-00	PLATE/LOCK/COVER/ENG	*	1					
15	V211-360-802-00	BOLT,SP/M8X20	*	1					

FIG. 87 FRAME(SEEDLING/SUB)SYSTEM(RF TYPE)(1/2)

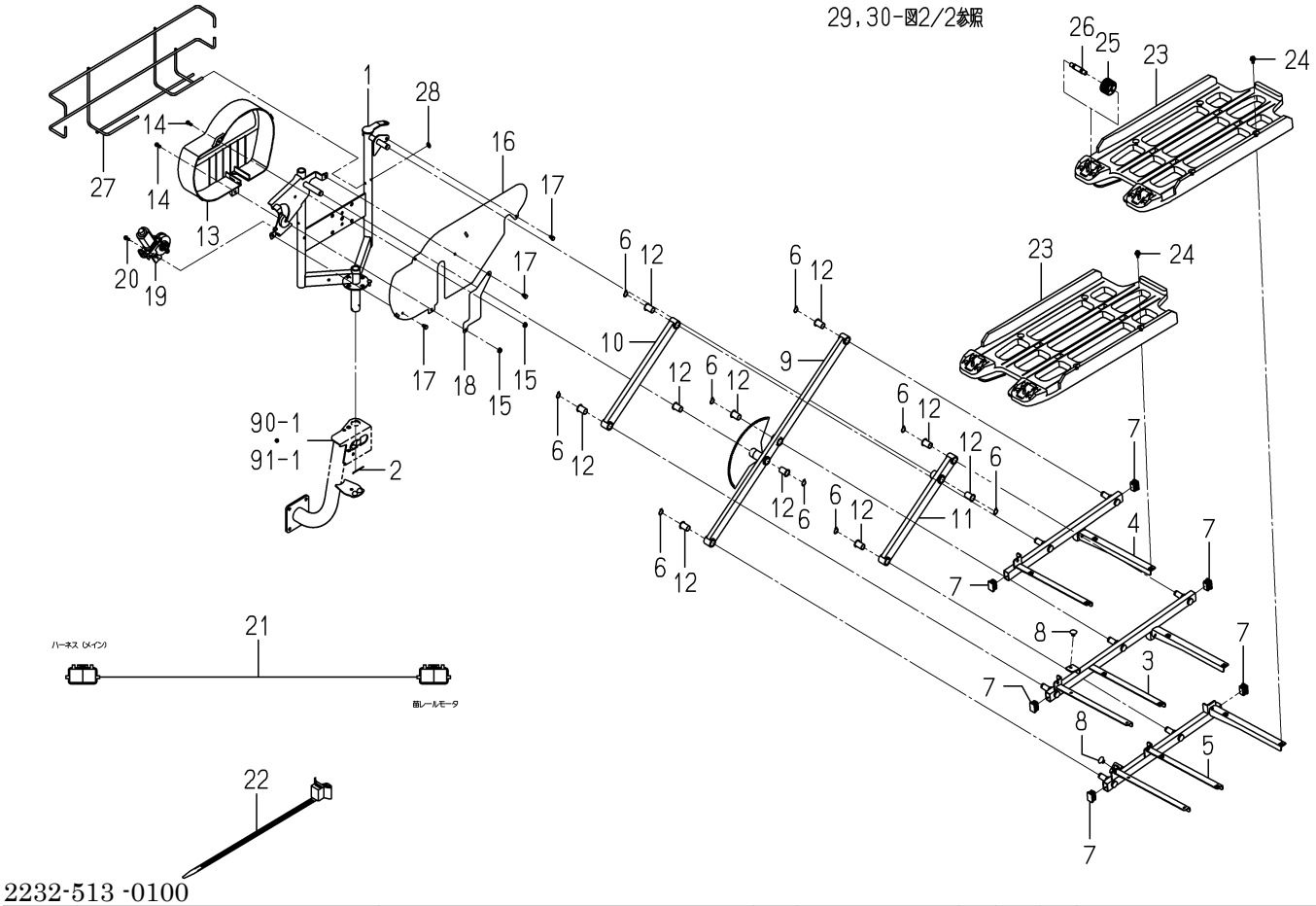

2232-513 -0100

KEY	PART CODE	DESCRIPTION	SPC	TYPE OF MODEL NP60E16		ITC	COL	GRP	REMARKS
1	2204-513-700-21	SEEDLING FRAME/BASE/	*	1			7F		
2	V500-163-004-00	PIN,SPLIT/3X40	*	1					
3	2204-513-720-21	SEEDLING FRAME/SLIDE	*	1			7F		
4	2204-513-730-21	SEEDLING FRAME/SLIDE	*	1			7F		
5	2204-513-740-21	SEEDLING FRAME/SLIDE	*	1			7F		
6	V704-140-015-00	RING,SNAP/15 C	*	9					
7	2204-513-026-00	CAP/30X20	*	6					
8	2186-508-009-00	CLIP,STEP MAT	*	2					
9	2204-513-760-11	ARM/SLIDER/MAIN COMP	*	1			7F		
10	2204-513-780-11	ARM/SLIDER/UPPE COMP	*	1			7F		
11	2204-513-790-11	ARM/SLIDER/LOWE COMP	*	1			7F		
12	1719-630-051-00	BUSH/15X17X25	*	10					
13	2232-513-008-00	COVER/MOTOR/NP	*	1					
14	V120-366-001-60	SCREW,SP/M6X16	*	2					
15	V360-260-006-00	NUT/WASHER/M6	*	2					
16	2204-513-025-01	PLATE/COVER/GEAR	*	1			7F		
17	V210-260-601-20	BOLT,S/M6X12	*	3					
18	2204-513-027-01	PLATE/COVER/GEAR/S	*	1			7F		
19	2194-543-200-00	MOTER	*	1					
20	V120-365-001-60	SCREW,SP/M5X16	*	3					
21	2204-530-200-00	HARNESS/SEEDLIN ASSY	*	1					
22	2204-513-028-00	BAND/CLAMP/PUSH	*	5					
23	2204-513-021-00	SEEDLINGFRAME/SLIDER	*	3					
24	2144-501-011-10	BOLT/M6X16X16	*	12					
25	2163-870-003-10	ROLLER44	*	4					
26	2163-870-035-20	PIN/ROLLER	*	4					
27	2204-513-630-10	HOOK/SEEDLING BOX/SL	*	1					
28	2163-526-006-00	NUT	*	1					
29	2232-513-200-00	SEEDLING FRAME/RH/NP	*	1			7F		
30	V704-140-028-00	RING,SNAP/28 C	*	1					

FIG. 87 FRAME(SEEDLING/SUB)SYSTEM(RF TYPE)(2/2)

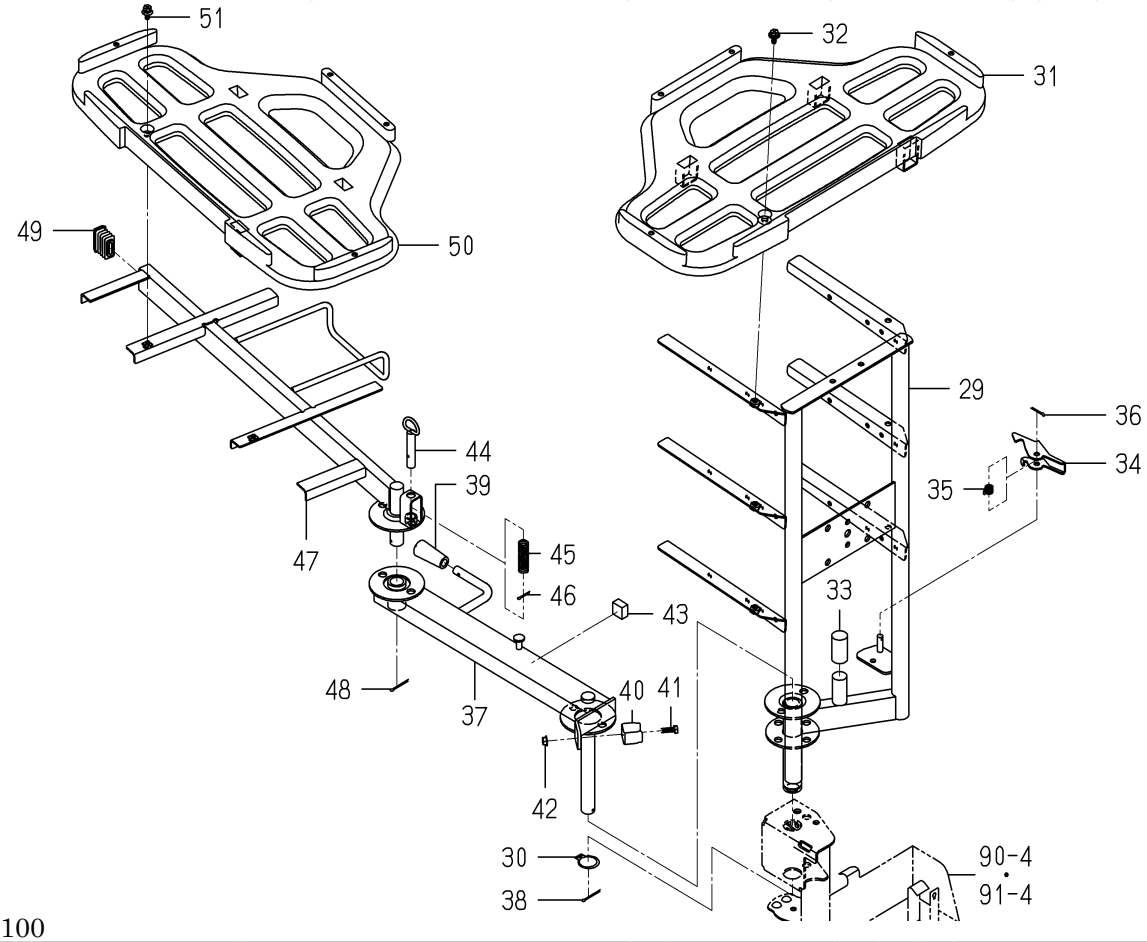

2232-513 -0100

KEY	PART CODE	DESCRIPTION	SPC	TYPE OF MODEL NP60E16		ITC	COL	GRP	REMARKS
31	2161-513-051-10	FRAME,SEEDLING	*	3					
32	2144-501-011-10	BOLT/M6X16X16	*	3					
33	2232-513-001-10	CAP/20X40	*	1					
34	2232-513-007-00	LOCK/CARRY	*	1					
35	2204-336-009-00	SPRING/HT012	*	1					
36	V500-163-002-00	PIN,SPLIT/3X20	*	1					
37	2232-513-300-30	ARM/HANDLING COMP	*	1					
38	V500-163-003-00	PIN,SPLIT/3X30	*	1					
39	3659-215-003-00	GRIP/11X60	*	1					
40	2197-803-003-00	HOOK/RAIL	*	1					
41	V200-260-602-00	BOLT/M6X20	*	1					
42	V360-260-006-00	NUT/WASHER/M6	*	1					
43	2232-513-011-00	RUBBERBOARD/20X20X12	*	1					
44	2232-513-320-00	PIN/LOCK/CARRY COMP	*	1					
45	2232-513-004-00	SPRING/HC050	*	1					
46	V500-163-002-00	PIN,SPLIT/3X20	*	1					
47	2232-513-400-00	BASE/HANDLING COMP	*	1					
48	V500-163-003-00	PIN,SPLIT/3X30	*	1					
49	2204-513-003-00	CAP,SEEDLING FRAME/P	*	1					
50	2232-513-009-00	BUCKET/FERTILIZE	*	1					
51	2144-501-011-10	BOLT/M6X16X16	*	1					

FIG. 88 FRAME(SEEDLING/SUB)SYSTEM(1/2) (R TYPE EXCEPT F)

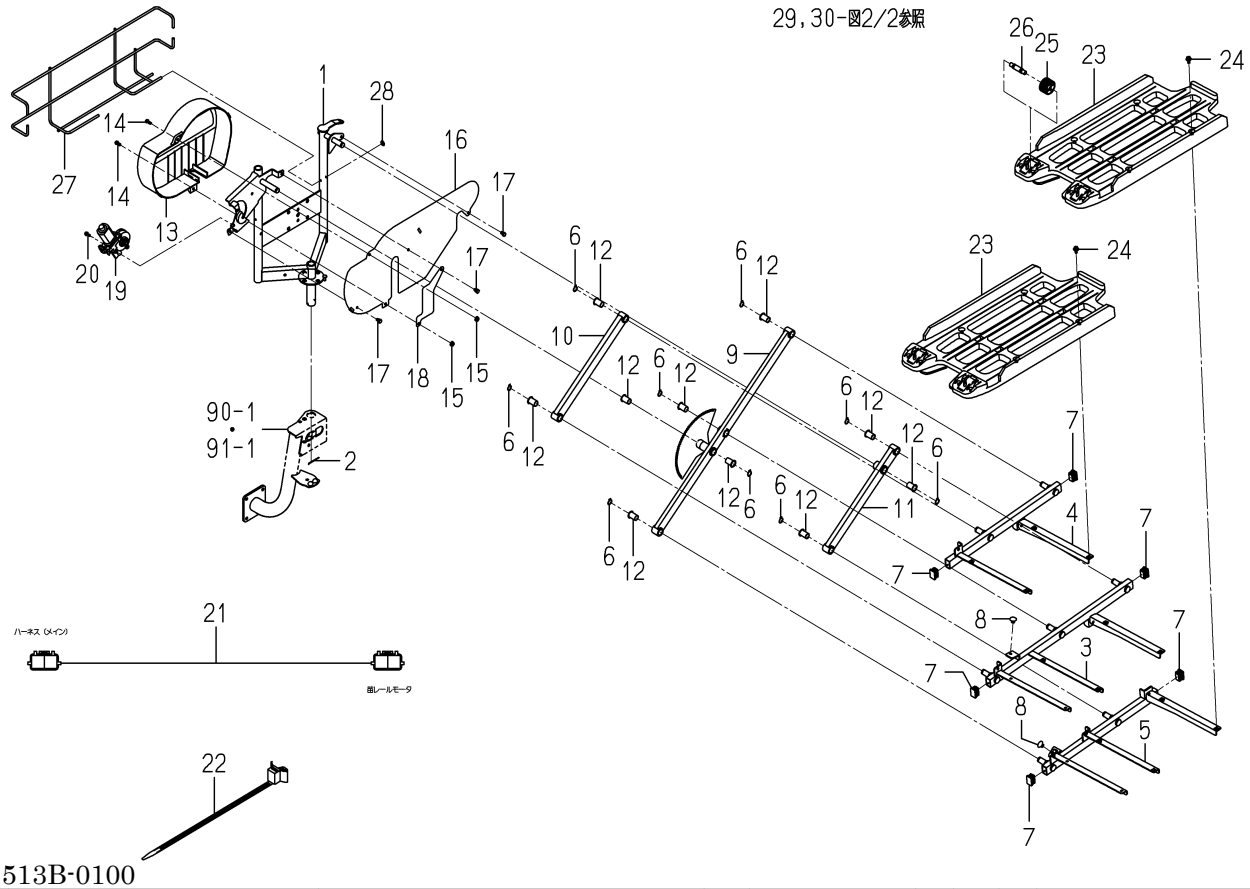

2232-513B-0100

KEY	PART CODE	DESCRIPTION	SPC	TYPE OF MODEL NP60E16		ITC	COL	GRP	REMARKS
1	2204-513-700-21	SEEDLING FRAME/BASE/	*	1			7F		
2	V500-163-004-00	PIN,SPLIT/3X40	*	1					
3	2204-513-720-21	SEEDLING FRAME/SLIDE	*	1			7F		
4	2204-513-730-21	SEEDLING FRAME/SLIDE	*	1			7F		
5	2204-513-740-21	SEEDLING FRAME/SLIDE	*	1			7F		
6	V704-140-015-00	RING,SNAP/15 C	*	9					
7	2204-513-026-00	CAP/30X20	*	6					
8	2186-508-009-00	CLIP,STEP MAT	*	2					
9	2204-513-760-11	ARM/SLIDER/MAIN COMP	*	1			7F		
10	2204-513-780-11	ARM/SLIDER/UPPE COMP	*	1			7F		
11	2204-513-790-11	ARM/SLIDER/LOWE COMP	*	1			7F		
12	1719-630-051-00	BUSH/15X17X25	*	10					
13	2232-513-008-00	COVER/MOTOR/NP	*	1					
14	V120-366-001-60	SCREW,SP/M6X16	*	2					
15	V360-260-006-00	NUT/WASHER/M6	*	2					
16	2204-513-025-01	PLATE/COVER/GEAR	*	1			7F		
17	V210-260-601-20	BOLT,S/M6X12	*	3					
18	2204-513-027-01	PLATE/COVER/GEAR/S	*	1			7F		
19	2194-543-200-00	MOTER	*	1					
20	V120-365-001-60	SCREW,SP/M5X16	*	3					
21	2204-530-200-00	HARNESS/SEEDLIN ASSY	*	1					
22	2204-513-028-00	BAND/CLAMP/PUSH	*	5					
23	2204-513-021-00	SEEDLINGFRAME/SLIDER	*	3					
24	2144-501-011-10	BOLT/M6X16X16	*	12					
25	2163-870-003-10	ROLLER44	*	4					
26	2163-870-035-20	PIN/ROLLER	*	4					
27	2204-513-630-10	HOOK/SEEDLING BOX/SL	*	1					
28	2163-526-006-00	NUT	*	1					
29	2232-513-240-00	SEEDLING FRAME/RH/NP	*	1			7F		
30	V500-163-004-00	PIN,SPLIT/3X40	*	1					

FIG. 88 FRAME(SEEDLING/SUB)SYSTEM(2/2) (R TYPE EXCEPT F)

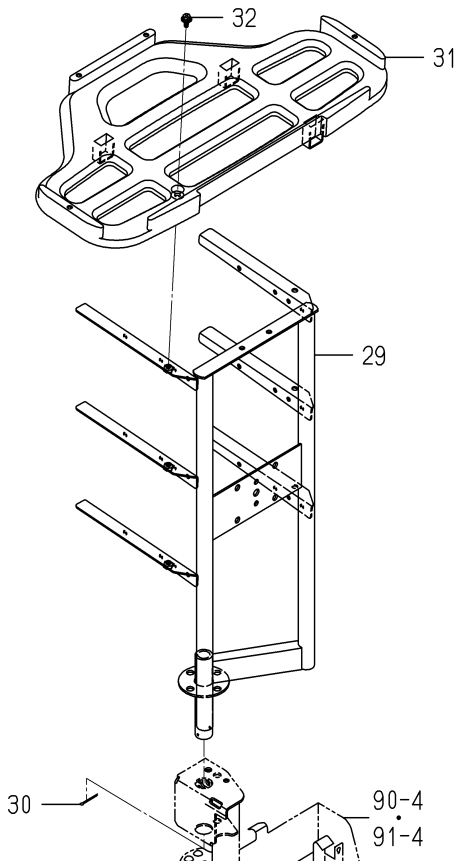

2232-513B-0100

KEY	PART CODE	DESCRIPTION	SPC	TYPE OF MODEL NP60E16		ITC	COL	GRP	REMARKS
31	2161-513-051-10	FRAME,SEEDLING	*	3					
32	2144-501-011-10	BOLT/M6X16X16	*	3					

FIG. 89 FRAME(SEEDLING/SUB)SYSTEM (EXCEPT R TYPE)

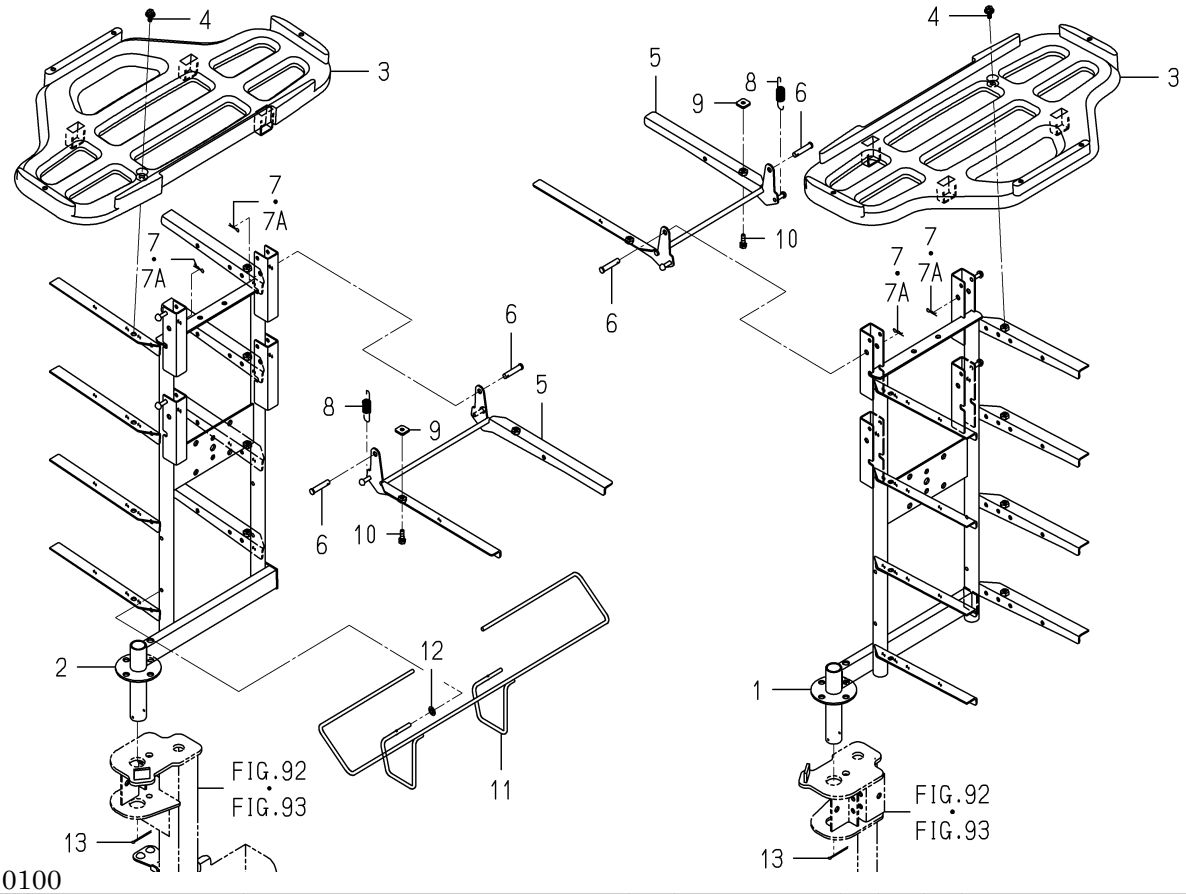

2204-513K-0100

KEY	PART CODE	DESCRIPTION	SPC	TYPE OF MODEL NP60E16		ITC	COL	GRP	REMARKS
1	2204-513-650-32	SEEDLING FRAME/E16/L	*	1			7F		
2	2204-513-660-32	SEEDLING FRAME/E16/R	*	1			7F		
3	2161-513-051-10	FRAME,SEEDLING	*	12					
4	2144-501-011-10	BOLT/M6X16X16	*	12					
5	2204-513-670-02	STAY/SWIVEL SEEDLING	*	4			7F		
6	2132-513-001-00	PIN	*	8					
7	3908-170-020-00	PIN/SNAP/08	*	8 -632					
7A	2161-735-006-00	PIN/STOPPER/8	*	8 633-					
8	2133-812-009-00	SPRING,TENSION	*	4					
9	2204-513-014-00	PLATE/I/19X20	*	4					
10	V210-260-602-00	BOLT,S/M6X20	*	4					
11	2204-513-680-00	HOOK/SCRAPER/K COMP	*	1					
12	2163-526-006-00	NUT	*	1					
13	V500-163-004-00	PIN,SPLIT/3X40	*	2					

FIG. 90 STAY(FRAME/SEEDLING/SUB)SYSTEM (GR TYPE)

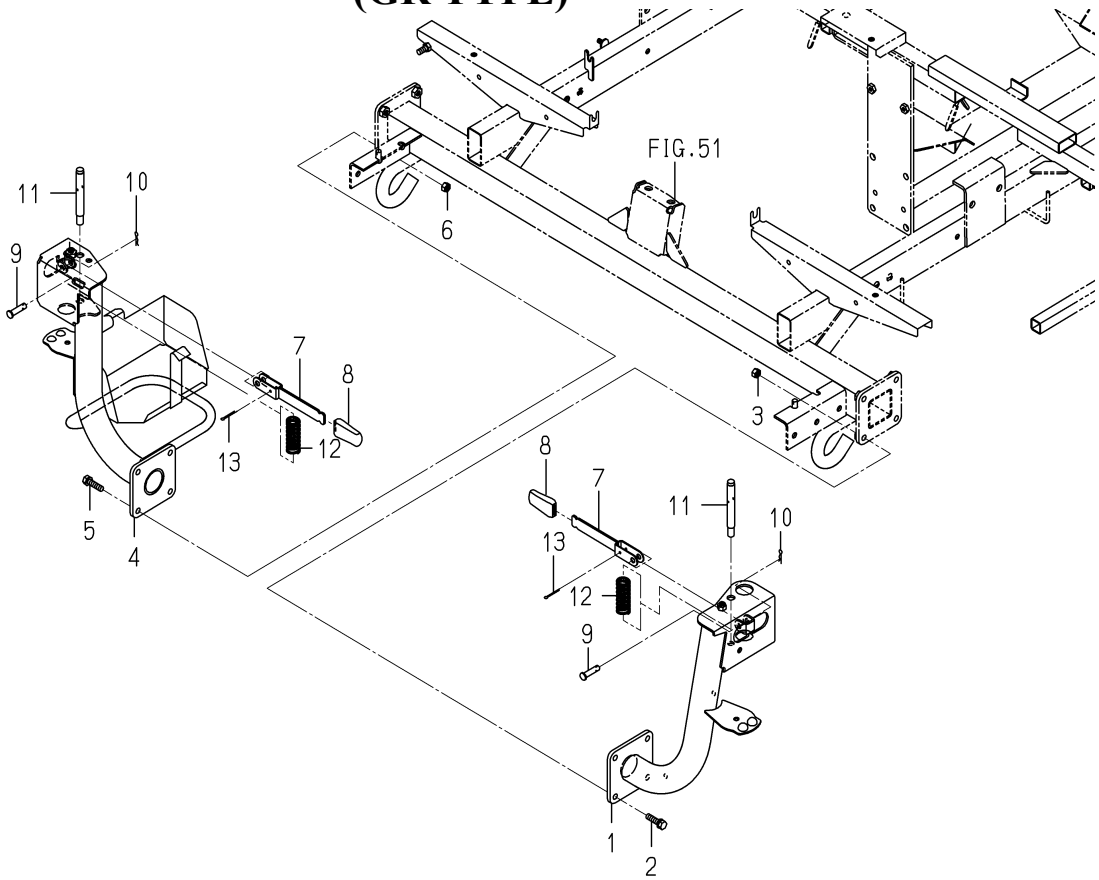

2232-514 -0100

KEY	PART CODE	DESCRIPTION	SPC	TYPE OF MODEL NP60E16		ITC	COL	GRP	REMARKS
1	2232-514-200-30	STAY/SLIDER/LH/NP	*	1			7F		
2	V211-560-803-00	BOLT,S/M8X30/7T	*	4					
3	V304-260-008-00	NUT/M8	*	4					
4	2232-514-300-20	STAY/HANDLING/R COMP	*	1			7F		
5	V211-560-803-00	BOLT,S/M8X30/7T	*	4					
6	V304-260-008-00	NUT/M8	*	4					
7	2204-514-210-00	LEVER	*	2					
8	2145-751-004-00	GRIP	*	2					
9	2175-325-007-00	PIN/08X32	*	2					
10	3908-170-020-00	PIN/SNAP/08	*	2					
11	2204-514-003-00	PIN/12X100	*	2					
12	2798-102-002-00	SPRING	*	2					
13	V500-163-002-50	PIN,SPLIT/3X25	*	2					

FIG. 91 STAY(FRAME/SEEDLING/SUB)SYSTEM (DR TYPE)

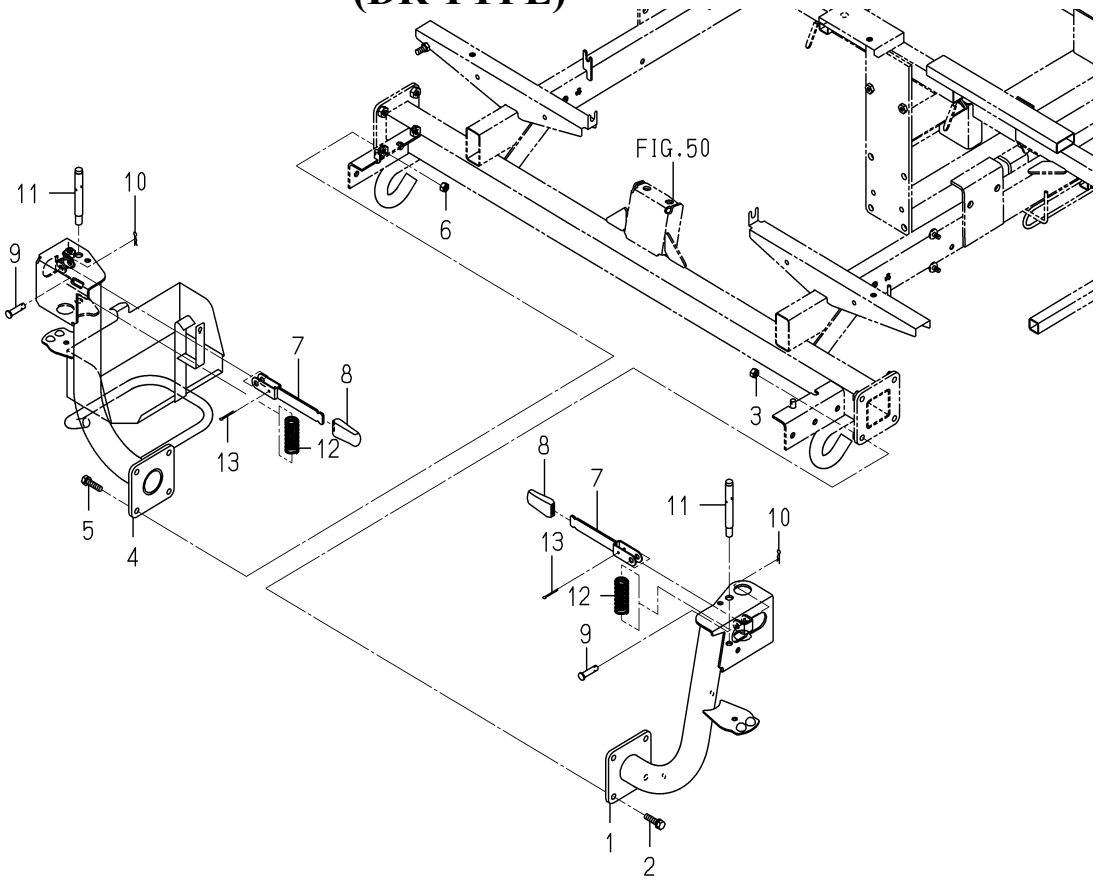

2233-514B-0100

KEY	PART CODE	DESCRIPTION	SPC	TYPE OF MODEL NP60E16		ITC	COL	GRP	REMARKS
1	2232-514-200-30	STAY/SLIDER/LH/NP	*	1			7F		
2	V211-560-803-00	BOLT,S/M8X30/7T	*	4					
3	V304-260-008-00	NUT/M8	*	4					
4	2233-514-320-10	STAY/SEEDLING FRAME/	*	1			7F		
5	V211-560-803-00	BOLT,S/M8X30/7T	*	4					
6	V304-260-008-00	NUT/M8	*	4					
7	2204-514-210-00	LEVER	*	2					
8	2145-751-004-00	GRIP	*	2					
9	2175-325-007-00	PIN/08X32	*	2					
10	3908-170-020-00	PIN/SNAP/08	*	2					
11	2204-514-003-00	PIN/12X100	*	2					
12	2798-102-002-00	SPRING	*	2					
13	V500-163-002-50	PIN,SPLIT/3X25	*	2					

FIG. 92 STAY(FRAME/SEEDLING/SUB)SYSTEM (G TYPE EXCEPT R)

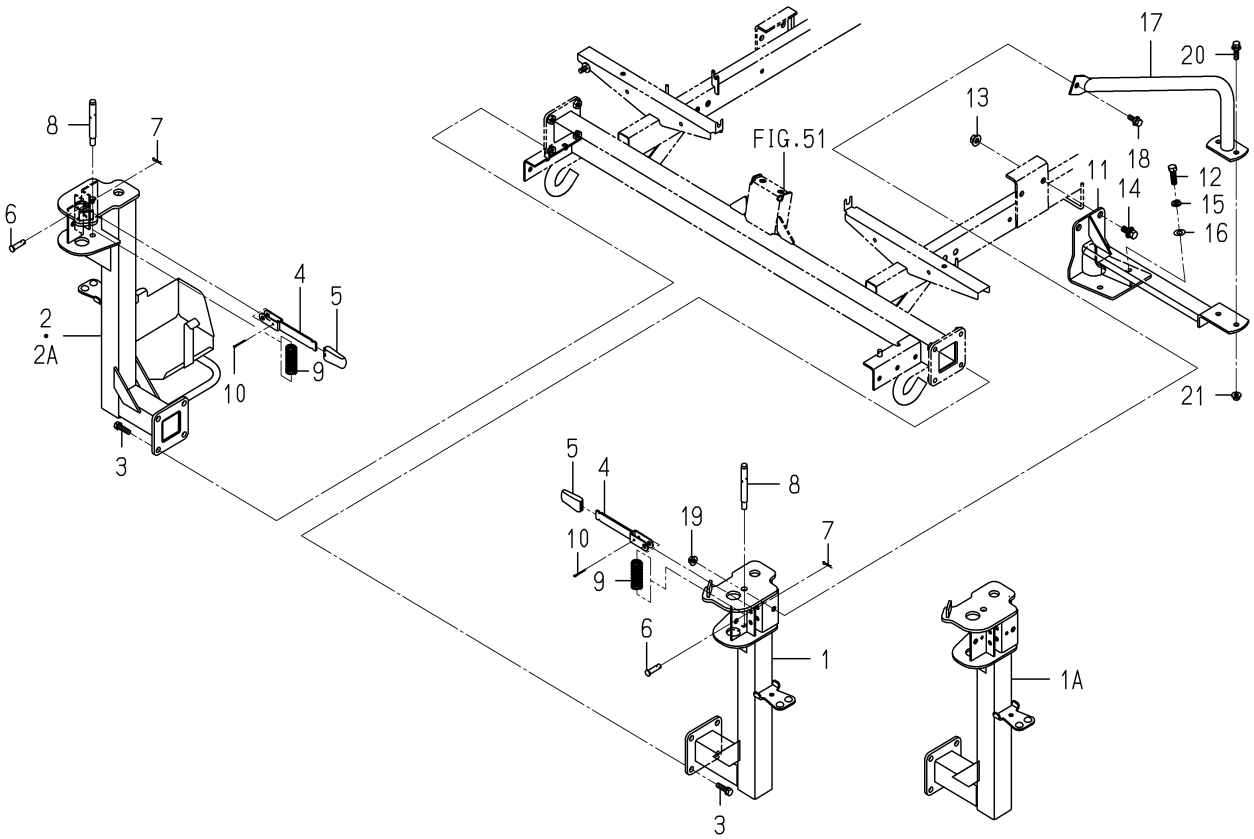

2232-514C-0100

KEY	PART CODE	DESCRIPTION	SPC	TYPE OF MODEL NP60E16		ITC	COL	GRP	REMARKS
1	2232-514-220-00	STAY/SEEDLING FRAME/	*	1 -228			7F		
1A	2232-514-220-10	STAY/SEEDLING FRAME/	*	1 229-		1	7F		
2	2232-514-230-10	STAY/SEEDLING FRAME/	*	1 -228			7F		
2A	2232-514-230-20	STAY/SEEDLING FRAME/	*	1 229-		1	7F		
3	V211-560-803-00	BOLT,S/M8X30/7T	*	8					
4	2204-514-210-00	LEVER	*	2					
5	2145-751-004-00	GRIP	*	2					
6	2175-325-007-00	PIN/08X32	*	2					
7	3908-170-020-00	PIN/SNAP/08	*	2					
8	2204-514-003-00	PIN/12X100	*	2					
9	2798-102-002-00	SPRING	*	2					
10	V500-163-002-50	PIN,SPLIT/3X25	*	2					
11	2232-514-250-00	STAY/SEEDLING FRAME/	*	2			7F		
12	V201-361-003-00	BOLT/M10X30/7T	*	4					
13	V363-260-010-00	NUT/WASHER/M10	*	4					
14	V211-361-002-50	BOLT,SP/M10X25	*	4					
15	V401-160-010-00	WASHER,SP/M10	*	4					
16	V411-260-010-00	WASHER,PL/M10	*	4					
17	2232-514-240-00	TUBE/SEEDLING FRAME/	*	2			7F		
18	V211-360-802-00	BOLT,SP/M8X20	*	2					
19	V362-260-008-00	NUT/WASHER/M8	*	2					
20	V211-360-803-00	BOLT,SP/M8X30	*	4					
21	V362-260-008-00	NUT/WASHER/M8	*	4					

FIG. 93 STAY(FRAME/SEEDLING/SUB)SYSTEM (D TYPE EXCEPT R)

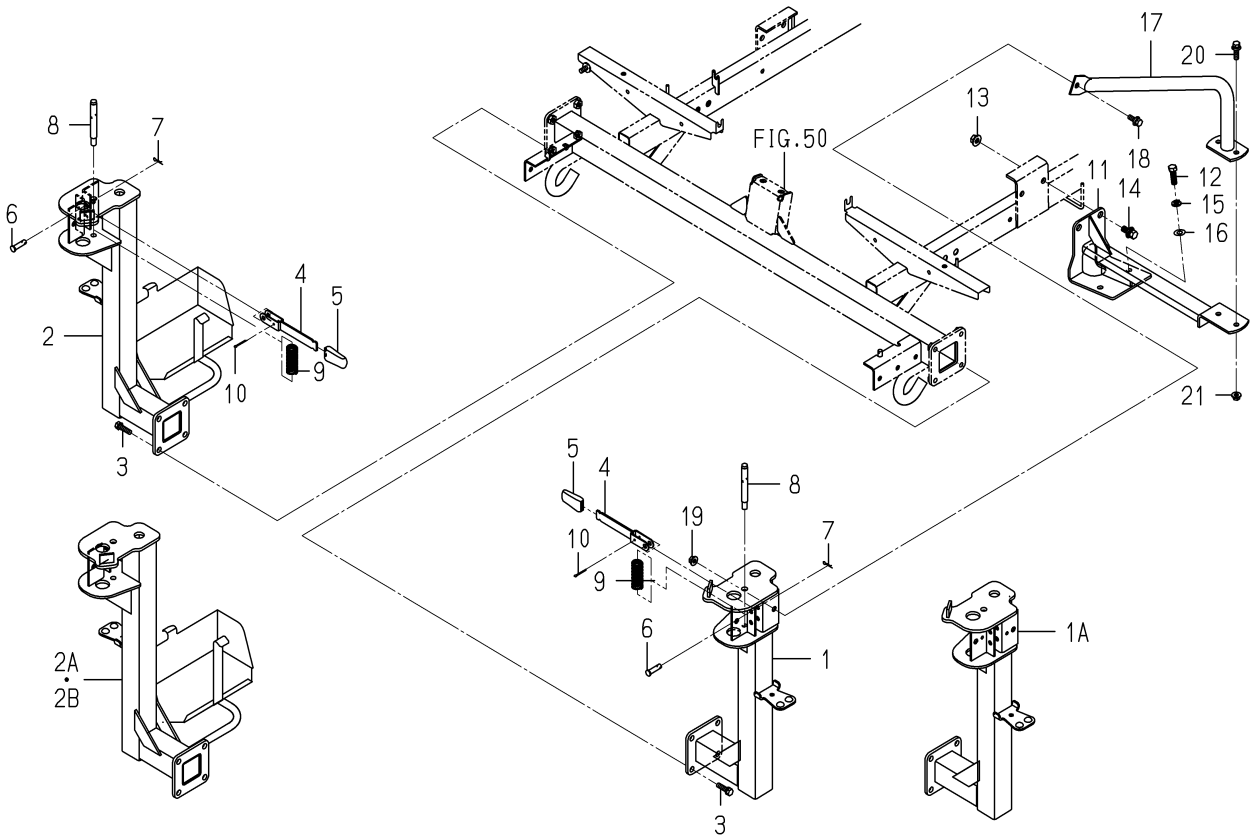

2232-514D-0100

KEY	PART CODE	DESCRIPTION	SPC	TYPE OF MODEL NP60E16		ITC	COL	GRP	REMARKS
1	2232-514-220-00	STAY/SEEDLING FRAME/	*	1 -228			7F		
1A	2232-514-220-10	STAY/SEEDLING FRAME/	*	1 229-		1	7F		
2	2232-514-400-00	STAY/SEEDLING FRAME/	*	1 -60			7F		
2A	2232-514-400-10	STAY/SEEDLING FRAME/	*	1 -229		1	7F		
2B	2232-514-400-20	STAY/SEEDLING FRAME/	*	1 230-		1	7F		
3	V211-560-803-00	BOLT,S/M8X30/7T	*	8					
4	2204-514-210-00	LEVER	*	2					
5	2145-751-004-00	GRIP	*	2					
6	2175-325-007-00	PIN/08X32	*	2					
7	3908-170-020-00	PIN/SNAP/08	*	2					
8	2204-514-003-00	PIN/12X100	*	2					
9	2798-102-002-00	SPRING	*	2					
10	V500-163-002-50	PIN,SPLIT/3X25	*	2					
11	2232-514-250-00	STAY/SEEDLING FRAME/	*	2			7F		
12	V201-361-003-00	BOLT/M10X30/7T	*	4					
13	V363-260-010-00	NUT/WASHER/M10	*	4					
14	V211-361-002-50	BOLT,SP/M10X25	*	4					
15	V401-160-010-00	WASHER,SP/M10	*	4					
16	V411-260-010-00	WASHER,PL/M10	*	4					
17	2232-514-240-00	TUBE/SEEDLING FRAME/	*	2			7F		
18	V211-360-802-00	BOLT,SP/M8X20	*	2					
19	V362-260-008-00	NUT/WASHER/M8	*	2					
20	V211-360-803-00	BOLT,SP/M8X30	*	4					
21	V362-260-008-00	NUT/WASHER/M8	*	4					

FIG. 94 MIRROR SYSTEM(EXCEPT R TYPE)

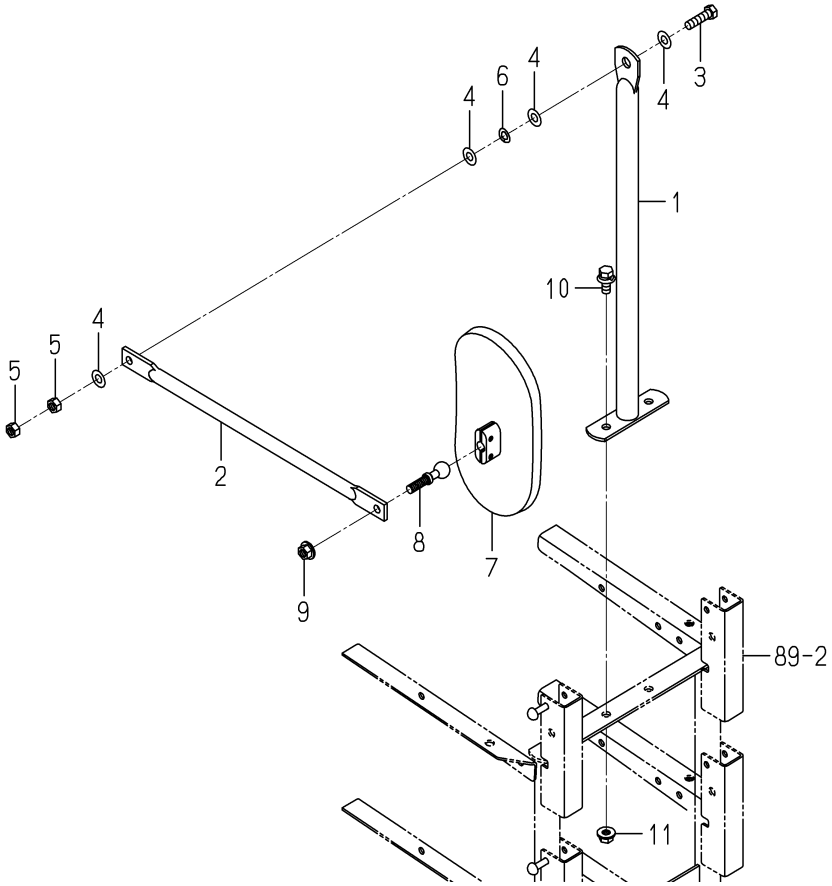

2204-515K-0100

KEY	PART CODE	DESCRIPTION	SPC	TYPE OF MODEL NP60E16		ITC	COL	GRP	REMARKS
1	2204-515-300-02	TUBE/MIRROR/K COMP	*	1			7F		
2	2204-515-001-02	STAY/MIRROR/K	*	1			7F		
3	V201-360-803-00	BOLT/M8X30/7T	*	1					
4	V411-260-008-00	WASHER,PL/M8	*	4					
5	V304-460-008-00	NUT/M8/7T	*	2					
6	3533-306-001-00	SPAC/M8	*	1					
7	1541-621-210-00	MIRROR ASSY	*	1					
8	1600-619-212-00	PIVOT	*	1					
9	V362-260-008-00	NUT/WASHER/M8	*	1					
10	V211-360-802-00	BOLT,SP/M8X20	*	2					
11	V362-260-008-00	NUT/WASHER/M8	*	2					

FIG. 95 SEAT SYSTEM

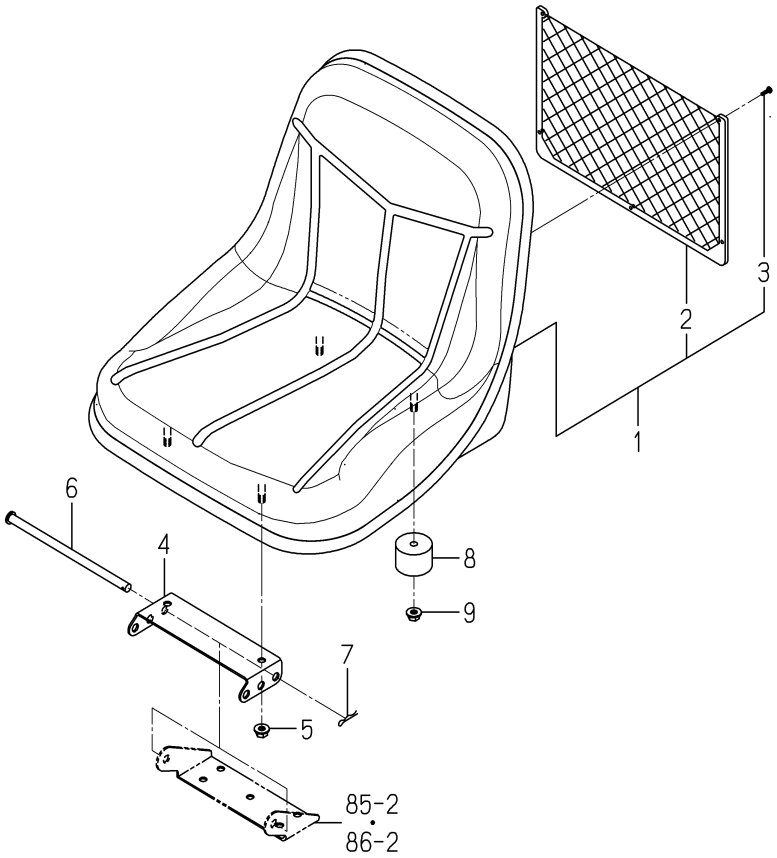

2232-517 -0100

KEY	PART CODE	DESCRIPTION	SPC	TYPE OF MODEL NP60E16		ITC	COL	GRP	REMARKS
1	2232-517-200-00	SEAT/NP ASSY	*	1					
2	2213-517-201-00	NETPOCKET	*	1					
3	V195-164-012-10	SCREW/TAPPING	*	5					
4	2213-517-003-10	PLATE/SEAT/PZ/8	*	1					
5	V362-260-008-00	NUT/WASHER/M8	*	2					
6	1488-611-003-10	PIN,SEAT SET	*	1					
7	3505-704-003-00	PIN,HAIR (10)	*	1					
8	2232-517-001-00	CUSHION/SEAT/NP	*	2					
9	V362-260-008-00	NUT/WASHER/M8	*	2					

FIG. 96 MARKER(CENTER)SYSTEM

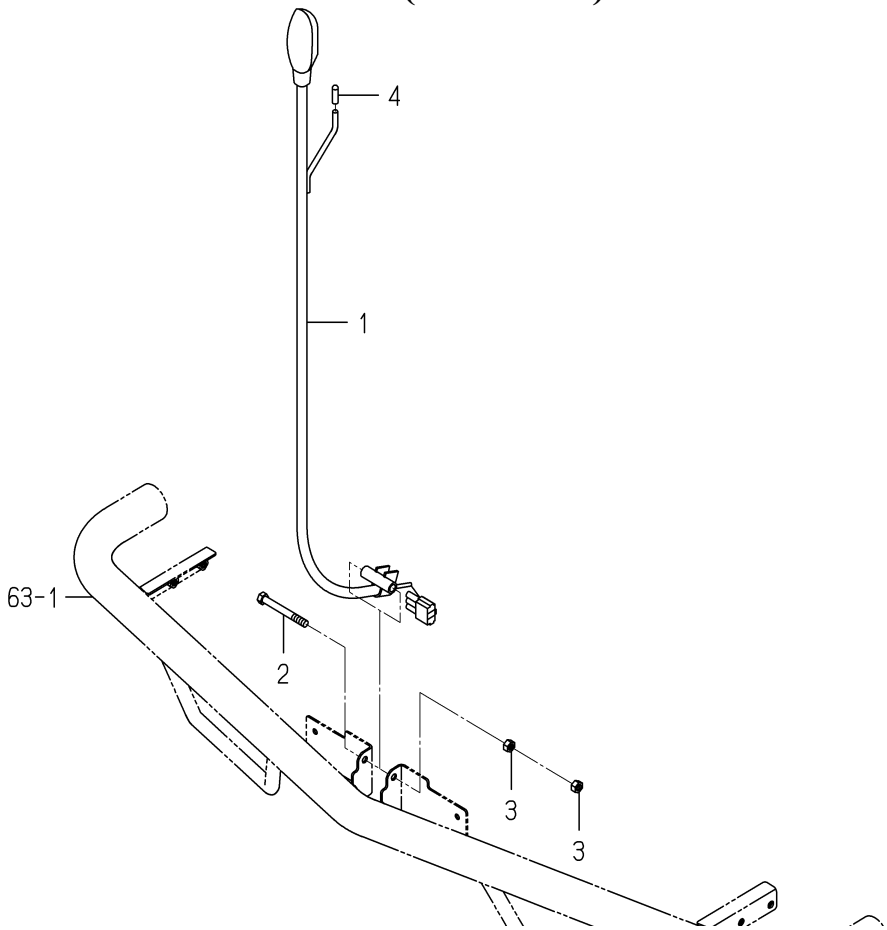

2232-524 -0100

KEY	PART CODE	DESCRIPTION	SPC	TYPE OF MODEL NP60E16		ITC	COL	GRP	REMARKS
1	2233-524-200-00	LAMP/MASCOT/NP8 ASSY	*	1					
2	V201-260-807-00	BOLT/M8X70	*	1					
3	V304-260-008-00	NUT/M8	*	2					
4	4512-106-005-00	CAP/D6/YELLOW	*	1					

FIG. 97 MARKER(SIDE)SYSTEM

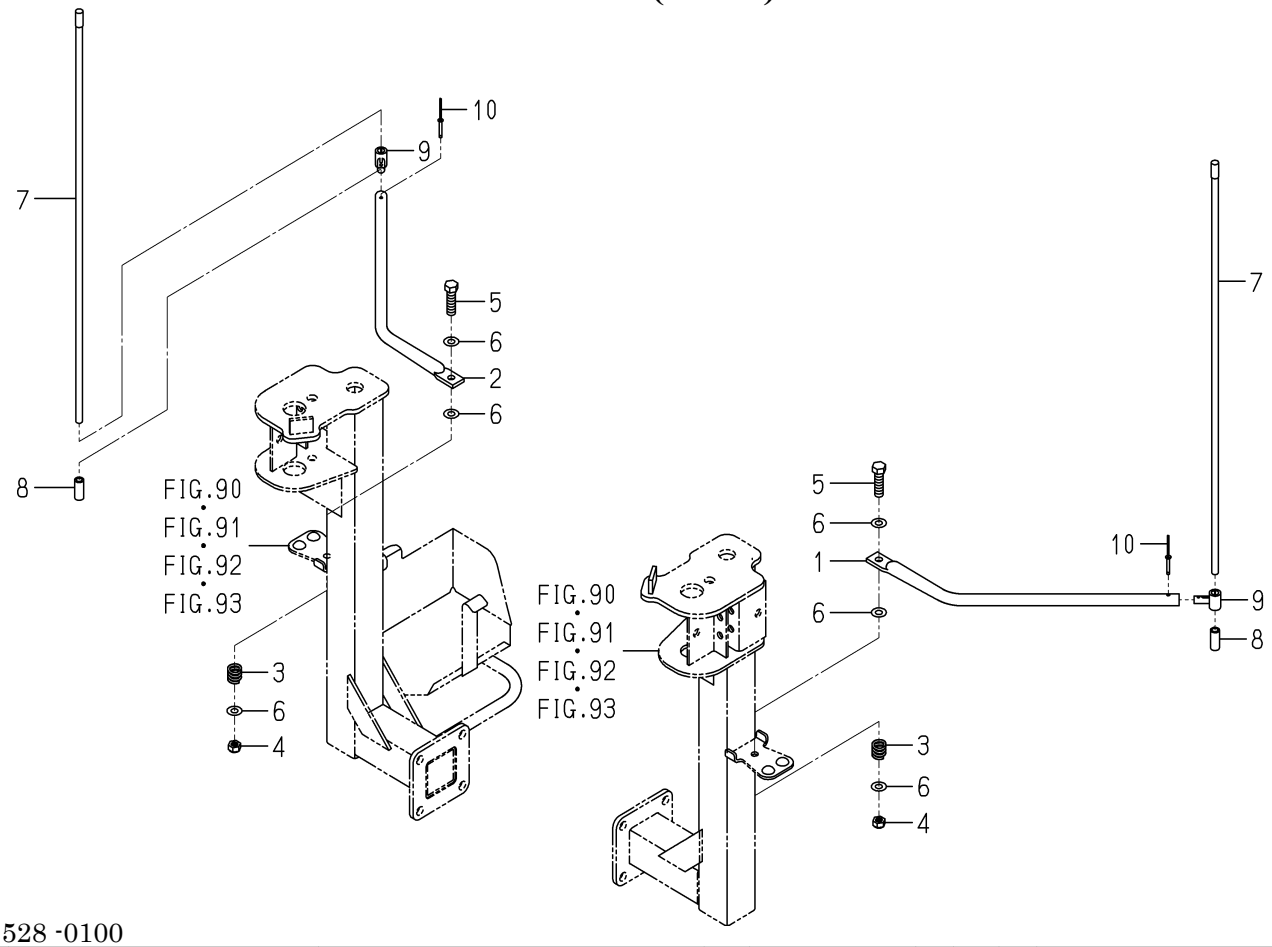

2232-528 -0100

KEY	PART CODE	DESCRIPTION	SPC	TYPE OF MODEL NP60E16		ITC	COL	GRP	REMARKS
1	2232-528-001-00	MARKER/SIDE/6/LH/NP	*	1			7F		
2	2232-528-004-00	MARKER/SIDE/6/RH/NP	*	1			7F		
3	2172-124-004-00	SPRING	*	2					
4	2144-117-002-00	NUT/M8	*	2					
5	V201-260-804-00	BOLT/M8X40	*	2					
6	V411-260-008-00	WASHER,PL/M8	*	6					
7	2161-528-001-00	MARKER(M)	*	2					
8	2186-528-007-00	CAP	*	2					
9	2175-528-008-20	BOSS,EXTENSION MARKE	*	2					
10	2186-528-244-00	RIVET	*	2					

FIG. 98 LIGHT(HEAD)SYSTEM

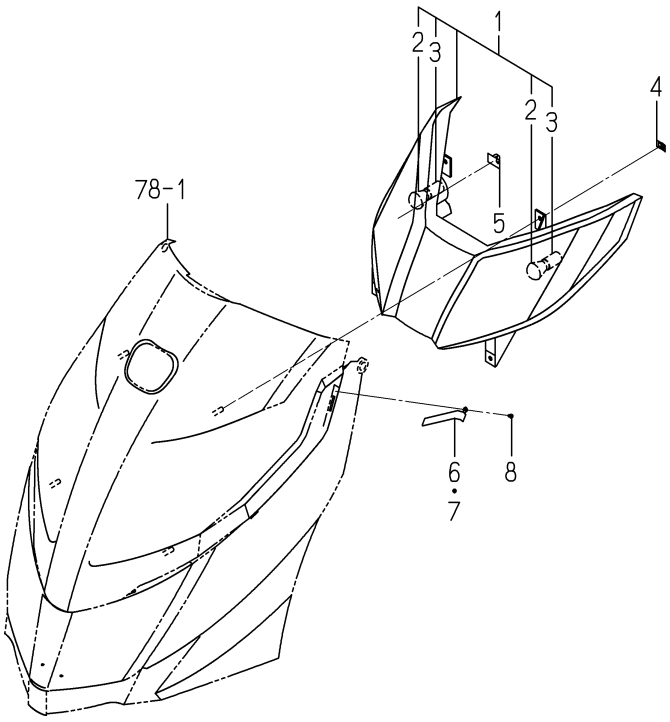

2232-532 -0100

KEY	PART CODE	DESCRIPTION	SPC	TYPE OF MODEL NP60E16		ITC	COL	GRP	REMARKS
1	2232-532-200-00	LAMP/HEAD/NP ASSY	*	1					
2	2161-532-202-00	BULB/12V18W	*	2					
3	2161-532-203-00	SOCKET	*	2					
4	V350-160-005-00	NUT,SPEED/M5	*	4					
5	1426-621-038-00	CLAMP,HARNESS	*	1					
6	2232-532-004-00	STOPPER/LAMP/HOOD/LH	*	1 61-					
7	2232-532-005-00	STOPPER/LAMP/HOOD/RH	*	1 61-					
8	V195-163-006-10	SCREW/TAPPING	*	2 61-					

FIG. 99 PANEL(INSTRUMENT)SYSTEM(1/2) (D TYPE EXCEPT R)

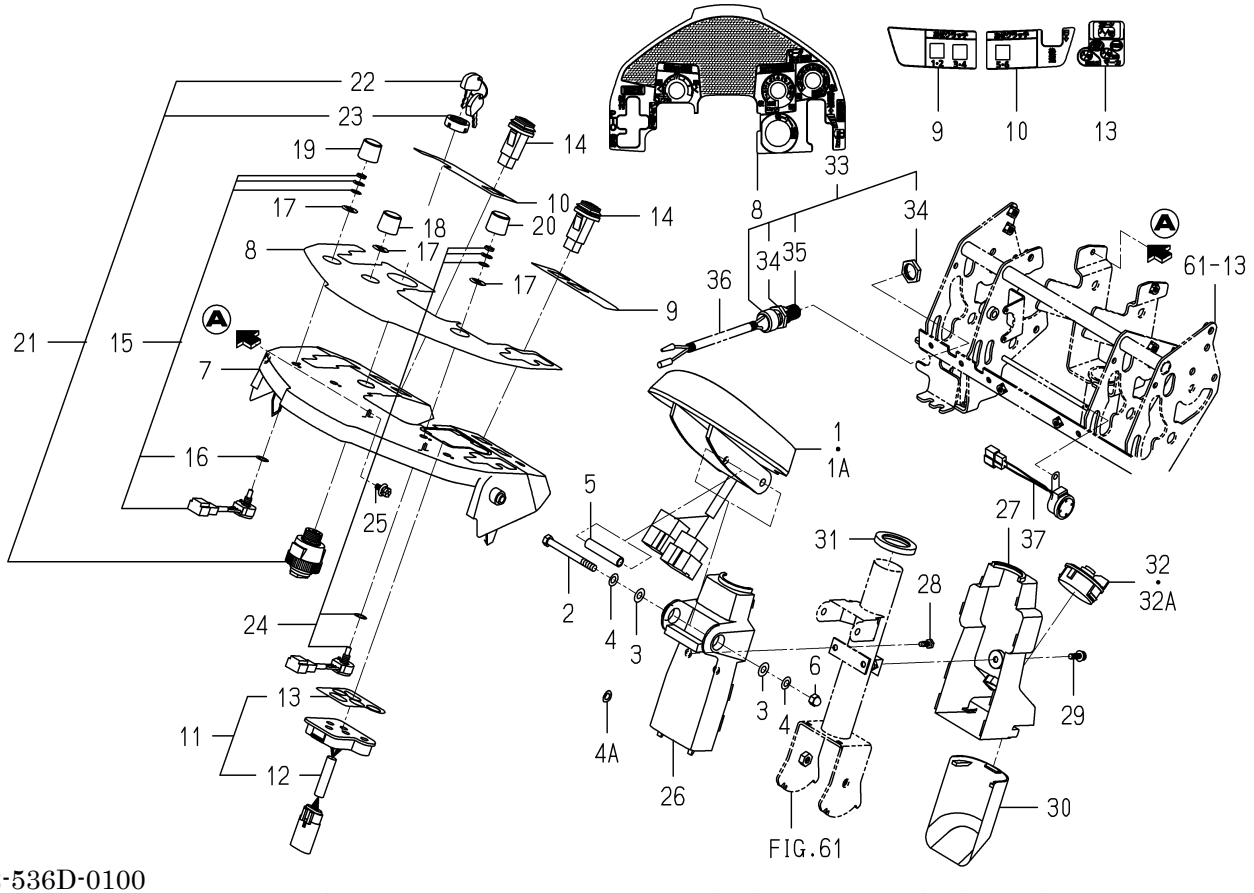

2232-536D-0100

KEY	PART CODE	DESCRIPTION	SPC	TYPE OF MODEL NP60E16		ITC	COL	GRP	REMARKS
1	2232-536-300-00	PANEL/MONITOR/NP/E16	*	1 -570					
1A	2232-536-300-10	PANEL/MONITOR/NP/E16	*	1 571-		1			
2	V201-260-808-00	BOLT/M8X80	*	1					
3	V411-260-008-00	WASHER,PL/M8	*	2					
4	2197-704-002-00	SPRING/8	*	2 -60					
4A	3533-306-001-00	SPAC/M8	*	2 61-					
5	2232-536-007-00	COLLAR/09X12X57	*	1					
6	2232-536-008-00	UNUT/M8/CAP	*	1					
7	2232-536-003-10	PANEL/HOOD/NP	*	1					
8	2232-912-042-00	LABEL/PANEL/MAIN/6D/	*	1					
9	2232-912-043-00	LABEL/PANEL/LH/6/E16	*	1					
10	2232-912-044-00	LABEL/PANEL/RH/6/E16	*	1					
11	2232-536-330-00	SWITCH/CONTROLLER/E1	*	1					
12	2232-536-250-00	SWITCH/CONTROLLER/NP	*	1					
13	2232-912-045-00	LABEL/TACT/SWITCH/E1	*	1					
14	2512-665-220-00	SWITCH/MOMENTARY/G/W	*	3					
15	1729-609-240-00	SWITCH/VR ASSY	*	2					
16	1675-695-005-00	INSULATOR	*	2					
17	3652-273-002-00	SORING	*	3					
18	2204-536-551-00	KNOB/HYDRAULIC SENSI	*	1					
19	3849-270-402-00	KNOB/BL	*	1					
20	3849-270-403-00	KNOB/GR	*	1					
21	1716-680-200-20	SWITCH/MAIN ASSY	*	1					
22	2186-536-211-00	KEY	*	2					
23	2186-536-212-00	NUT/RING	*	1					
24	2232-536-290-00	SWITCH/VR/NP ASSY	*	1					
25	2144-501-011-10	BOLT/M6X16X16	*	2					
26	2232-536-001-10	COVER/COLUMN/FRONT/N	*	1					
27	2232-536-002-00	COVER/COLUMN/REAR/NP	*	1					
28	2161-506-005-00	SCREW/TAPPING/6X16	*	2					

FIG. 99 PANEL(INSTRUMENT)SYSTEM(2/2) (D TYPE EXCEPT R)

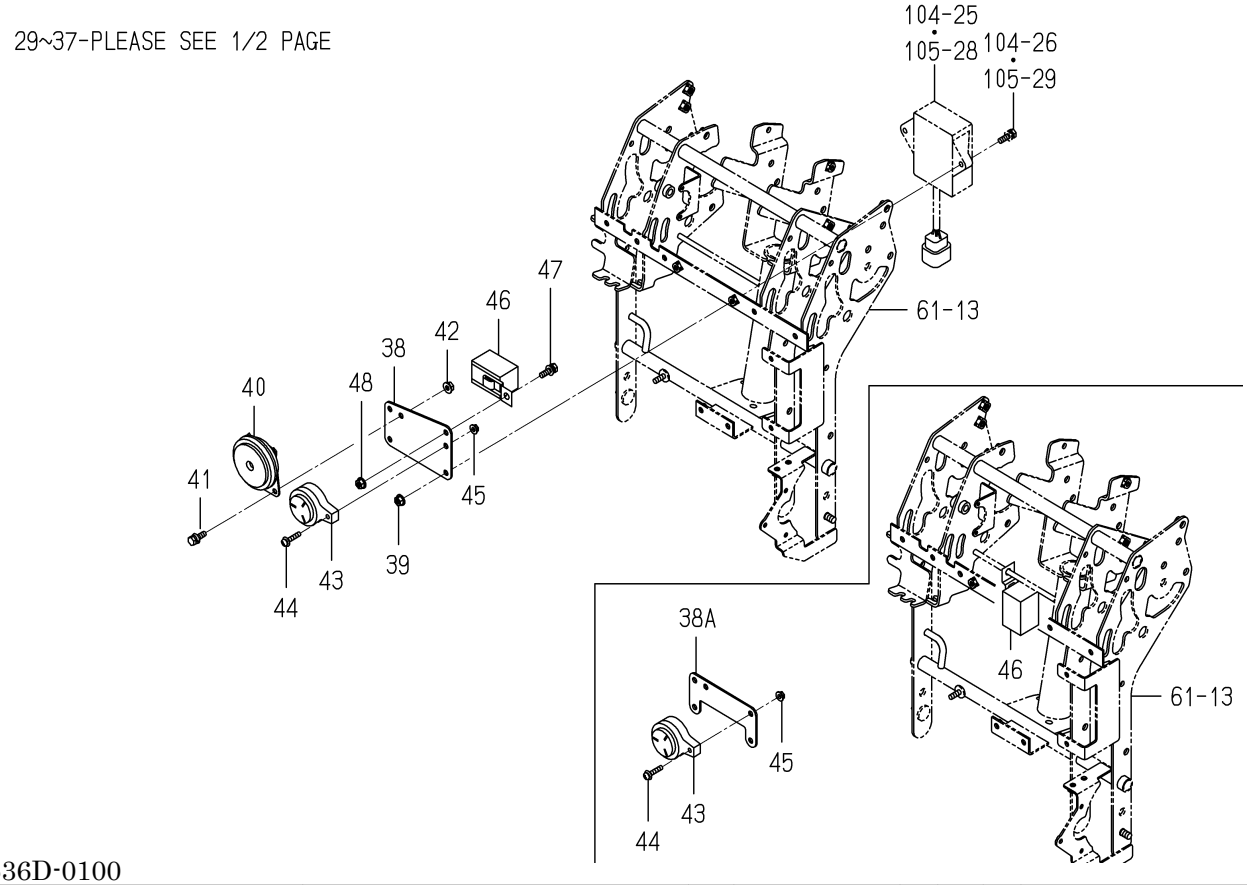

2232-536D-0100

KEY	PART CODE	DESCRIPTION	SPC	TYPE OF MODEL NP60E16		ITC	COL	GRP	REMARKS
29	V120-366-001-60	SCREW,SP/M6X16	*	1					
30	2232-536-006-00	COVER/COLUMN/LOWER/N	*	1					
31	2232-536-011-00	CAP/COVER/COLUMN/NP	*	1					
32	3843-271-210-00	SWITVH/COMBI	*	1 -630					
32A	3843-271-210-10	SWITCH/COMBINATION	*	1 631-		1			
33	2144-542-220-00	SWITCH,SAFETY ASSY	*	1					
34	1491-623-222-00	NUT/M20	*	2					
35	1491-623-223-00	BOOT	*	1					
36	2151-810-004-10	CORRUGATED TUBE/07X1	*	1					
37	2515-665-210-00	BUZZER	*	1					
38	2232-536-012-00	PLATE/SWITCH/E16/NP	*	1 -1644					
38A	2232-536-012-10	PLATE/SWITCH/E16/NP	*	1 1645-		1			
39	V360-260-006-00	NUT/WASHER/M6	*	2					
40	1740-680-530-20	HORN ASSY	*	1					
41	V210-360-601-60	BOLT,SP/M6X16	*	2					
42	V360-260-006-00	NUT/WASHER/M6	*	2					
43	2204-542-200-00	BUZZERASSY	*	1					
44	V120-365-002-50	SCREW,SP/M5X25	*	1					
45	V360-260-005-00	NUT/WASHER/M5	*	1					
46	1650-652-390-00	RELAY/FLASHER ASSY	*	1					
47	V210-360-601-60	BOLT,SP/M6X16	*	1 -1644					
48	V360-260-006-00	NUT/WASHER/M6	*	1 -1644					

FIG.100 PANEL(INSTRUMENT)SYSTEM(1/2) (G TYPE EXCEPT R)

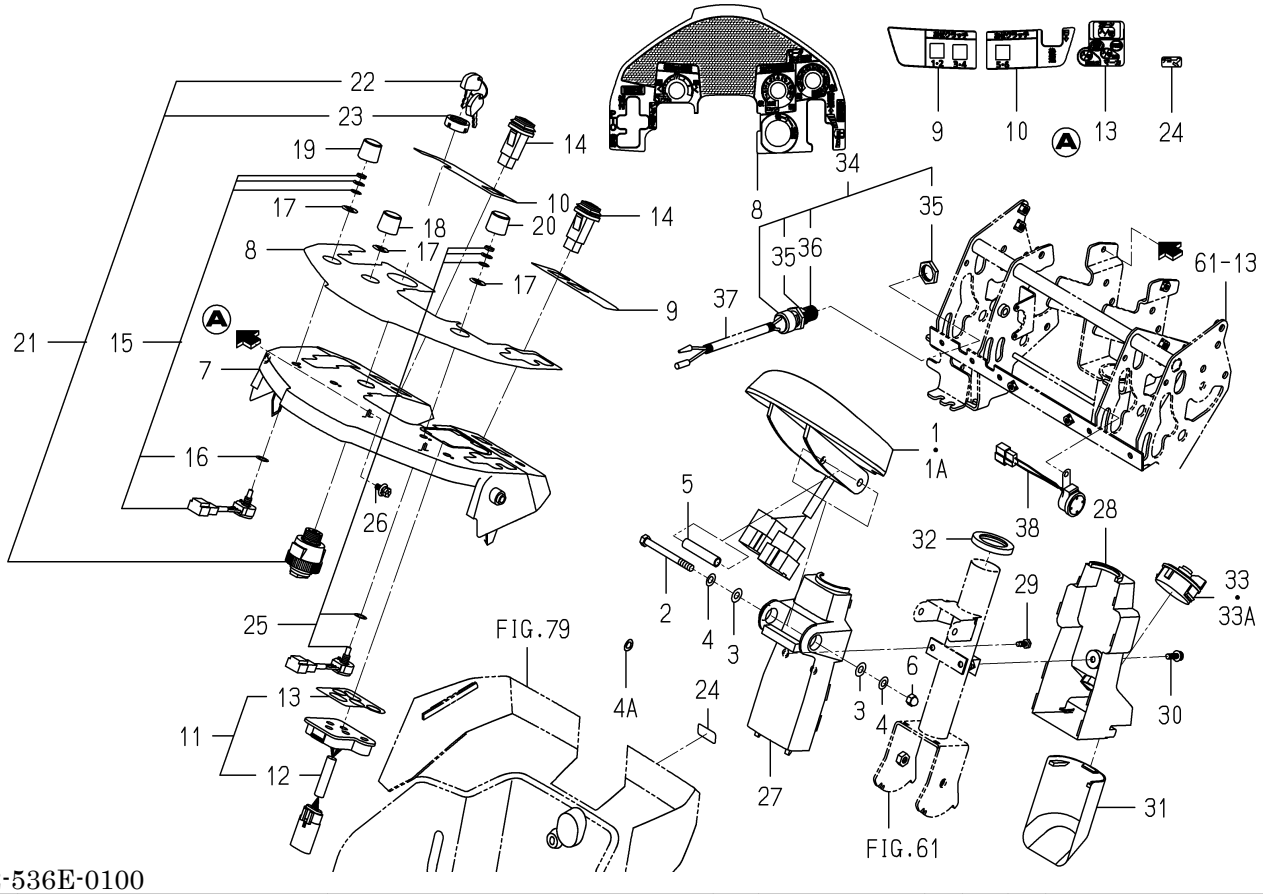

2232-536E-0100

KEY	PART CODE	DESCRIPTION	SPC	TYPE OF MODEL NP60E16		ITC	COL	GRP	REMARKS
1	2232-536-300-00	PANEL/MONITOR/NP/E16	*	1 -570					
1A	2232-536-300-10	PANEL/MONITOR/NP/E16	*	1 571-		1			
2	V201-260-808-00	BOLT/M8X80	*	1					
3	V411-260-008-00	WASHER,PL/M8	*	2					
4	2197-704-002-00	SPRING/8	*	2 -60					
4A	3533-306-001-00	SPAC/M8	*	2 61-					
5	2232-536-007-00	COLLAR/09X12X57	*	1					
6	2232-536-008-00	UNUT/M8/CAP	*	1					
7	2232-536-003-10	PANEL/HOOD/NP	*	1					
8	2232-912-041-00	LABEL/PANEL/MAIN/6G/	*	1					
9	2232-912-043-00	LABEL/PANEL/LH/6/E16	*	1					
10	2232-912-044-00	LABEL/PANEL/RH/6/E16	*	1					
11	2232-536-330-00	SWITCH/CONTROLLER/E1	*	1					
12	2232-536-250-00	SWITCH/CONTROLLER/NP	*	1					
13	2232-912-045-00	LABEL/TACT/SWITCH/E1	*	1					
14	2512-665-220-00	SWITCH/MOMENTARY/G/W	*	3					
15	1729-609-240-00	SWITCH/VR ASSY	*	2					
16	1675-695-005-00	INSULATOR	*	2					
17	3652-273-002-00	SORING	*	3					
18	2204-536-551-00	KNOB/HYDRAULIC SENSI	*	1					
19	3849-270-402-00	KNOB/BL	*	1					
20	3849-270-403-00	KNOB/GR	*	1					
21	2186-536-210-20	SWITCH,STARTER	*	1					
22	2186-536-211-00	KEY	*	1					
23	2186-536-212-00	NUT/RING	*	1					
24	2232-912-028-00	LABEL/CHOKE	*	1					
25	2232-536-290-00	SWITCH/VR/NP ASSY	*	1					
26	2144-501-011-10	BOLT/M6X16X16	*	2					
27	2232-536-001-10	COVER/COLUMN/FRONT/N	*	1					
28	2232-536-002-00	COVER/COLUMN/REAR/NP	*	1					

FIG.100 PANEL(INSTRUMENT)SYSTEM(2/2) (G TYPE EXCEPT R)

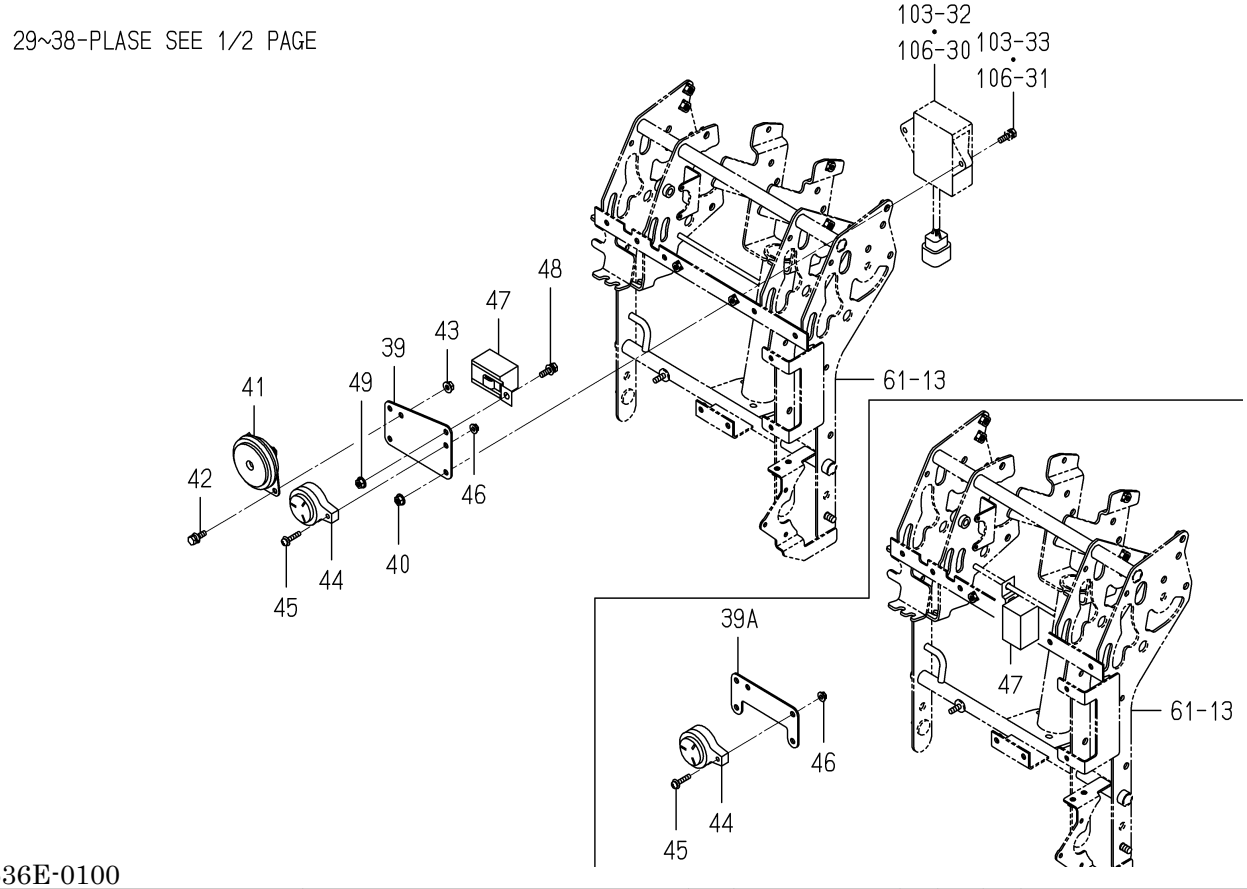

2232-536E-0100

KEY	PART CODE	DESCRIPTION	SPC	TYPE OF MODEL NP60E16		ITC	COL	GRP	REMARKS
29	2161-506-005-00	SCREW/TAPPING/6X16	*	2					
30	V120-366-001-60	SCREW,SP/M6X16	*	1					
31	2232-536-006-00	COVER/COLUMN/LOWER/N	*	1					
32	2232-536-011-00	CAP/COVER/COLUMN/NP	*	1					
33	3843-271-210-00	SWITVH/COMBI	*	1 -630					
33A	3843-271-210-10	SWITCH/COMBINATION	*	1 631-		1			
34	2144-542-220-00	SWITCH,SAFETY ASSY	*	1					
35	1491-623-222-00	NUT/M20	*	2					
36	1491-623-223-00	BOOT	*	1					
37	2151-810-004-10	CORRUGATED TUBE/07X1	*	1					
38	2515-665-210-00	BUZZER	*	1					
39	2232-536-012-00	PLATE/SWITCH/E16/NP	*	1 -1644					
39A	2232-536-012-10	PLATE/SWITCH/E16/NP	*	1 1645-		1			
40	V360-260-006-00	NUT/WASHER/M6	*	2					
41	1740-680-530-20	HORN ASSY	*	1					
42	V210-360-601-60	BOLT,SP/M6X16	*	2					
43	V360-260-006-00	NUT/WASHER/M6	*	2					
44	2204-542-200-00	BUZZERASSY	*	1					
45	V120-365-002-50	SCREW,SP/M5X25	*	1					
46	V360-260-005-00	NUT/WASHER/M5	*	1					
47	1650-652-390-00	RELAY/FLASHER ASSY	*	1					
48	V210-360-601-60	BOLT,SP/M6X16	*	1 -1644					
49	V360-260-006-00	NUT/WASHER/M6	*	1 -1644					

FIG.101 PANEL(INSTRUMENT)SYSTEM(GR TYPE)(1/2)

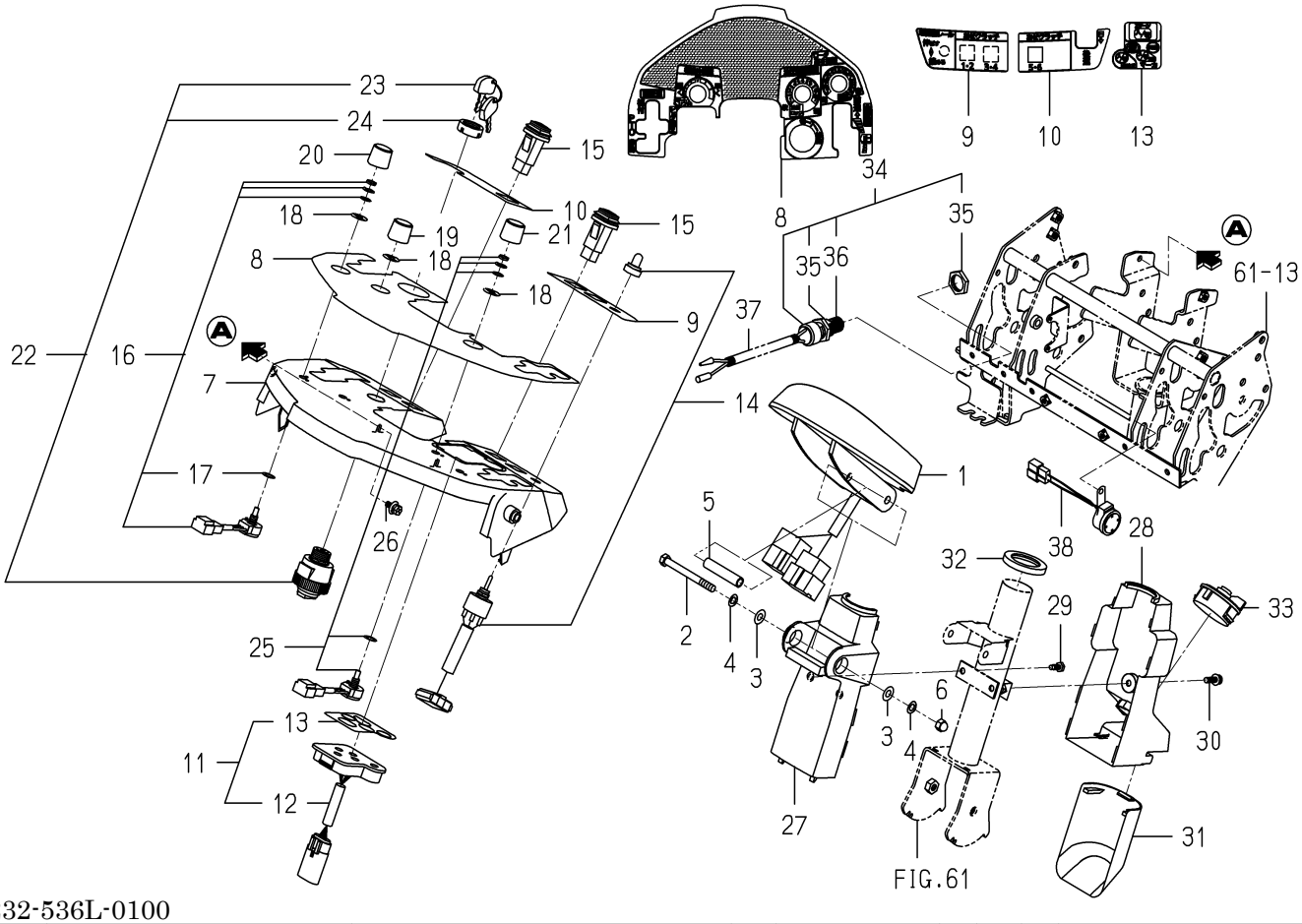

2232-536L-0100

KEY	PART CODE	DESCRIPTION	SPC	TYPE OF MODEL NP60E16		ITC	COL	GRP	REMARKS
1	2232-536-300-10	PANEL/MONITOR/NP/E16	*	1					
2	V201-260-808-00	BOLT/M8X80	*	1					
3	V411-260-008-00	WASHER,PL/M8	*	2					
4	3533-306-001-00	SPAC/M8	*	2					
5	2232-536-007-00	COLLAR/09X12X57	*	1					
6	2232-536-008-00	UNUT/M8/CAP	*	1					
7	2232-536-003-10	PANEL/HOOD/NP	*	1					
8	2232-912-041-00	LABEL/PANEL/MAIN/6G/	*	1					
9	2232-912-049-00	LABEL/PANEL/LH/6/N/E	*	1					
10	2232-912-044-00	LABEL/PANEL/RH/6/E16	*	1					
11	2232-536-330-00	SWITCH/CONTROLLER/E1	*	1					
12	2232-536-250-00	SWITCH/CONTROLLER/NP	*	1					
13	2232-912-045-00	LABEL/TACT/SWITCH/E1	*	1					
14	2204-530-300-00	SWITCH/POWER TRAIN S	*	1					
15	2512-665-220-00	SWITCH/MOMENTARY/G/W	*	3					
16	1729-609-240-00	SWITCH/VR ASSY	*	2					
17	1675-695-005-00	INSULATOR	*	2					
18	3652-273-002-00	SORING	*	3					
19	2204-536-551-00	KNOB/HYDRAULIC SENSI	*	1					
20	3849-270-402-00	KNOB/BL	*	1					
21	3849-270-403-00	KNOB/GR	*	1					
22	2186-536-210-20	SWITCH,STARTER	*	1					
23	2186-536-211-00	KEY	*	1					
24	2186-536-212-00	NUT/RING	*	1					
25	2232-536-290-00	SWITCH/VR/NP ASSY	*	1					
26	2144-501-011-10	BOLT/M6X16X16	*	2					
27	2232-536-001-10	COVER/COLUMN/FRONT/N	*	1					
28	2232-536-002-00	COVER/COLUMN/REAR/NP	*	1					
29	2161-506-005-00	SCREW/TAPPING/6X16	*	2					
30	V120-366-001-60	SCREW,SP/M6X16	*	1					

FIG.101 PANEL(INSTRUMENT)SYSTEM(GR TYPE)(2/2)

31~38-PLEASE SEE 1/2 PAGE

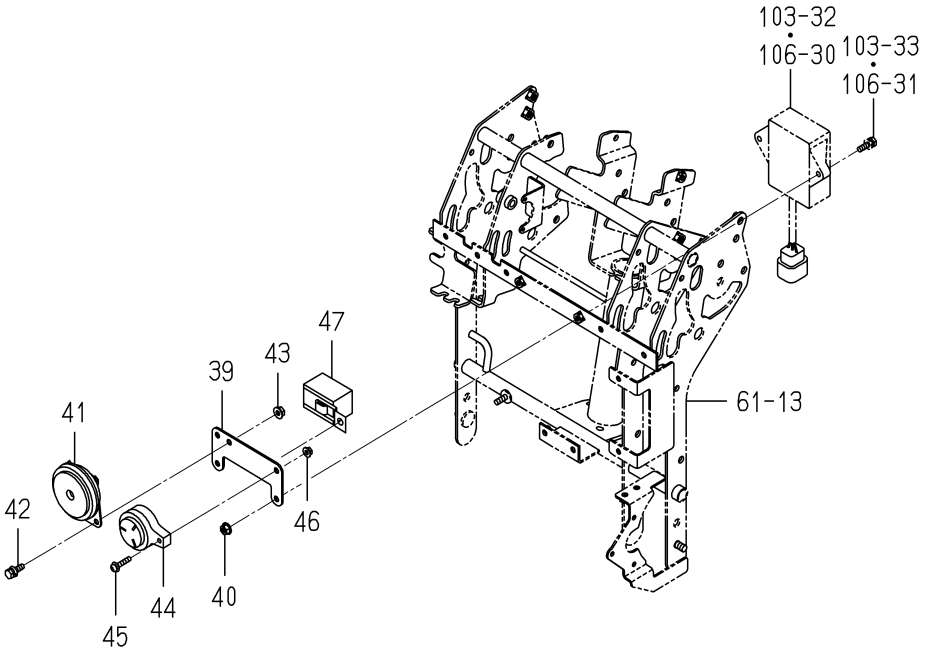

2232-536L-0100

KEY	PART CODE	DESCRIPTION	SPC	TYPE OF MODEL NP60E16		ITC	COL	GRP	REMARKS
31	2232-536-006-00	COVER/COLUMN/LOWER/N	*	1					
32	2232-536-011-00	CAP/COVER/COLUMN/NP	*	1					
33	3843-271-210-10	SWITCH/COMBINATION	*	1					
34	2144-542-220-00	SWITCH,SAFETY ASSY	*	1					
35	1491-623-222-00	NUT/M20	*	2					
36	1491-623-223-00	BOOT	*	1					
37	2151-810-004-10	CORRUGATED TUBE/07X1	*	1					
38	2515-665-210-00	BUZZER	*	1					
39	2232-536-012-10	PLATE/SWITCH/E16/NP	*	1					
40	V360-260-006-00	NUT/WASHER/M6	*	2					
41	1740-680-530-20	HORN ASSY	*	1					
42	V210-360-601-60	BOLT,SP/M6X16	*	2					
43	V360-260-006-00	NUT/WASHER/M6	*	2					
44	2204-542-200-00	BUZZERASSY	*	1					
45	V120-365-002-50	SCREW,SP/M5X25	*	1					
46	V360-260-005-00	NUT/WASHER/M5	*	1					
47	1650-652-390-00	RELAY/FLASHER ASSY	*	1					

FIG.102 PANEL(INSTRUMENT)SYSTEM(DR TYPE)(1/2)

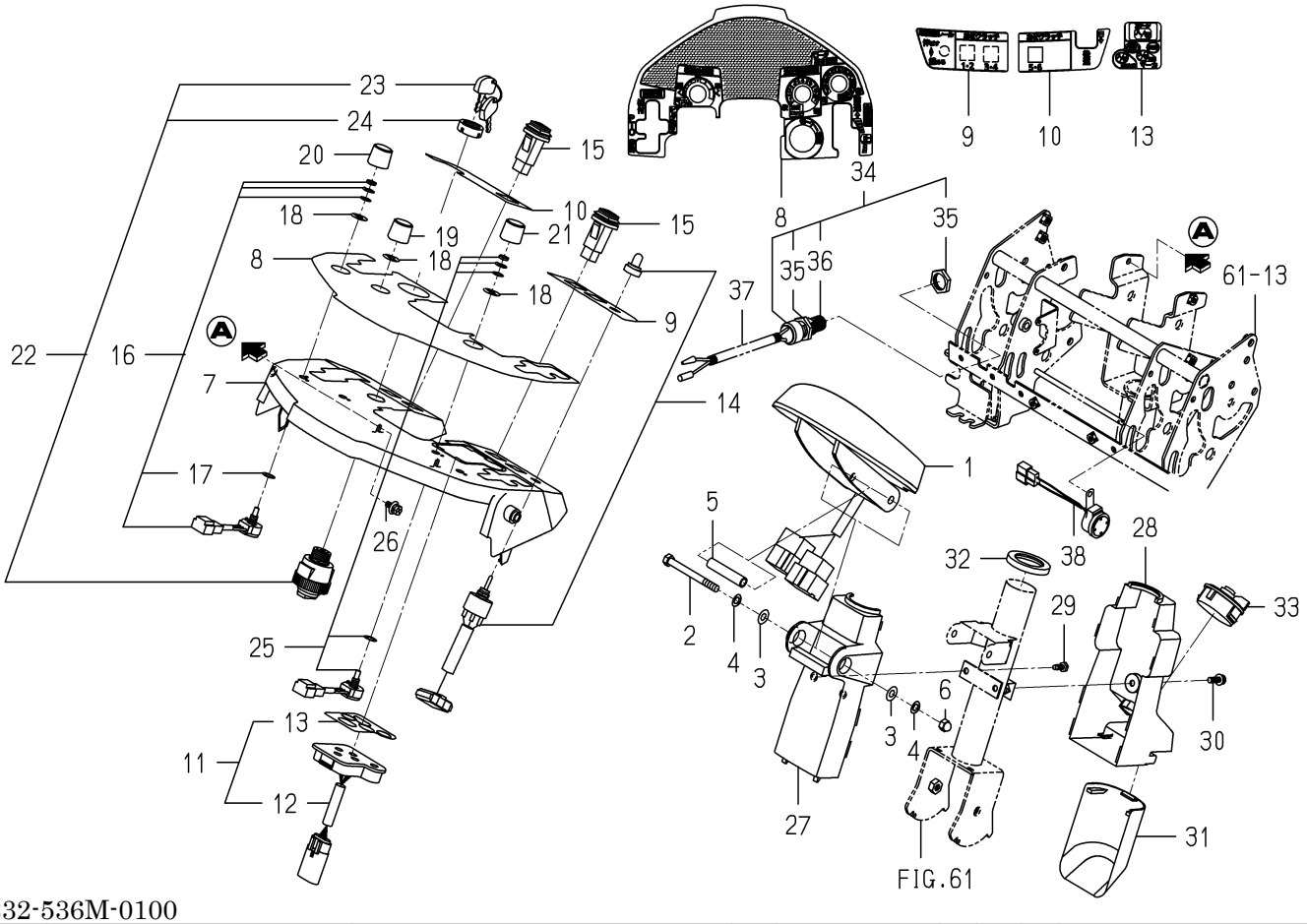

2232-536M-0100

KEY	PART CODE	DESCRIPTION	SPC	TYPE OF MODEL NP60E16		ITC	COL	GRP	REMARKS
1	2232-536-300-10	PANEL/MONITOR/NP/E16	*	1					
2	V201-260-808-00	BOLT/M8X80	*	1					
3	V411-260-008-00	WASHER,PL/M8	*	2					
4	3533-306-001-00	SPAC/M8	*	2					
5	2232-536-007-00	COLLAR/09X12X57	*	1					
6	2232-536-008-00	UNUT/M8/CAP	*	1					
7	2232-536-003-10	PANEL/HOOD/NP	*	1					
8	2232-912-042-00	LABEL/PANEL/MAIN/6D/	*	1					
9	2232-912-049-00	LABEL/PANEL/LH/6/N/E	*	1					
10	2232-912-044-00	LABEL/PANEL/RH/6/E16	*	1					
11	2232-536-330-00	SWITCH/CONTROLLER/E1	*	1					
12	2232-536-250-00	SWITCH/CONTROLLER/NP	*	1					
13	2232-912-045-00	LABEL/TACT/SWITCH/E1	*	1					
14	2204-530-300-00	SWITCH/POWER TRAIN S	*	1					
15	2512-665-220-00	SWITCH/MOMENTARY/G/W	*	3					
16	1729-609-240-00	SWITCH/VR ASSY	*	2					
17	1675-695-005-00	INSULATOR	*	2					
18	3652-273-002-00	SORING	*	3					
19	2204-536-551-00	KNOB/HYDRAULIC SENSI	*	1					
20	3849-270-402-00	KNOB/BL	*	1					
21	3849-270-403-00	KNOB/GR	*	1					
22	1716-680-200-20	SWITCH/MAIN ASSY	*	1					
23	2186-536-211-00	KEY	*	2					
24	2186-536-212-00	NUT/RING	*	1					
25	2232-536-290-00	SWITCH/VR/NP ASSY	*	1					
26	2144-501-011-10	BOLT/M6X16X16	*	2					
27	2232-536-001-10	COVER/COLUMN/FRONT/N	*	1					
28	2232-536-002-00	COVER/COLUMN/REAR/NP	*	1					
29	2161-506-005-00	SCREW/TAPPING/6X16	*	2					
30	V120-366-001-60	SCREW,SP/M6X16	*	1					

FIG.102 PANEL(INSTRUMENT)SYSTEM(DR TYPE)(2/2)

31~37-PLEASE SEE 1/2 PAGE

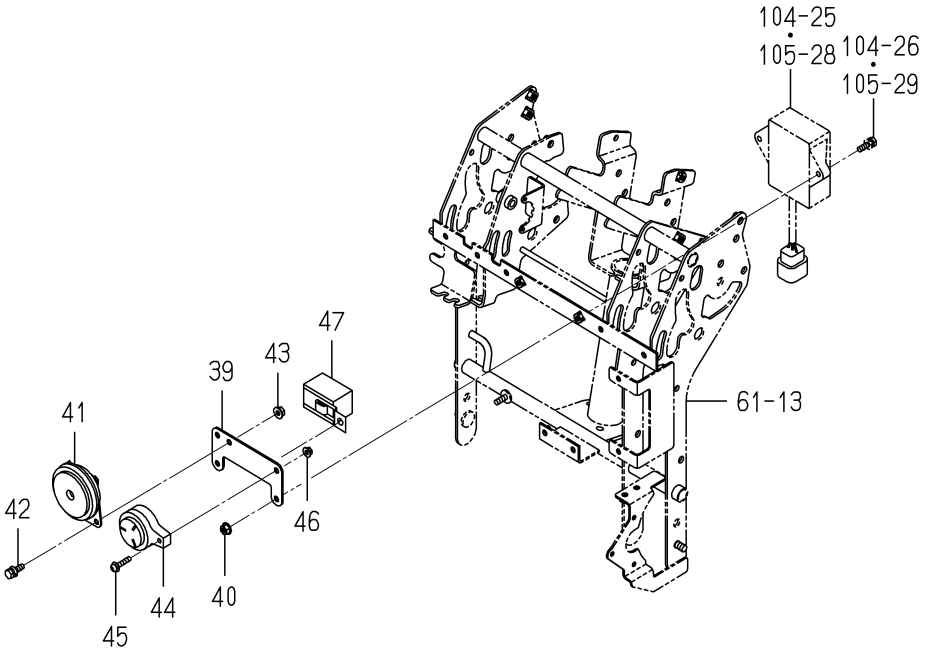

2232-536M-0100

KEY	PART CODE	DESCRIPTION	SPC	TYPE OF MODEL NP60E16		ITC	COL	GRP	REMARKS
31	2232-536-006-00	COVER/COLUMN/LOWER/N	*	1					
32	2232-536-011-00	CAP/COVER/COLUMN/NP	*	1					
33	3843-271-210-10	SWITCH/COMBINATION	*	1					
34	2144-542-220-00	SWITCH,SAFETY ASSY	*	1					
35	1491-623-222-00	NUT/M20	*	2					
36	1491-623-223-00	BOOT	*	1					
37	2151-810-004-10	CORRUGATED TUBE/07X1	*	1					
38	2515-665-210-00	BUZZER	*	1					
39	2232-536-012-10	PLATE/SWITCH/E16/NP	*	1					
40	V360-260-006-00	NUT/WASHER/M6	*	2					
41	1740-680-530-20	HORN ASSY	*	1					
42	V210-360-601-60	BOLT,SP/M6X16	*	2					
43	V360-260-006-00	NUT/WASHER/M6	*	2					
44	2204-542-200-00	BUZZERASSY	*	1					
45	V120-365-002-50	SCREW,SP/M5X25	*	1					
46	V360-260-005-00	NUT/WASHER/M5	*	1					
47	1650-652-390-00	RELAY/FLASHER ASSY	*	1					

FIG.103 HARNESS(TRAVELING SECTION)SYSTEM(1/2) (GF TYPE)

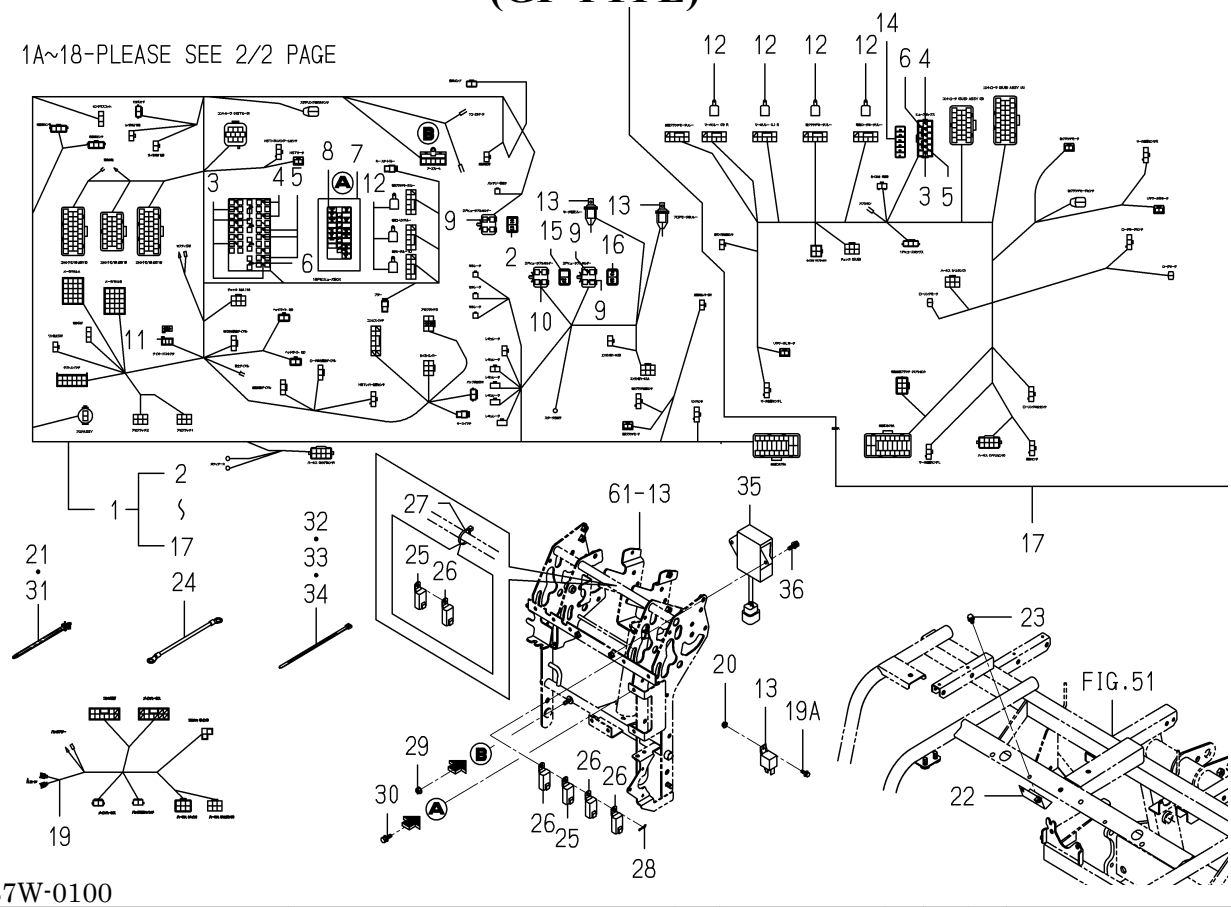

2232-537W-0100

KEY	PART CODE	DESCRIPTION	SPC	TYPE OF MODEL NP60E16		ITC	COL	GRP	REMARKS
1	2232-537-200-40	HARNESS/MAIN/6G ASSY	*	1 -60					
1A	2232-537-900-10	HARNESS/MAIN/6GF/E16	*	1 -630		1			
1B	2232-537-900-30	HARNESS/MAIN/6GF/E16	*	1 631-		1			
2	2204-538-211-00	LABEL/FUSE/MAIN/M	*	1 -60					
2A	2204-537-501-00	LABEL/FUSE	*	1 61-					
3	3824-247-202-00	FUSE/BLADE/32V05A	*	5 61-					
4	3821-262-202-00	FUSE/BLADE/32V10A	*	7					
5	3821-262-204-00	FUSE/BLADE/32V20A	*	8 -60					
5A	3821-262-204-00	FUSE/BLADE/32V20A	*	10 61-					
6	3827-270-203-00	FUSE/BLADE/32V25A	*	4 -60					
7	2204-537-202-00	CAP/FUSE BOX	*	1					
8	2232-537-203-10	ORNAMENT/FUSE/MAIN/G	*	1 -60					
8A	2232-537-903-00	ORNAMENT/FUSE/MAIN/6	*	1 61-					
9	1650-650-222-00	FUSE/SLOW BLOW/40A	*	3 -60					
9A	1650-650-222-00	FUSE/SLOW BLOW/40A	*	2 61-					
10	1650-650-243-00	FUSE/SLOW BLOW/60A	*	1					
11	3650-261-221-00	DIODE/1.5A-3P ASSY	*	1 -60					
12	3841-277-300-00	RELAY,TWIN	*	7 -60					
12A	3841-277-300-00	RELAY,TWIN	*	6 -630					
12B	3841-277-300-10	RELAY/TWIN	*	6 631-		1			
13	1719-650-250-00	RELAY ASSY	*	2 61-					
14	2232-537-204-00	ORNAMENT/FUSE/REAR	*	1 -60					
14A	2232-537-904-00	ORNAMENT/FUSE/REAR/E	*	1 61-					
15	2232-537-201-10	LABEL/FUSE/REAR/MOTO	*	1 -60					
15A	2232-537-901-00	LABEL/FUSE/MOTOR/R/E	*	1 61-					
16	8841-511-201-00	LABEL/SLOW BLOW	*	1 -60					
16A	2190-916-011-00	LABEL/SLOWBLOW/8FK	*	1 61-					
17	2232-537-220-20	HARNESS/REAR/6F ASSY	*	1 -60					
17A	2232-537-920-00	HARNESS/REAR/6FE16	*	1 -630					
17B	2232-537-920-20	HARNESS/REAR/6FE16	*	1 631-		1			

FIG.103 HARNESS(TRAVELING SECTION)SYSTEM(2/2) (GF TYPE)

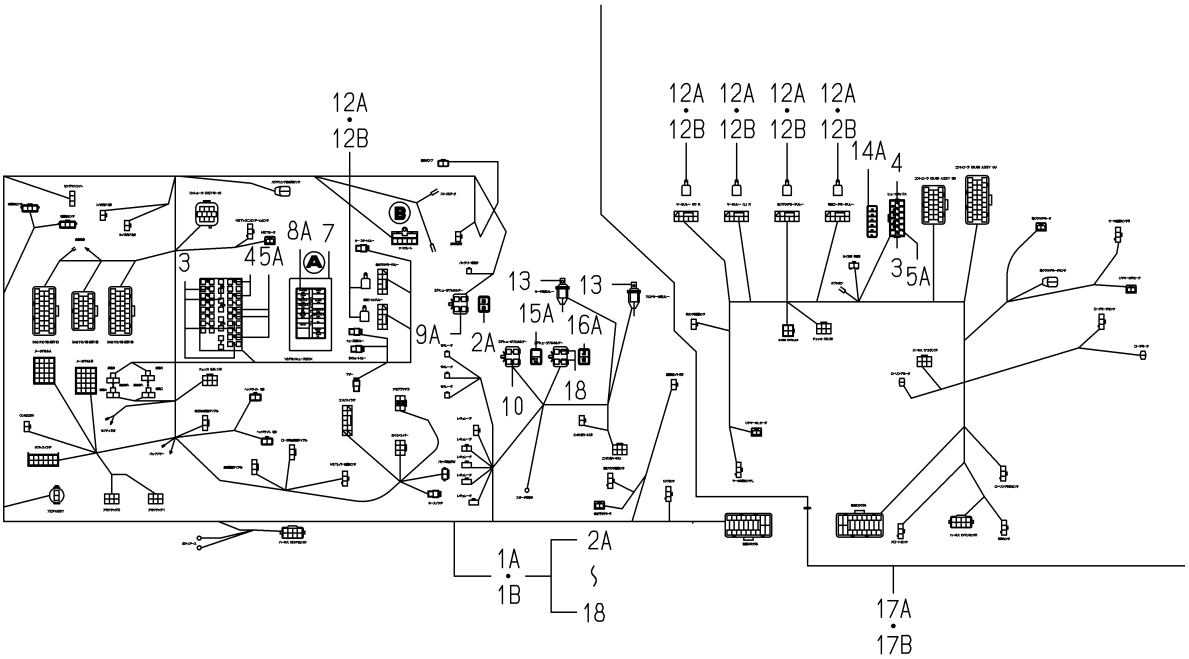

2232-537W-0100

KEY	PART CODE	DESCRIPTION	SPC	TYPE OF MODEL NP60E16		ITC	COL	GRP	REMARKS
18	1614-690-202-00	FUSE/SLOW BLOW/50A	*	2 61-					
19	2232-537-960-00	HARNESS/E16	*	1 -60					
19A	2505-111-003-00	BOLT/SP	*	2 61-					
20	V360-260-005-00	NUT/WASHER/M5	*	2					
21	2204-537-002-00	BAND	*	20					
22	2232-537-240-00	STAY/FUSEBOX COMP	*	1					
23	V210-360-601-60	BOLT,SP/M6X16	*	1					
24	1544-623-008-10	HARNESS,WIRE/NO.8	*	1					
25	1690-652-210-00	RELAY ASSY	*	2					
26	1650-658-270-00	RELAY/4P ASSY	*	4					
27	2212-581-009-00	HARNESSBAND/202	*	1					
28	2161-735-005-00	PIN	*	1					
29	V360-260-006-00	NUT/WASHER/M6	*	1					
30	V210-360-602-00	BOLT,SP/M6X20	*	2					
31	2204-537-002-00	BAND	*	4					
32	1376-402-003-00	BAND,WIRE/140	*	5					
33	1342-402-006-00	BAND,WIRE/250	*	2					
34	2212-581-009-00	HARNESSBAND/202	*	1					
35	1754-640-230-10	CONTROLLER/MOTO ASSY	*	1					
36	V210-360-602-00	BOLT,SP/M6X20	*	2					

FIG.104 HARNESS(TRAVELING SECTION)SYSTEM (D TYPE EXCEPT F)

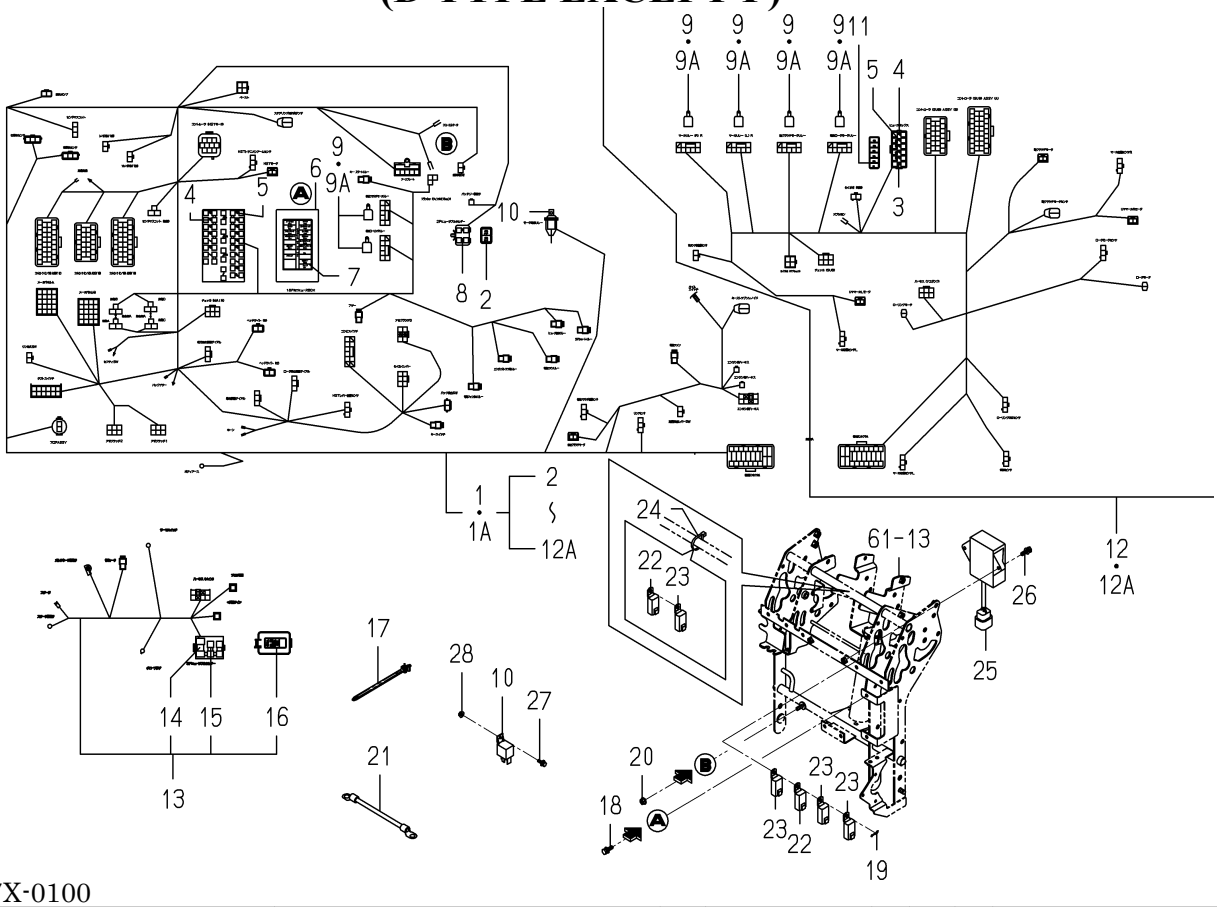

2232-537X-0100

KEY	PART CODE	DESCRIPTION	SPC	TYPE OF MODEL NP60E16		ITC	COL	GRP	REMARKS
1	2232-537-640-10	HARNESS/MAIN/6D/E16	*	1 -630					
1A	2232-537-640-30	HARNESS/MAIN/6D/E16	*	1 631-		1			
2	2204-537-501-00	LABEL/FUSE	*	1					
3	3824-247-202-00	FUSE/BLADE/32V05A	*	5					
4	3821-262-202-00	FUSE/BLADE/32V10A	*	8					
5	3821-262-204-00	FUSE/BLADE/32V20A	*	10					
6	2204-537-202-00	CAP/FUSE BOX	*	1					
7	2232-537-931-10	ORNAMENT/FUSE/MAIN/6	*	1					
8	1650-650-222-00	FUSE/SLOW BLOW/40A	*	2					
9	3841-277-300-00	RELAY,TWIN	*	6 -630					
9A	3841-277-300-10	RELAY/TWIN	*	6 631-		1			
10	1719-650-250-00	RELAY ASSY	*	1					
11	2232-537-904-00	ORNAMENT/FUSE/REAR/E	*	1					
12	2232-537-630-00	HARNESS/REAR/6/E16	*	1 -630					
12A	2232-537-630-20	HARNESS/REAR/6/E16	*	1 631-		1			
13	2232-537-660-00	HARNESS/ENGINE/D/E16	*	1					
14	3829-260-303-00	FUSE/SLOW BLOW/60A	*	1					
15	1614-690-202-00	FUSE/SLOW BLOW/50A	*	1					
16	2232-537-661-00	LABEL/FUSE/ENGINE/K	*	1					
17	2204-537-002-00	BAND	*	20					
18	V210-360-602-00	BOLT,SP/M6X20	*	2					
19	2161-735-005-00	PIN	*	1					
20	V360-260-006-00	NUT/WASHER/M6	*	1					
21	3623-263-001-00	WIRE,LEAD	*	1					
22	1690-652-210-00	RELAY ASSY	*	2					
23	1650-658-270-00	RELAY/4P ASSY	*	4					
24	2212-581-009-00	HARNESSBAND/202	*	1					
25	1754-640-230-10	CONTROLLER/MOTO ASSY	*	1					
26	V210-360-602-00	BOLT,SP/M6X20	*	2					
27	2505-111-003-00	BOLT/SP	*	1					

FIG.104 HARNESS(TRAVELING SECTION)SYSTEM (D TYPE EXCEPT F)

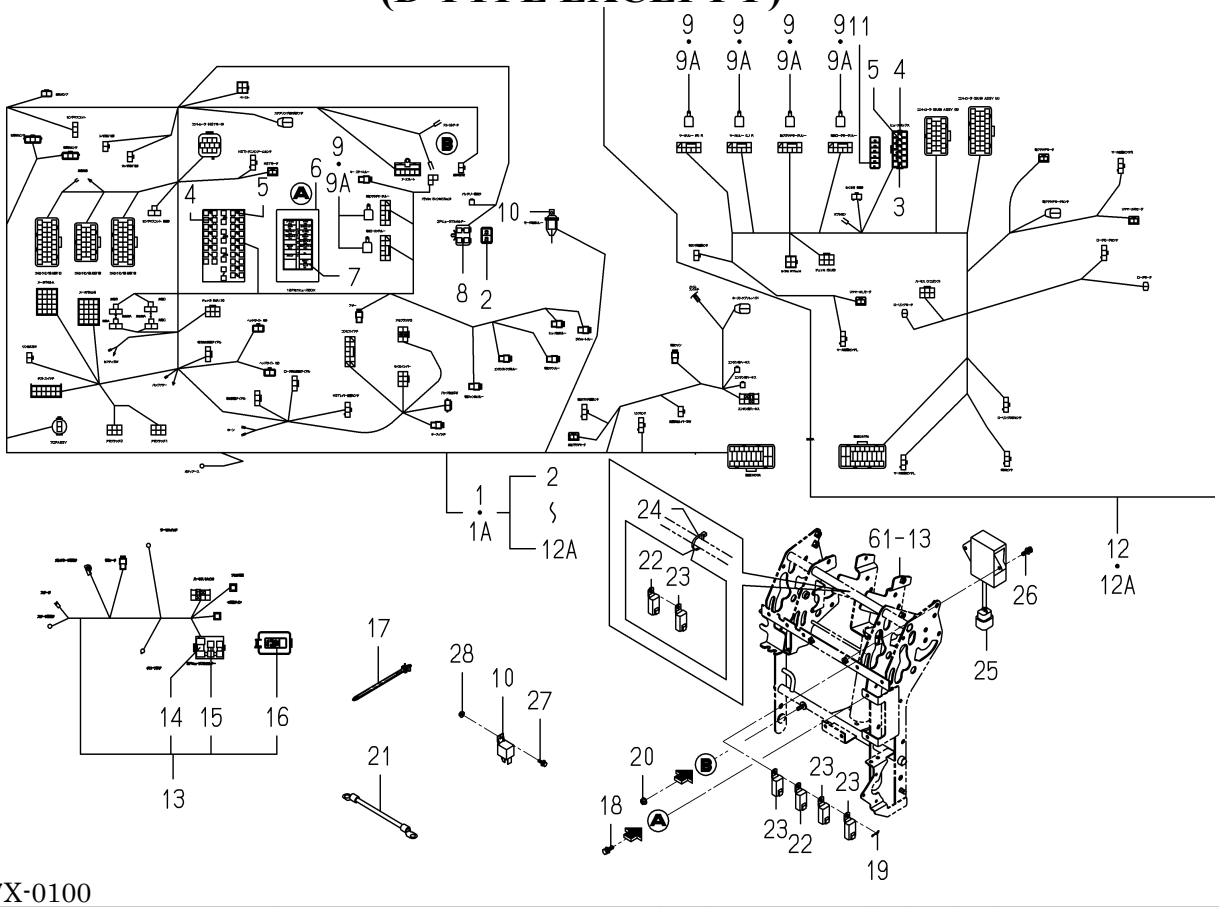

2232-537X-0100

KEY	PART CODE	DESCRIPTION	SPC	TYPE OF MODEL NP60E16		ITC	COL	GRP	REMARKS
28	V360-260-005-00	NUT/WASHER/M5	*	1					

FIG.105 HARNESS(TRAVELING SECTION)SYSTEM(1/2) (DF TYPE)

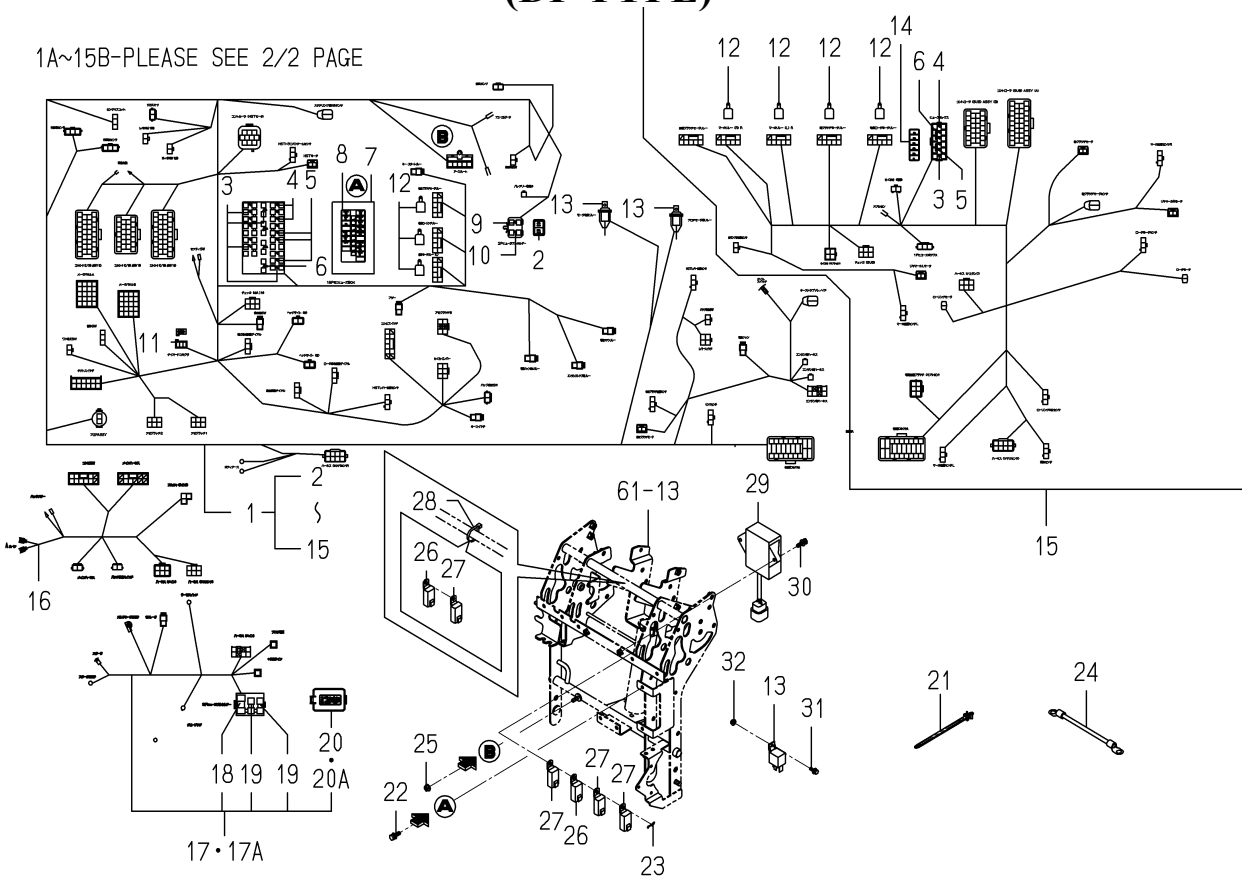

2232-537Y-0100

KEY	PART CODE	DESCRIPTION	SPC	TYPE OF MODEL NP60E16		ITC	COL	GRP	REMARKS
1	2232-537-700-00	HARNESS/MAIN/6D ASSY	*	1 -60					
1A	2232-537-930-10	HARNESS/MAIN/6DF/E16	*	1 -629		1			
1B	2232-537-930-30	HARNESS/MAIN/6DF/E16	*	1 630-		1			
2	2204-538-211-00	LABEL/FUSE/MAIN/M	*	1 -60					
2A	2204-537-501-00	LABEL/FUSE	*	1 61-					
3	3824-247-202-00	FUSE/BLADE/32V05A	*	6 -60					
3A	3824-247-202-00	FUSE/BLADE/32V05A	*	5					
4	3821-262-202-00	FUSE/BLADE/32V10A	*	8					
5	3821-262-204-00	FUSE/BLADE/32V20A	*	8 -60					
5A	3821-262-204-00	FUSE/BLADE/32V20A	*	10 61-					
6	3824-247-203-00	FUSE,BLADE/32	*	4 -60					
7	2204-537-202-00	CAP/FUSE BOX	*	1					
8	2232-538-211-00	ORNAMENT/FUSE/7D	*	1 -60					
8A	2232-537-931-10	ORNAMENT/FUSE/MAIN/6	*	1 61-					
9	1650-650-222-00	FUSE/SLOW BLOW/40A	*	1 -60					
9A	1650-650-222-00	FUSE/SLOW BLOW/40A	*	2 61-					
10	1650-650-243-00	FUSE/SLOW BLOW/60A	*	1 -60					
11	3650-261-221-00	DIODE/1.5A-3P ASSY	*	1					
12	3841-277-300-00	RELAY,TWIN	*	7 -60					
12A	3841-277-300-00	RELAY,TWIN	*	6 -630					
12B	3841-277-300-10	RELAY/TWIN	*	6 631-		1			
13	1719-650-250-00	RELAY ASSY	*	2					
14	2232-537-204-00	ORNAMENT/FUSE/REAR	*	1 -60					
14A	2232-537-904-00	ORNAMENT/FUSE/REAR/E	*	1 61-					
15	2232-537-220-20	HARNESS/REAR/6F ASSY	*	1 -60					
15A	2232-537-920-00	HARNESS/REAR/6FE16	*	1 -630					
15B	2232-537-920-20	HARNESS/REAR/6FE16	*	1 631-		1			
16	2232-537-960-00	HARNESS/E16	*	1 -60					
17	2233-537-230-00	HARNESS/ENGINE/DF	*	1 -60					
17A	2232-537-950-00	HARNESS/ENGINE/DFE16	*	1 61-					

FIG.105 HARNESS(TRAVELING SECTION)SYSTEM(2/2) (DF TYPE)

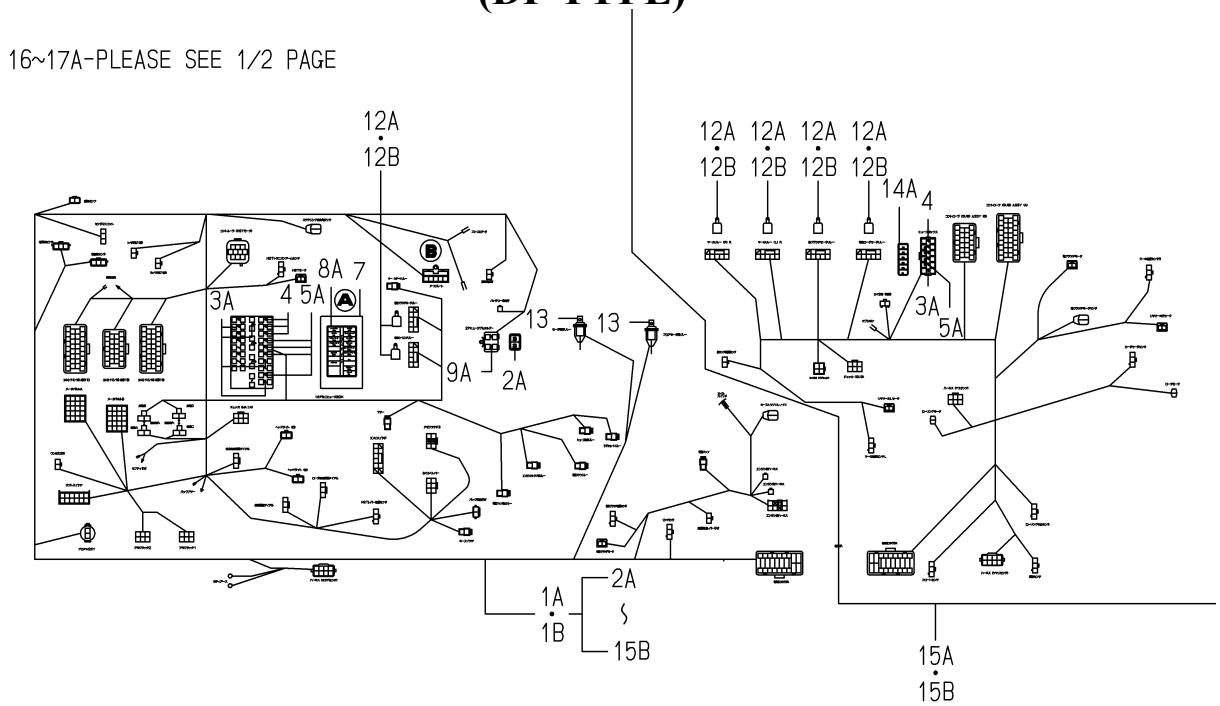

2232-537Y-0100

KEY	PART CODE	DESCRIPTION	SPC	TYPE OF MODEL NP60E16		ITC	COL	GRP	REMARKS
18	3829-260-303-00	FUSE/SLOW BLOW/60A	*	1					
19	1614-690-202-00	FUSE/SLOW BLOW/50A	*	2					
20	2233-537-231-00	LABEL/FUSE/ENGINE/DF	*	1 -60					
20A	2232-537-951-00	LABEL/FUSE/ENGINE/KF	*	1 61-					
21	2204-537-002-00	BAND	*	20					
22	V210-360-602-00	BOLT,SP/M6X20	*	2					
23	2161-735-005-00	PIN	*	1					
24	V360-260-006-00	NUT/WASHER/M6	*	1					
25	3623-263-001-00	WIRE,LEAD	*	1					
26	1690-652-210-00	RELAY ASSY	*	2					
27	1650-658-270-00	RELAY/4P ASSY	*	4					
28	2212-581-009-00	HARNESSBAND/202	*	1					
29	1754-640-230-10	CONTROLLER/MOTO ASSY	*	1					
30	V210-360-602-00	BOLT,SP/M6X20	*	2					
31	2505-111-003-00	BOLT/SP	*	2					
32	V360-260-005-00	NUT/WASHER/M5	*	2					

FIG.106 HARNESS(TRAVELING SECTION)SYSTEM (G TYPE EXCEPT F)

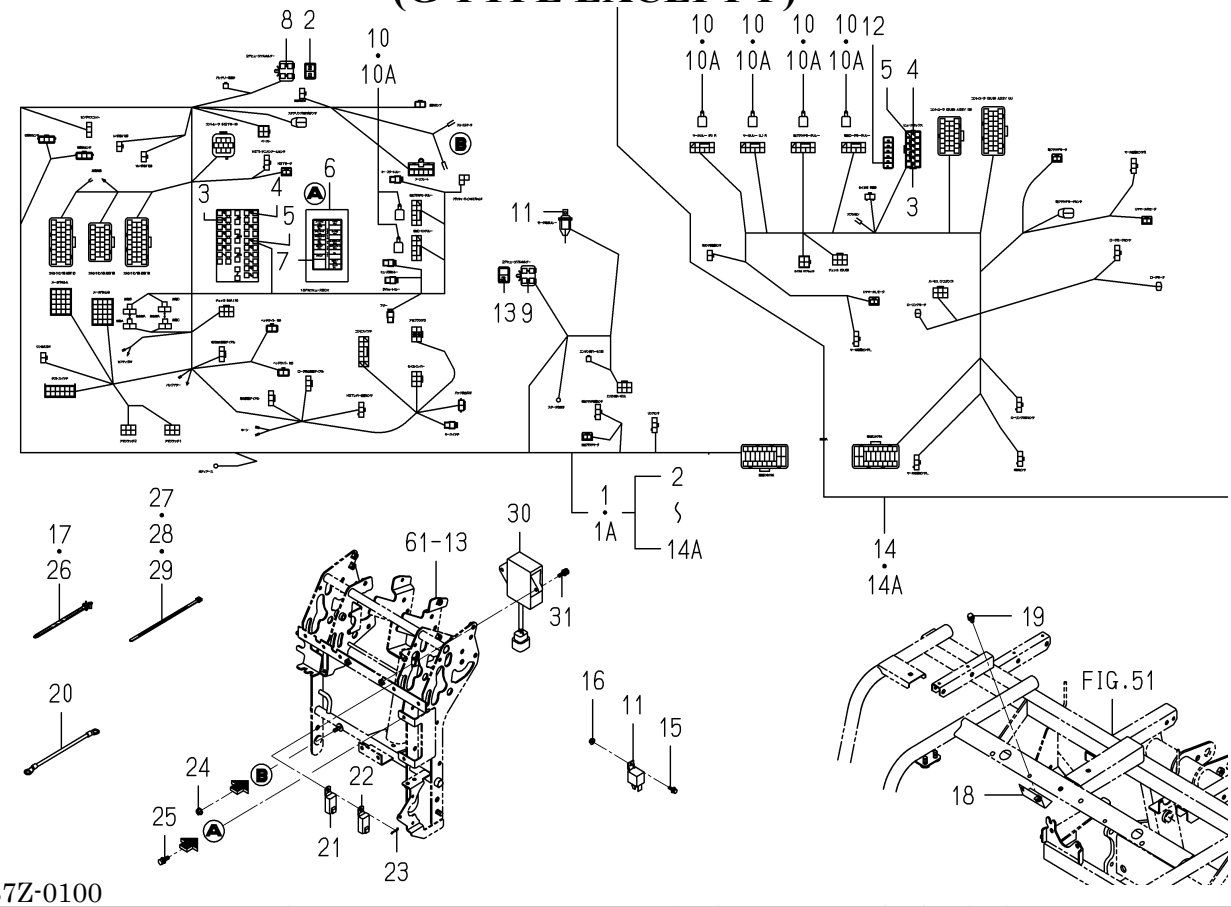

2232-537Z-0100

KEY	PART CODE	DESCRIPTION	SPC	TYPE OF MODEL NP60E16		ITC	COL	GRP	REMARKS
1	2232-537-610-10	HARNESS/MAIN/6G/E16	*	1 -630					
1A	2232-537-610-30	HARNESS/MAIN/6G/E16	*	1 631-		1			
2	2204-537-501-00	LABEL/FUSE	*	1					
3	3824-247-202-00	FUSE/BLADE/32V05A	*	5					
4	3821-262-202-00	FUSE/BLADE/32V10A	*	7					
5	3821-262-204-00	FUSE/BLADE/32V20A	*	10					
6	2204-537-202-00	CAP/FUSE BOX	*	1					
7	2232-537-903-10	ORNAMENT/FUSE/MAIN/6	*	1					
8	1650-650-222-00	FUSE/SLOW BLOW/40A	*	2					
9	1650-650-243-00	FUSE/SLOW BLOW/60A	*	1					
10	3841-277-300-00	RELAY,TWIN	*	6 -630					
10A	3841-277-300-10	RELAY/TWIN	*	6 631-		1			
11	1719-650-250-00	RELAY ASSY	*	1					
12	2232-537-904-00	ORNAMENT/FUSE/REAR/E	*	1					
13	2232-537-901-00	LABEL/FUSE/MOTOR/R/E	*	1					
14	2232-537-630-00	HARNESS/REAR/6/E16	*	1 -630					
14A	2232-537-630-20	HARNESS/REAR/6/E16	*	1 631-		1			
15	2505-111-003-00	BOLT/SP	*	1					
16	V360-260-005-00	NUT/WASHER/M5	*	1					
17	2204-537-002-00	BAND	*	20					
18	2232-537-240-00	STAY/FUSEBOX COMP	*	1					
19	V210-360-601-60	BOLT,SP/M6X16	*	1					
20	1544-623-008-10	HARNESS,WIRE/NO.8	*	1					
21	1690-652-210-00	RELAY ASSY	*	1					
22	1650-658-270-00	RELAY/4P ASSY	*	2					
23	2161-735-005-00	PIN	*	1					
24	V360-260-006-00	NUT/WASHER/M6	*	1					
25	V210-360-602-00	BOLT,SP/M6X20	*	2					
26	2204-537-002-00	BAND	*	4					
27	1376-402-003-00	BAND,WIRE/140	*	5					

FIG.106 HARNESS(TRAVELING SECTION)SYSTEM (G TYPE EXCEPT F)

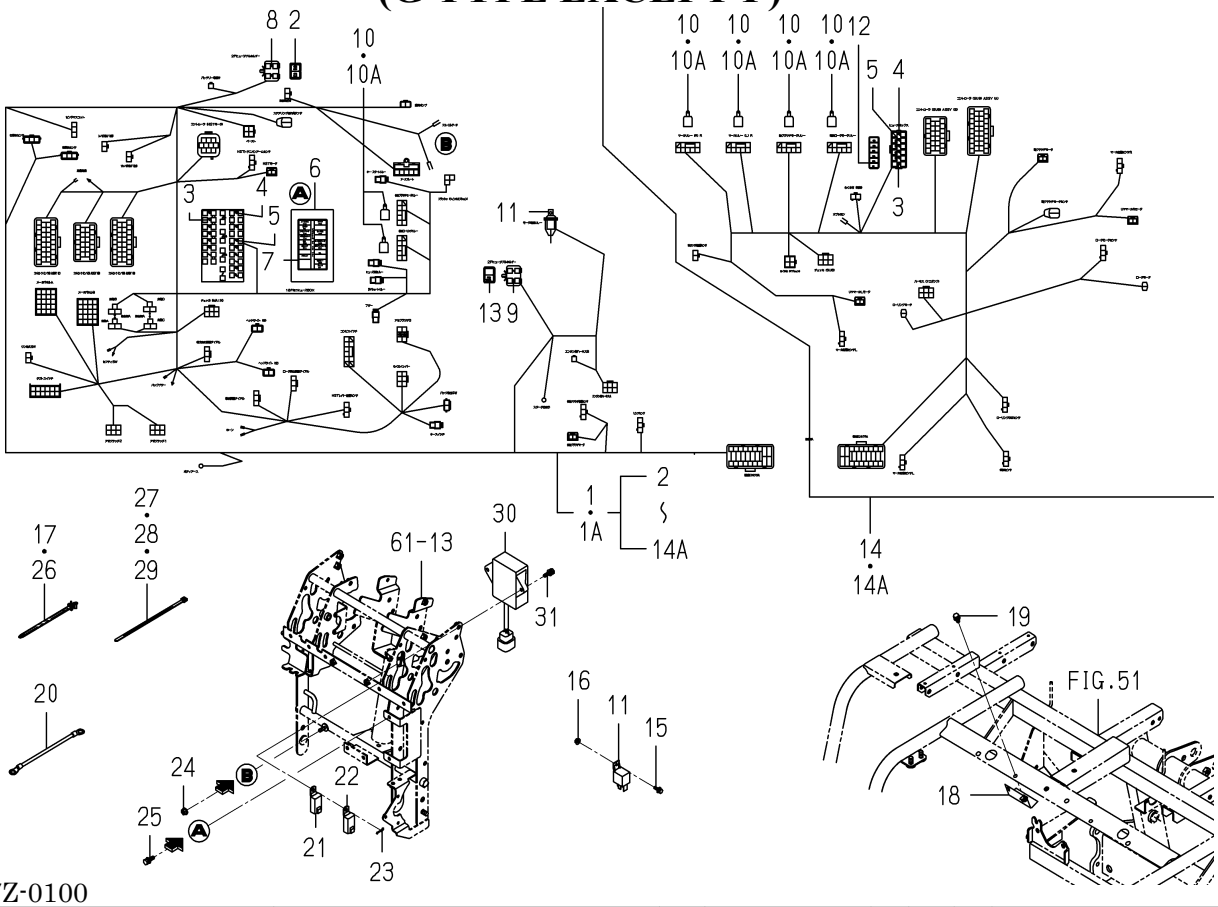

2232-537Z-0100

KEY	PART CODE	DESCRIPTION	SPC	TYPE OF MODEL NP60E16		ITC	COL	GRP	REMARKS
28	1342-402-006-00	BAND,WIRE/250	*	2					
29	2212-581-009-00	HARNESSBAND/202	*	1					
30	1754-640-230-10	CONTROLLER/MOTO ASSY	*	1					
31	V210-360-602-00	BOLT,SP/M6X20	*	2					

FIG.107 HARNESS(PLANTING SECTION)SYSTEM

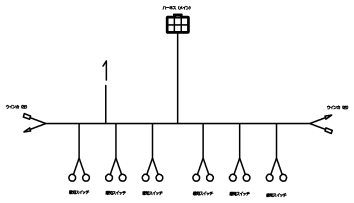

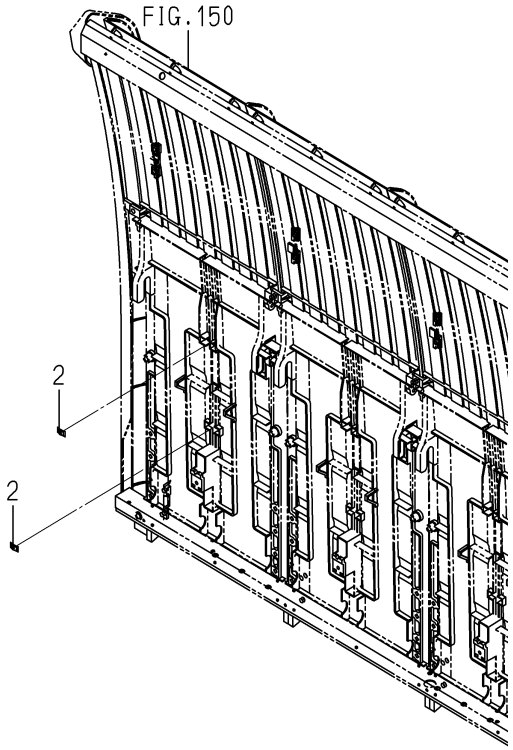

2232-539 -0100

KEY	PART CODE	DESCRIPTION	SPC	TYPE OF MODEL NP60E16		ITC	COL	GRP	REMARKS
1	2204-539-200-30	HARNESS/SEEDLING TAN	*	1					
2	V350-160-004-00	NUT,SPEED/M4	*	12					

FIG.108 BATTERY SYSTEM(G TYPE)

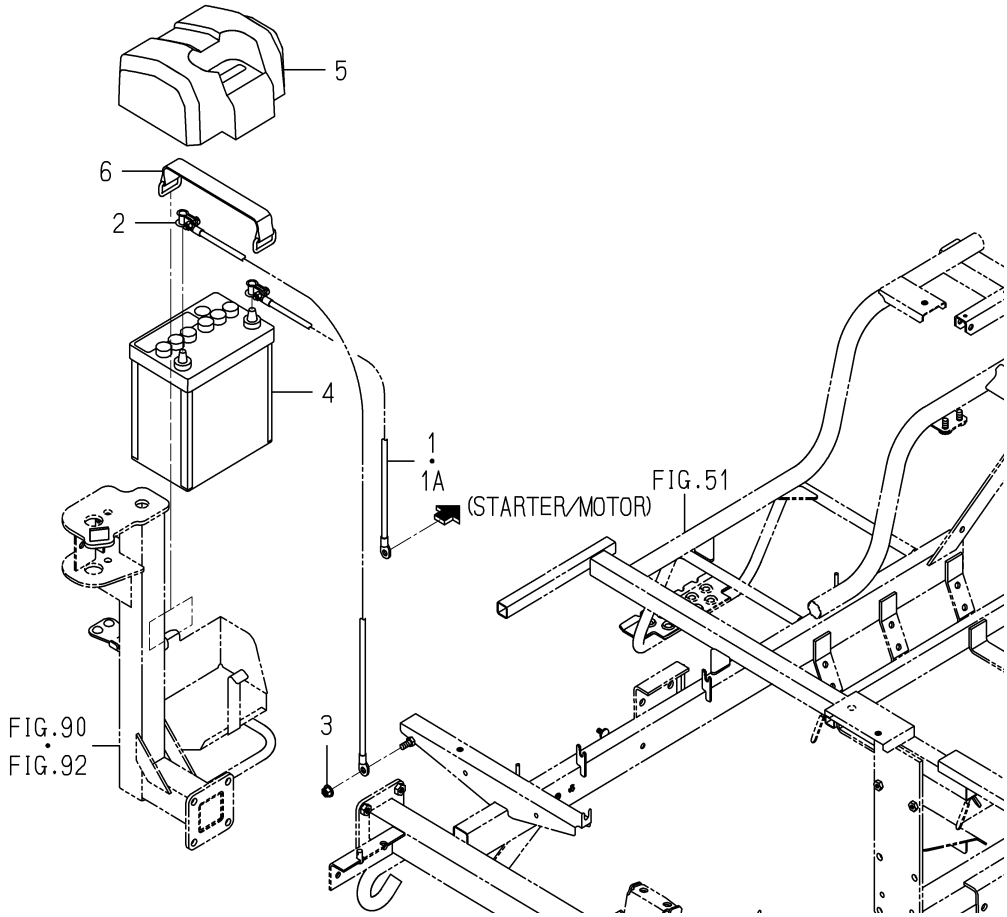

2232-541 -0100

KEY	PART CODE	DESCRIPTION	SPC	TYPE OF MODEL NP60E16		ITC	COL	GRP	REMARKS
1	2232-541-200-00	HARNESS/BATTERY/G/NP	*	1 -60					
1A	2232-541-210-00	HARNESS/BATTERY/6G	*	1 61-					
2	2232-541-220-00	HARNESS/BATTERY EART	*	1					
3	V362-260-008-00	NUT/WASHER/M8	*	1					
4	1728-112-250-10	BATTERY/44B19L ASSY	*	1					
5	2232-541-001-00	COVER/BATTERY/NP	*	1					
6	3640-260-200-30	BATTERYSTAY COMP	*	1					

FIG.109 BATTERY SYSTEM(D TYPE)

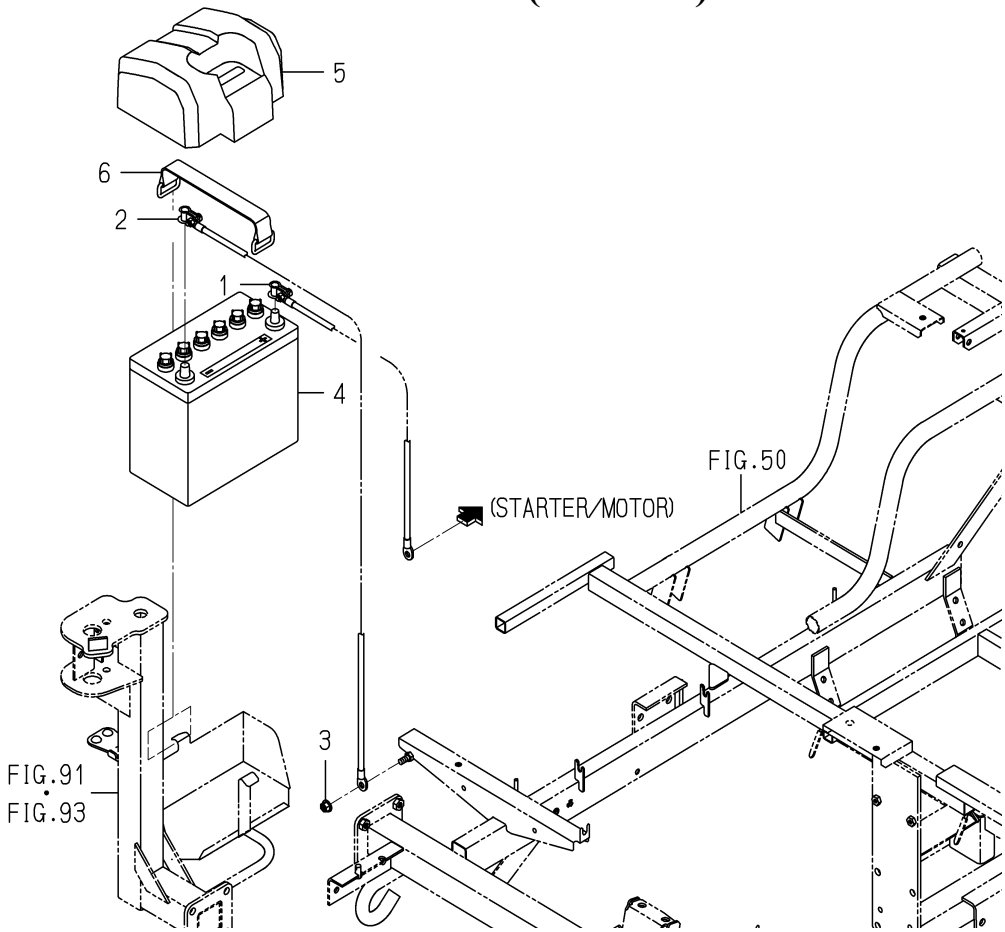

2233-541B-0100

KEY	PART CODE	DESCRIPTION	SPC	TYPE OF MODEL NP60E16		ITC	COL	GRP	REMARKS
1	2233-541-300-00	HARNESS/BATTERY/6D/N	*	1					
2	2232-541-220-00	HARNESS/BATTERY EART	*	1					
3	V362-260-008-00	NUT/WASHER/M8	*	1					
4	3656-260-200-30	BATTERY(55B24L) ASSY	*	1					
5	2233-541-001-00	COVER/BATTERY/D/NP	*	1					
6	3640-260-200-30	BATTERYSTAY COMP	*	1					

FIG.110 CONTROLLER(FRONT)SYSTEM

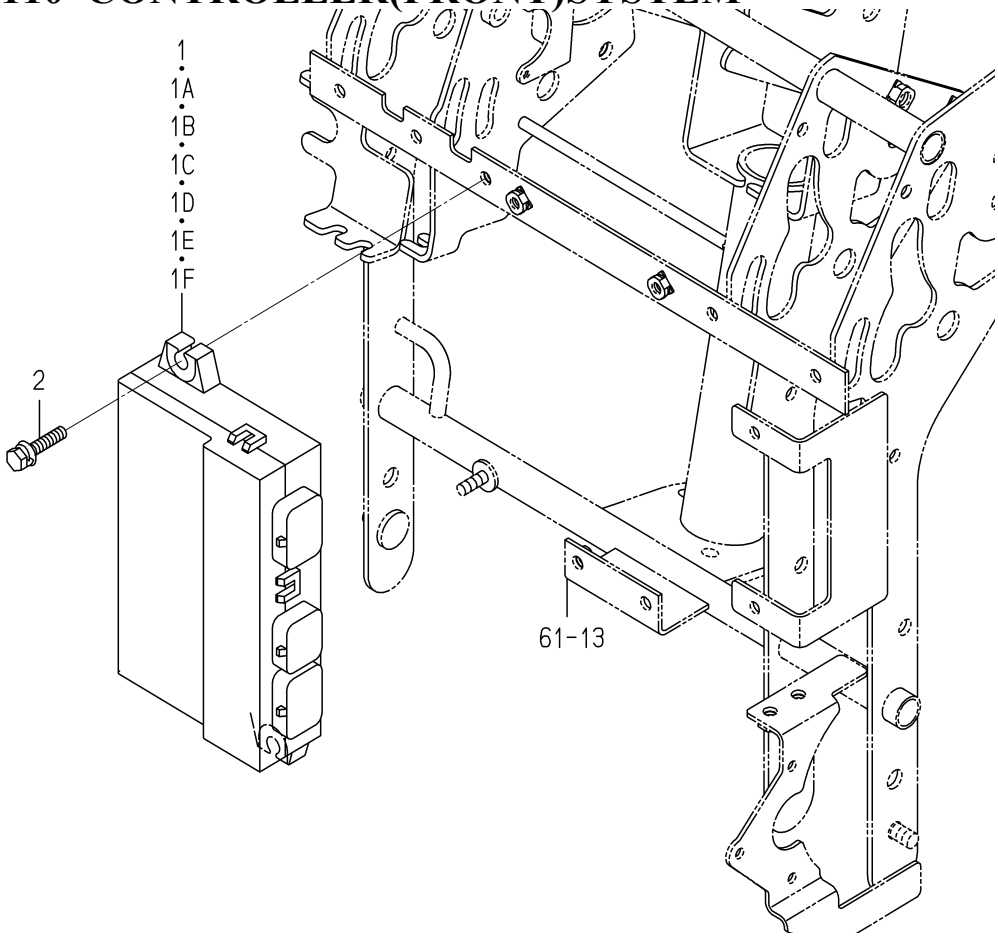

2232-545 -0100

KEY	PART CODE	DESCRIPTION	SPC	TYPE OF MODEL NP60E16		ITC	COL	GRP	REMARKS
1	2232-545-200-70	CONTROLLER/6/FRONT	*	1 -60					
1A	2232-545-210-10	CONTROLLER/6/FRONT	*	1 -141		1			
1B	2232-545-400-00	CONTROLLER/6/FRONT	*	1 -630					
1C	2232-545-400-10	CONTROLLER/6/FRONT	*	1 -632		1			
1D	2232-545-400-20	CONTROLLER/6/FRONT	*	1 -1133		1			
1E	2232-545-400-40	CONTROLLER/6/FRONT	*	1 -1637		1			
1F	2232-545-400-50	CONTROLLER/6/FRONT	*	1 1638-		1			
2	V210-360-603-00	BOLT,SP/M6X30	*	2					

FIG.111 CONTROLLER(REAR)SYSTEM

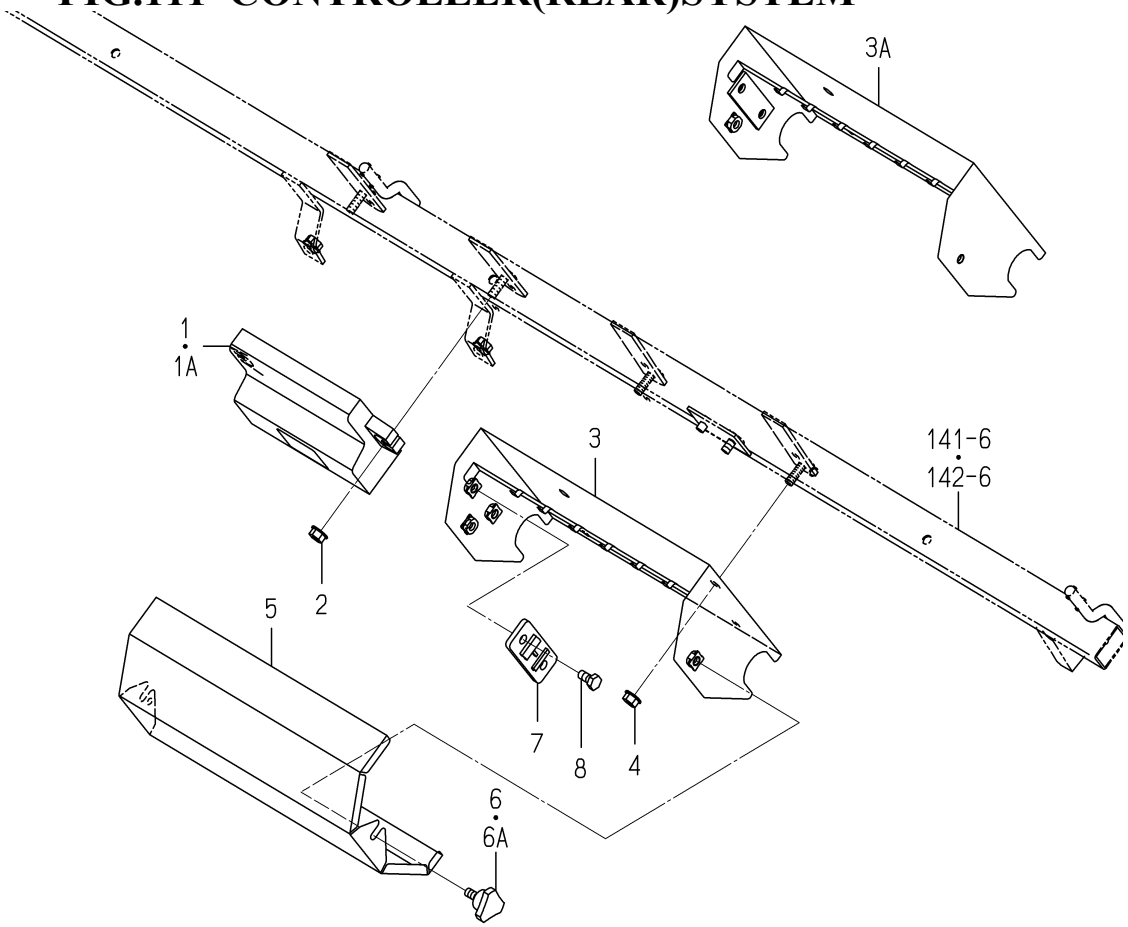

2232-546 -0100

KEY	PART CODE	DESCRIPTION	SPC	TYPE OF MODEL NP60E16		ITC	COL	GRP	REMARKS
1	2232-546-200-20	CONTROLLER/6/REAR	*	1 -141					
1A	2232-546-300-00	CONTROLLER/6/REAR	*	1 142-					
2	V360-260-006-00	NUT/WASHER/M6	*	2					
3	2232-546-210-10	CASE/RELAY COMP	*	1 -1133			6G		
3A	2232-546-210-20	CASE/RELAY COMP	*	1 1134-		1	6G		
4	V360-260-006-00	NUT/WASHER/M6	*	2					
5	2232-546-001-00	COVER/RELAY	*	1					
6	1716-601-003-00	BOLT/KNOB/M06X13	*	2 -630					
6A	1716-601-003-10	BOLT/KNOB/M06X13	*	2 631-		1			
7	3659-836-002-00	BRACKET,FUSE	*	1					
8	V200-260-601-20	BOLT/M6X12	*	2					

FIG.112 CLUTCH(PLANTING)SYSTEM

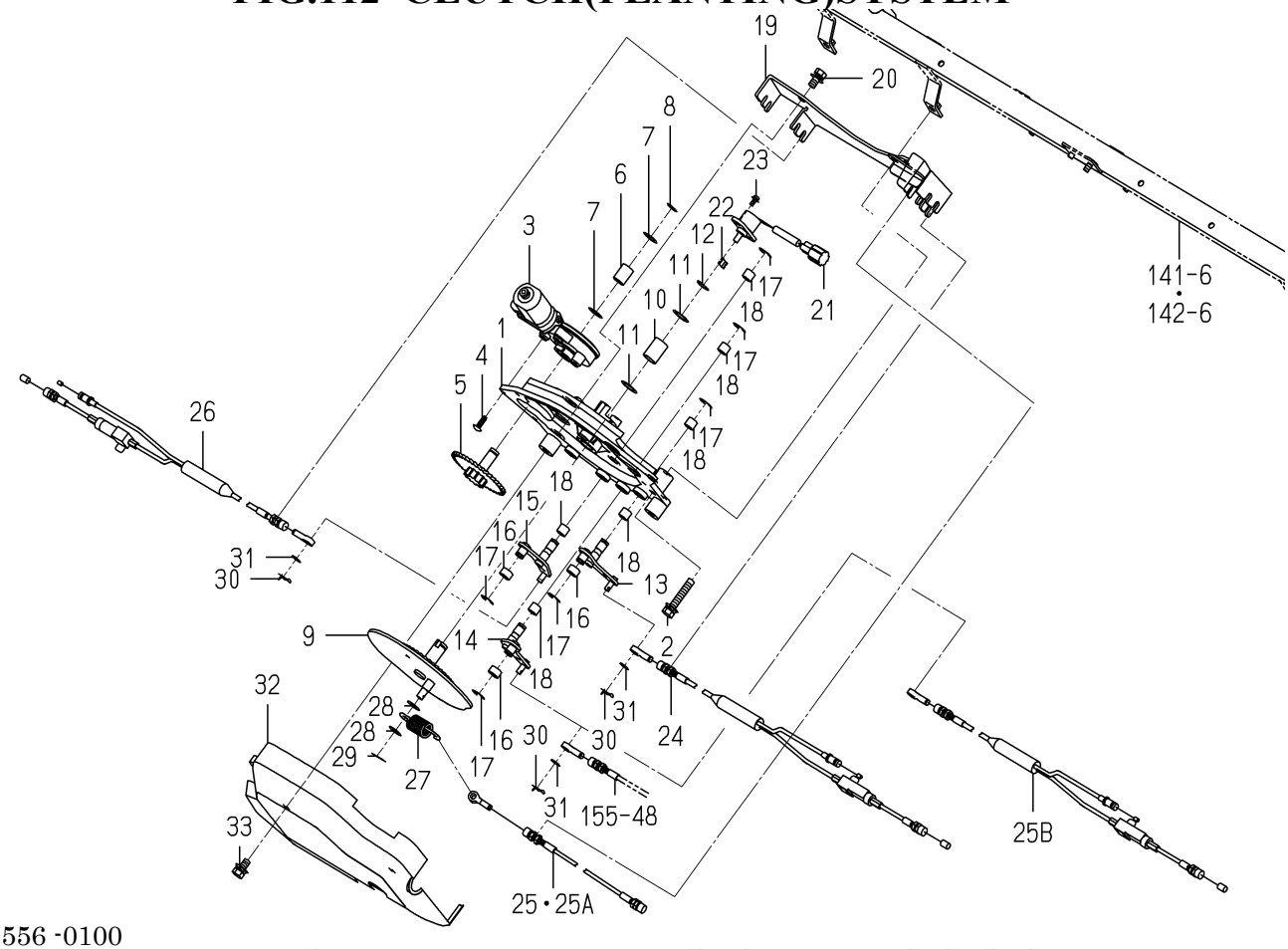

2232-556 -0100

KEY	PART CODE	DESCRIPTION	SPC	TYPE OF MODEL NP60E16		ITC	COL	GRP	REMARKS
1	2232-556-005-30	BASE/MOTOR/CLUTCH	*	1					
2	V211-360-804-50	BOLT,SP/M8X45	*	2					
3	3888-726-200-00	MOTOR/LH ASSY	*	1					
4	3888-218-001-00	TAPPINGSCREW/M5X16	*	3					
5	2232-556-320-10	SHAFT/RIDGE CLUTCH/C	*	1					
6	2232-556-023-10	BUSH/12X15X20	*	1					
7	8836-703-055-00	WASHER/M12X20X01	*	2					
8	V704-140-012-00	RING,SNAP/12 C	*	1					
9	2232-556-210-00	GEAR/RIDGECLUTC COMP	*	1					
10	2232-556-024-00	BUSH/15X18X25	*	1					
11	3817-493-005-00	WASHER/15X23X01	*	2					
12	V704-140-015-00	RING,SNAP/15 C	*	1					
13	2232-556-270-10	ARM/CLUTCH/1 COMP	*	1					
14	2232-556-280-10	ARM/CLUTCH/2 COMP	*	1					
15	2232-556-290-10	ARM/CLUTCH/3 COMP	*	1					
16	2232-556-001-00	COLLAR/10X14X8	*	3					
17	V710-140-008-00	RING,SNAP/8 E	*	6					
18	2163-802-007-00	BUSH/10X12X10	*	6					
19	2232-556-260-00	PLATE/OUTER COMP	*	1					
20	V211-360-801-60	BOLT,SP/M8X16	*	2					
21	2232-556-230-00	SENSOR/ANGLE/330	*	1					
22	2232-556-032-00	SPACER/SENSOR/ANGLE	*	1					
23	V120-364-001-00	SCREW,SP/M4X10	*	61-2					
24	2232-556-011-10	CABLE/RIDGE CLUTCH/6	*	1					
25	2232-556-012-10	CABLE/RIDGE CLUTCH/6	*	1 -630					
25A	2232-556-012-20	CABLE/RIDGE CLUTCH/6	*	1 -1133		1			
25B	2232-556-042-00	CABLE/RIDGE CLUTCH 2	*	1 1134-					
26	2232-556-013-10	CABLE/RIDGE CLUTCH/6	*	1					
27	2232-556-022-00	SPRING/HE060	*	1 -1133					
28	2140-420-012-10	WASHER/09X22X02	*	2 -1133					

FIG.112 CLUTCH(PLANTING)SYSTEM

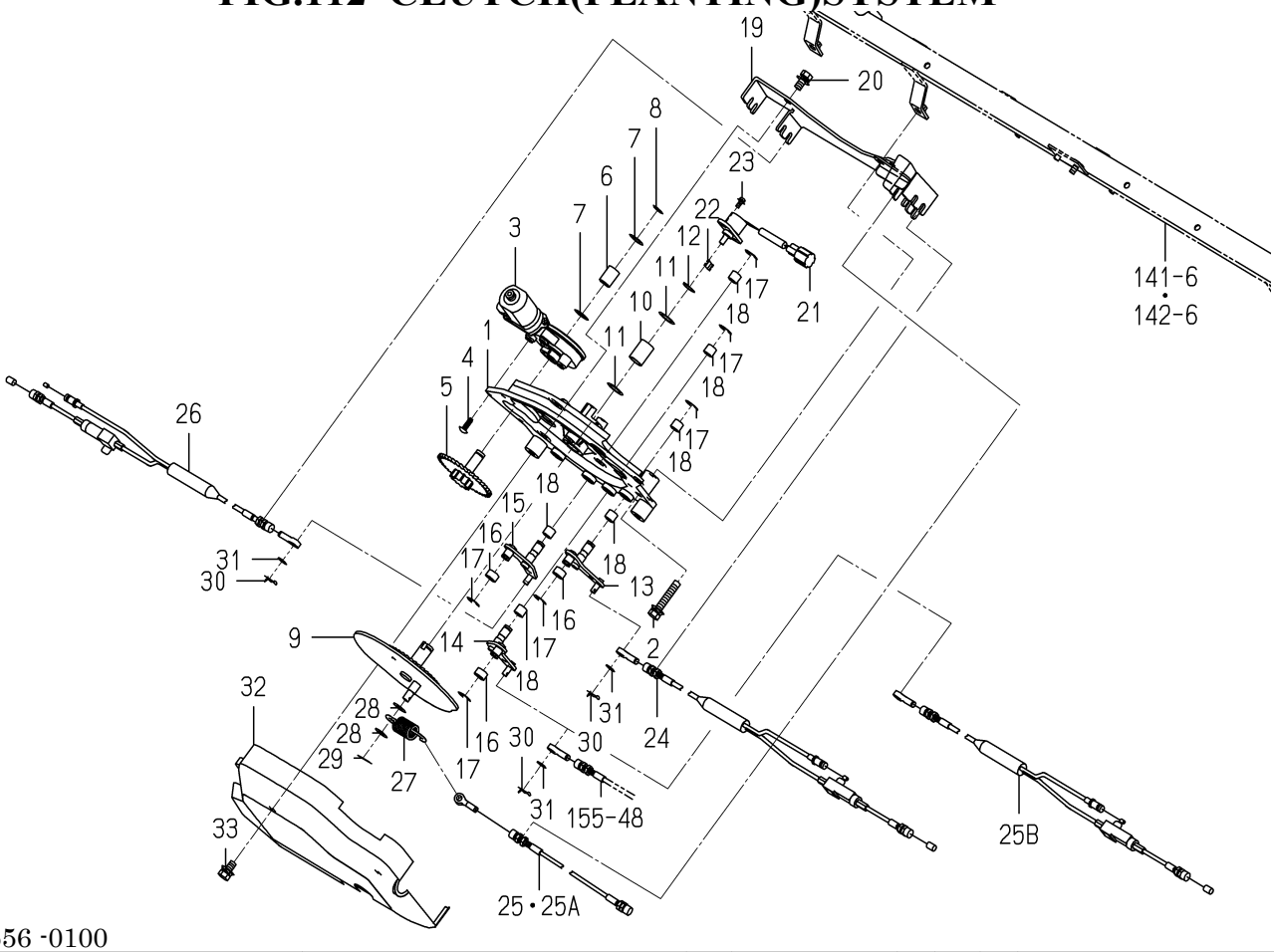

2232-556 -0100

KEY	PART CODE	DESCRIPTION	SPC	TYPE OF MODEL NP60E16		ITC	COL	GRP	REMARKS
29	V500-162-501-50	PIN,SPLIT/2.5X15	*	1 -1133					
30	2161-735-005-00	PIN	*	3					
31	V411-260-006-00	WASHER,PL/M6	*	3					
32	2232-556-007-00	COVER/RIDGECLUTCH	*	1					
33	V211-360-801-60	BOLT,SP/M8X16	*	2					

FIG.113 DRIVE(ROTOR)SYSTEM

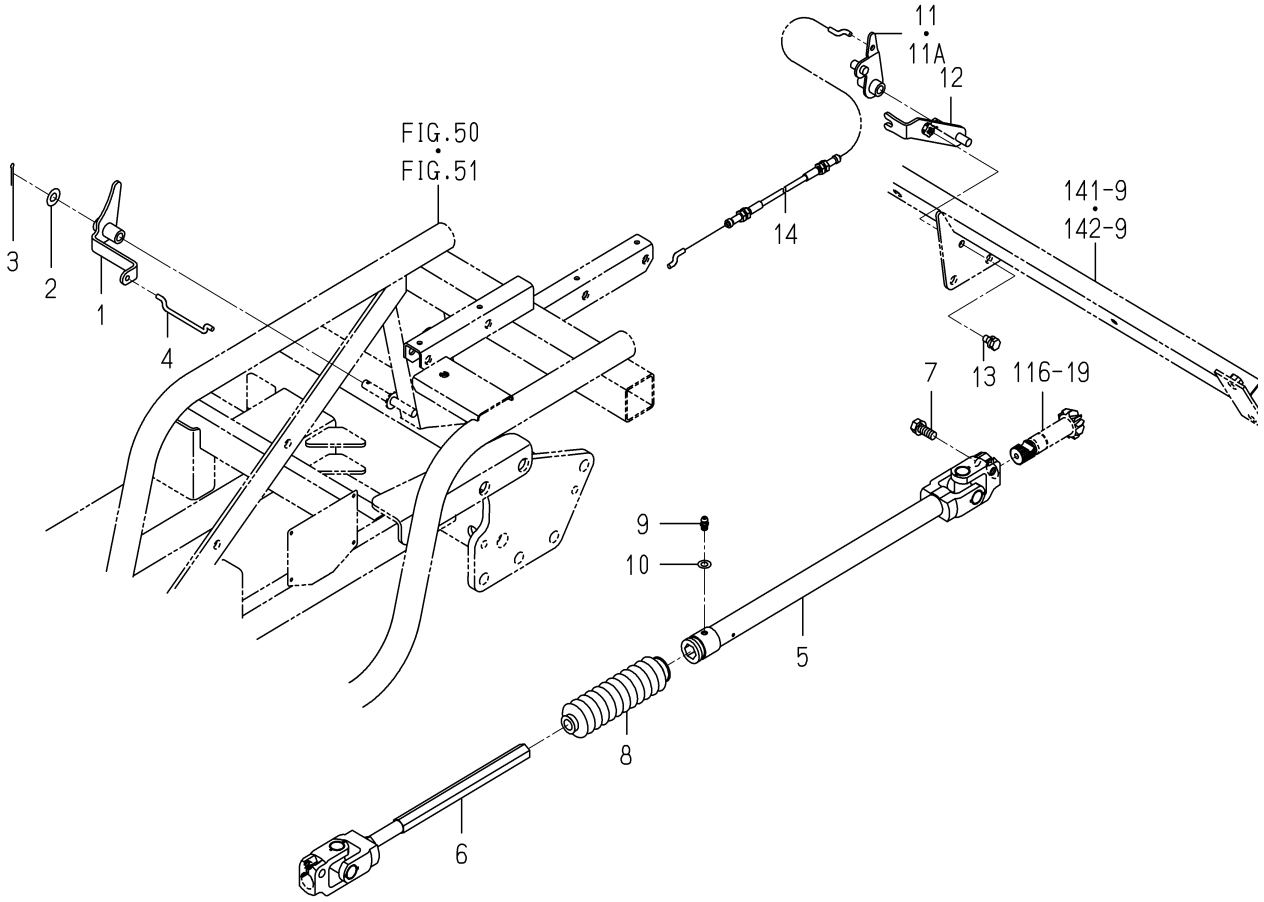

2232-581A-0100

KEY	PART CODE	DESCRIPTION	SPC	TYPE OF MODEL NP60E16		ITC	COL	GRP	REMARKS
1	2232-581-200-10	ARM/CLUCH/ROTOR COMP	*	1					
2	V411-260-008-00	WASHER,PL/M8	*	1					
3	V500-162-002-00	PIN,SPLIT/2X20	*	1					
4	2232-581-001-00	ROD/CLUTCH/ROTOR	*	1					
5	2232-581-230-00	SHAFT/ROTOR/REAR/NP	*	1					
6	2213-581-200-10	SHAFT/ROTOR/FRONT/8	*	1		1			
7	V211-560-802-50	BOLT,S/M8X25/7T	*	2					
8	2204-581-049-00	BOOTS/ROTOR/DRIVE	*	1					
9	V760-150-000-00	NIPPLE,GREASE	*	1					
10	V411-260-006-00	WASHER,PL/M6	*	1					
11	2233-581-200-00	ARM/ROTOR/CLUCH COMP	*	1 -516					
11A	2233-581-200-10	ARM/ROTOR/CLUCH COMP	*	1 517-		1			
12	2233-581-210-00	PLATE/CABLE COMP	*	1					
13	V210-260-601-60	BOLT,S/M6X16	*	1					
14	2233-581-002-00	CABLE/ROTOR/CLUCH	*	1					

FIG.114 SHAFT(ROTOR)SYSTEM

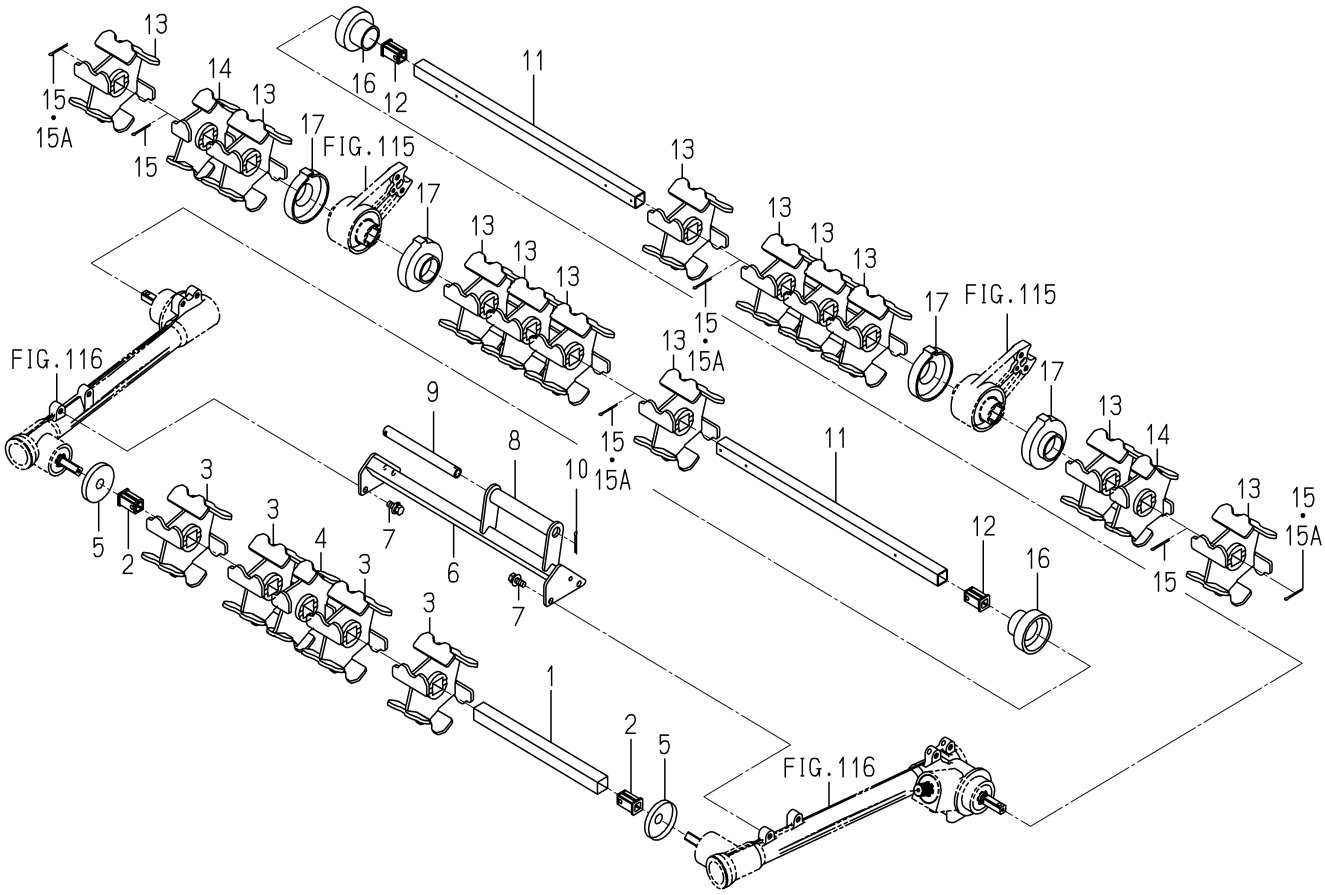

2232-582 -0100

KEY	PART CODE	DESCRIPTION	SPC	TYPE OF MODEL NP60E16		ITC	COL	GRP	REMARKS
1	2204-582-052-00	SHAFT/ROTOR/6/CENTER	*	1					
2	2204-582-055-00	HUB/ROTOR/M	*	2					
3	2204-582-063-00	ROTOR/72/M	*	4					
4	2204-582-062-00	ROTOR/36/M	*	1					
5	2204-582-059-00	COVER/COIL/M	*	2					
6	2232-582-200-00	STAY/ROTOR/CENTER	*	1					
7	V211-360-802-00	BOLT,SP/M8X20	*	4					
8	2204-582-012-00	ROLLER(ROTARY)	*	1					
9	2232-582-009-00	TUBE/ROLLER	*	1					
10	2204-582-015-00	PIN,SPLIT/3X30/SUS	*	1					
11	2232-582-003-00	SHAFT/ROTOR/6	*	2					
12	2204-582-055-00	HUB/ROTOR/M	*	2					
13	2204-582-063-00	ROTOR/72/M	*	12					
14	2204-582-062-00	ROTOR/36/M	*	2					
15	2204-582-015-00	PIN,SPLIT/3X30/SUS	*	6 -60					
15A	2204-582-015-00	PIN,SPLIT/3X30/SUS	*	4 61-					
16	2232-582-008-00	BUSH/ROTOR/SIDE	*	2					
17	2232-582-011-00	COLLAR/ROTOR/SIDE	*	4					

FIG.115 LEVER(DEPTH/ROTOR)SYSTEM

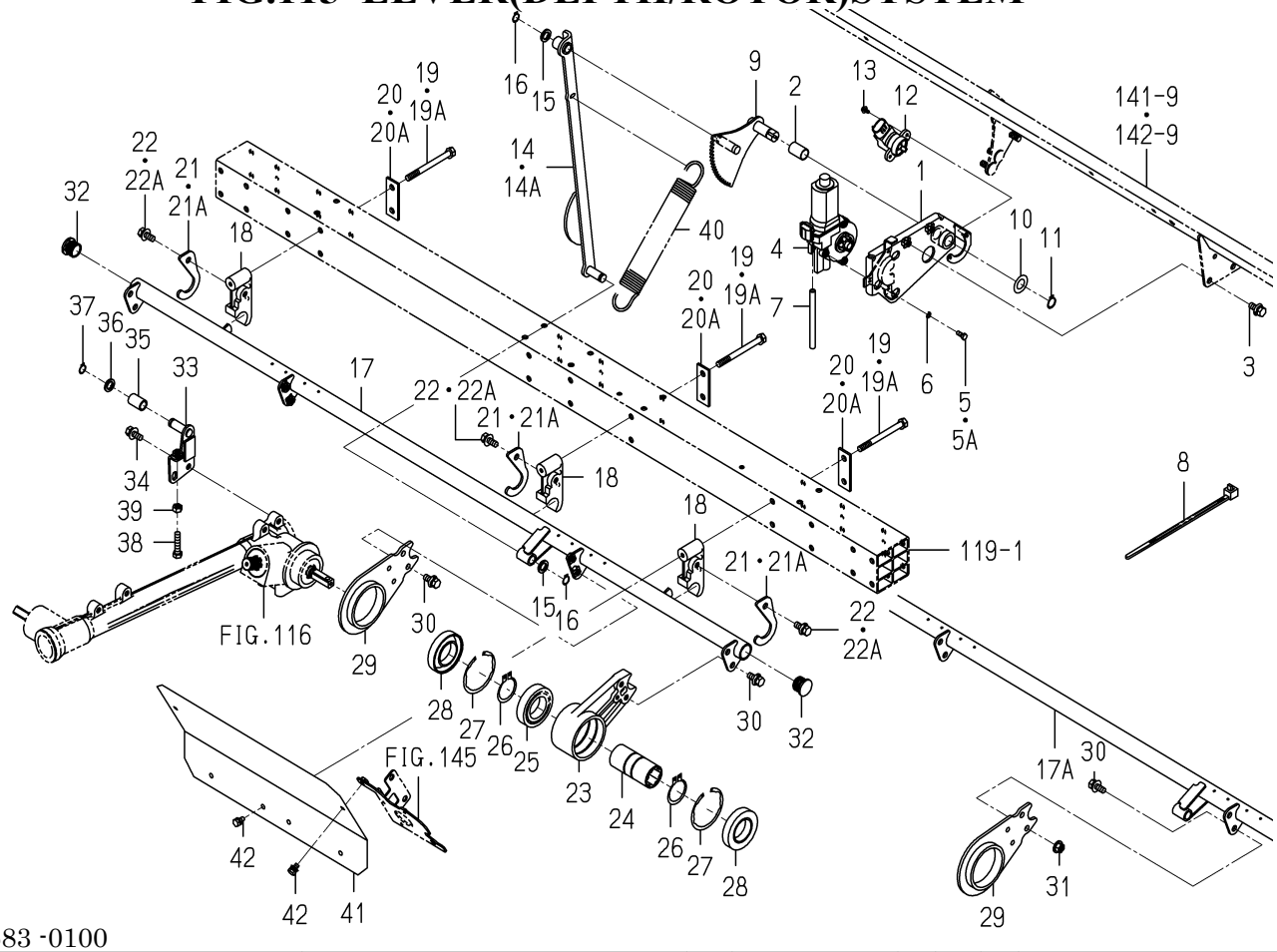

2232-583 -0100

KEY	PART CODE	DESCRIPTION	SPC	TYPE OF MODEL NP60E16		ITC	COL	GRP	REMARKS
1	2232-583-200-20	BASE/MOTOR/ROTO COMP	*	1					
2	2232-583-005-00	BUSH/15X17X25	*	1					
3	V211-360-802-00	BOLT,SP/M8X20	*	2					
4	2194-543-200-00	MOTER	*	1					
5	V200-260-501-20	BOLT/M5X12	*	3 -60					
5A	V120-365-001-60	SCREW,SP/M5X16	*	3 61-					
6	V401-160-005-00	WASHER,SP/M5	*	3 -60					
7	2194-543-001-00	TUBE/100	*	1					
8	2132-545-008-00	WIRE BAND(92)	*	1					
9	2232-583-210-10	GEAR/ROTOR COMP	*	1					
10	3747-342-002-00	WASHER	*	1					
11	V704-140-015-00	RING,SNAP/15 C	*	1					
12	1729-662-330-00	SENSOR/ANGLE/75 ASSY	*	1					
13	V120-364-001-00	SCREW,SP/M4X10	*	2					
14	2232-583-220-00	ARM/MOTOR/ROTOR COMP	*	1 -630					
14A	2232-583-220-10	ARM/MOTOR/ROTOR COMP	*	1 631-		1			
15	2130-725-006-00	WASHER	*	2					
16	2145-774-003-00	SNAPRING	*	2					
17	2232-583-240-00	FRAME/ROTOR HEIGHT/6	*	1 -630			5N		
17A	2232-583-240-10	FRAME/ROTOR HEIGHT/6	*	1 631-		3	5N		
18	2232-583-001-00	STAY/ROTOR	*	3					
19	2232-603-003-00	BOLT/M8X90	*	6 -60					
19A	2232-603-003-10	BOLT/M8X90	*	6 61-		1			
20	2232-603-002-00	PLATE/I/24X64	*	3 -60					
20A	2232-603-002-10	PLATE/I/24X64	*	3 61-		1			
21	2232-583-016-00	PLATE/HOLDER/ROTOR	*	3 -60					
21A	2232-583-016-10	PLATE/HOLDER/ROTOR	*	3 61-		1			
22	V211-360-802-00	BOLT,SP/M8X20	*	3 -60					
22A	2232-645-023-00	BOLT/SP/M8X20/G	*	3 61-					
23	2232-583-003-10	ARM/ROTOR	*	2					

FIG.115 LEVER(DEPTH/ROTOR)SYSTEM

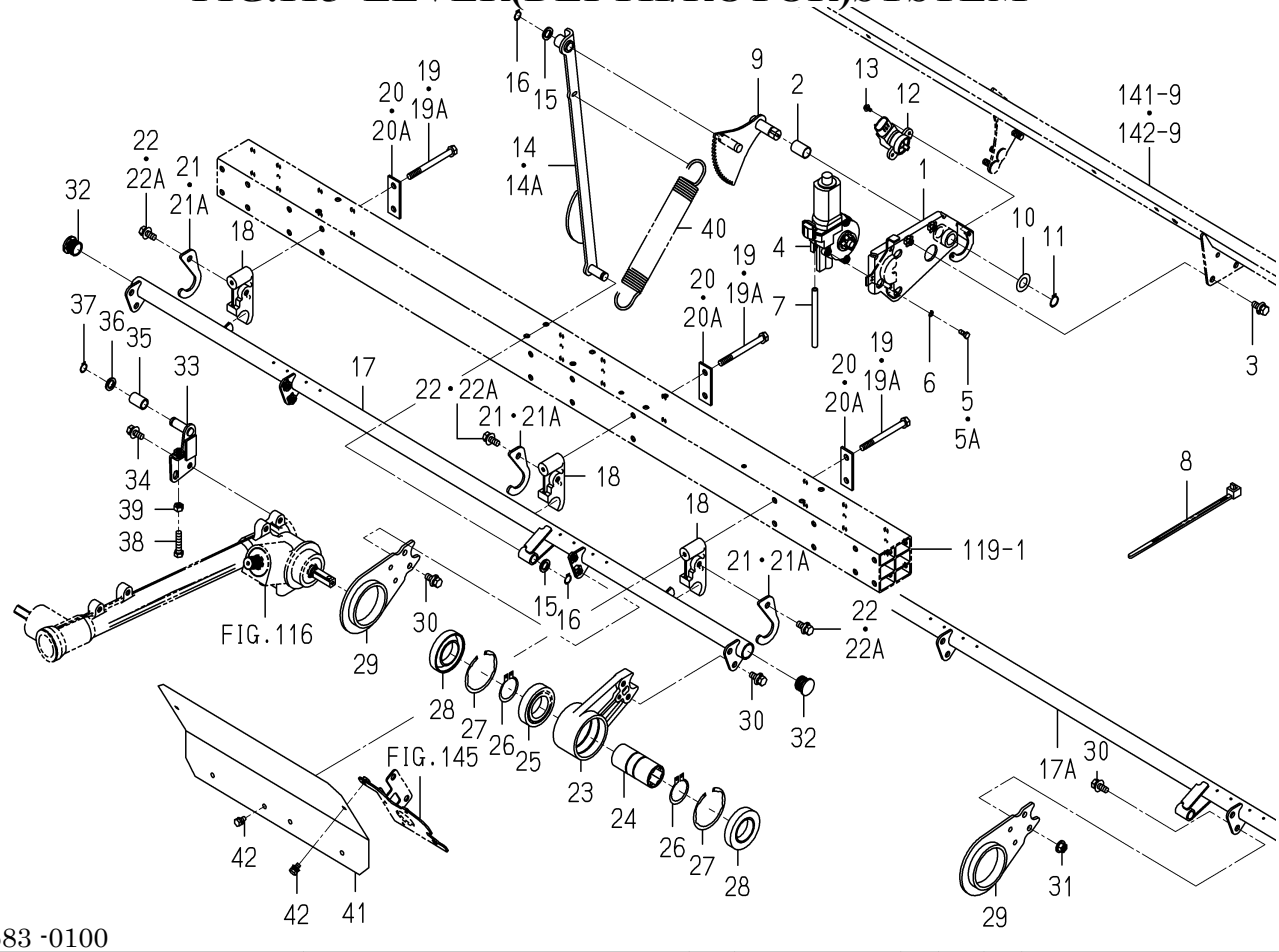

2232-583 -0100

KEY	PART CODE	DESCRIPTION	SPC	TYPE OF MODEL NP60E16		ITC	COL	GRP	REMARKS
24	2213-583-053-00	HUB/21X35X76	*	2					
25	V600-150-600-70	BEARING,RB/6007SS	*	2					
26	V704-140-035-00	RING,SNAP/35 C	*	4					
27	V707-140-062-00	RING,SNAP/R62	*	4					
28	7827-205-010-00	SEAL/OIL	*	4					
29	2232-583-008-10	PLATE/ARM/ROTOR	*	2		1			
30	V211-360-802-00	BOLT,SP/M8X20	*	8					
31	V362-260-008-00	NUT/WASHER/M8	*	4					
32	2213-516-006-00	CAP/22X15	*	631-2-60					
33	2232-583-280-10	GUIDE/ROTOR COMP	*	1					
34	V211-360-802-00	BOLT,SP/M8X20	*	2					
35	2232-583-009-00	COLLAR/12X16X24	*	1					
36	2130-725-006-00	WASHER	*	1					
37	V704-140-012-00	RING,SNAP/12 C	*	1					
38	V201-260-803-50	BOLT/M8X35	*	1					
39	V304-260-008-00	NUT/M8	*	1					
40	2232-583-004-00	SPRING/HE240	*	1					
41	2232-583-002-10	COVER/ROTOR/6	*	2			5N		
42	V210-360-601-20	BOLT,SP/M6X12	*	4					

FIG.116 CASE(CHAIN)SYSTEM(1/2)

25~30-PLEASE SEE 2/2 PAGE

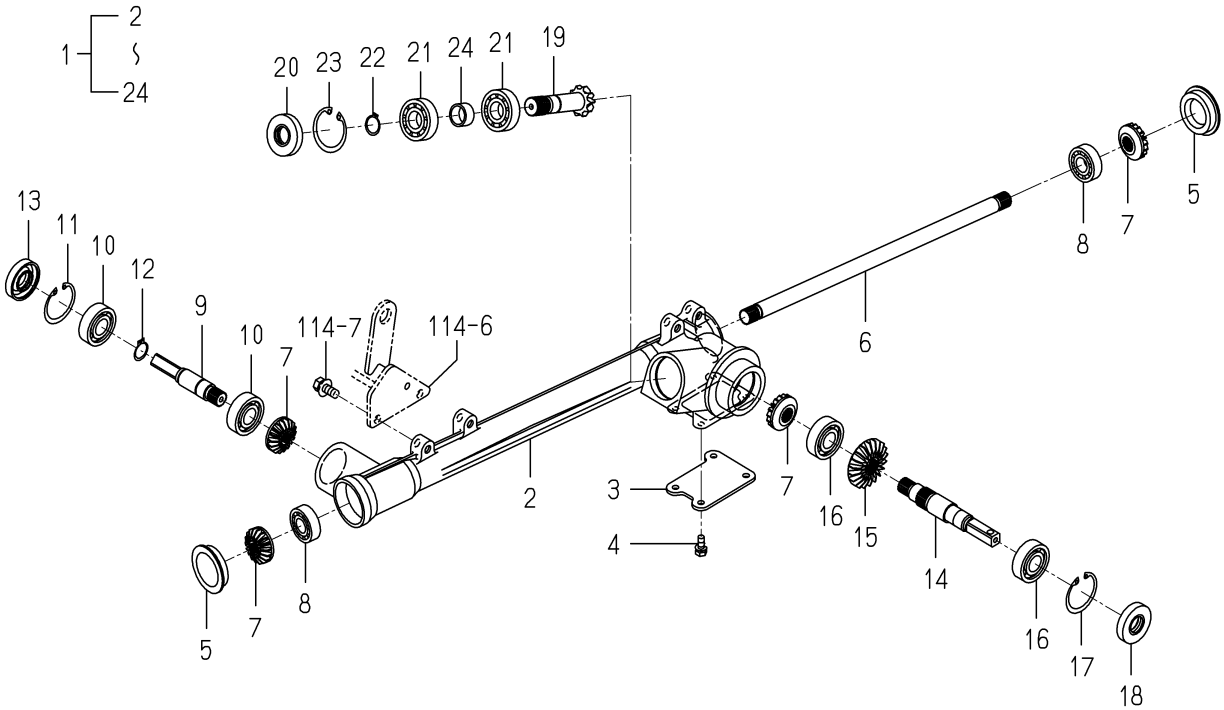

2204-589M-0100

KEY	PART CODE	DESCRIPTION	SPC	TYPE OF MODEL NP60E16		ITC	COL	GRP	REMARKS
1	2204-589-500-00	CASE/CENTERROTOR/LH	*	1					
2	2204-589-051-00	CASE/CENTERROTOR/LH	*	1					
3	2204-589-053-00	COVER/CASE/ROTOR	*	1					
4	V210-560-601-20	BOLT,S/M6X12/7T	*	4					
5	2204-589-066-00	PLUG/BOA/42	*	2					
6	2204-589-057-10	SHAFT/CENTER ROTOR/D	*	1					
7	2204-589-068-00	GEAR/BEVEL/12/FORGIN	*	4					
8	V600-150-620-20	BEARING,RB/6202SS	*	2					
9	2204-589-058-10	SHAFT/ROTOR/FRONT	*	1					
10	V600-110-620-30	BEARING,RB/6203	*	2					
11	V705-140-040-00	RING,SNAP/40 C	*	1					
12	V704-140-017-00	RING,SNAP/17 C	*	1					
13	2204-589-065-00	SEAL/OIL	*	1					
14	2204-589-061-10	SHAFT/ROTOR/REAR/LH	*	1					
15	2204-589-063-00	GEAR/BEVEL/20	*	1					
16	V600-110-620-30	BEARING,RB/6203	*	2					
17	V705-140-040-00	RING,SNAP/40 C	*	1					
18	2204-589-065-00	SEAL/OIL	*	1					
19	2204-589-062-00	GEAR/BEVEL/10	*	1					
20	2204-589-065-00	SEAL/OIL	*	1					
21	V600-110-620-30	BEARING,RB/6203	*	2					
22	V704-140-017-00	RING,SNAP/17 C	*	1					
23	V705-140-040-00	RING,SNAP/40 C	*	1					
24	2204-589-067-00	COLLAR/18X22X12	*	1					
25	2204-589-510-00	CASE/CENTERROTOR/RH	*	1					
26	2204-589-052-00	CASE/CENTERROTOR/RH	*	1					
27	2204-589-066-00	PLUG/BOA/42	*	2					
28	2204-589-057-10	SHAFT/CENTER ROTOR/D	*	1					
29	2204-589-068-00	GEAR/BEVEL/12/FORGIN	*	4					
30	V600-150-620-20	BEARING,RB/6202SS	*	2					

FIG.116 CASE(CHAIN)SYSTEM(2/2)

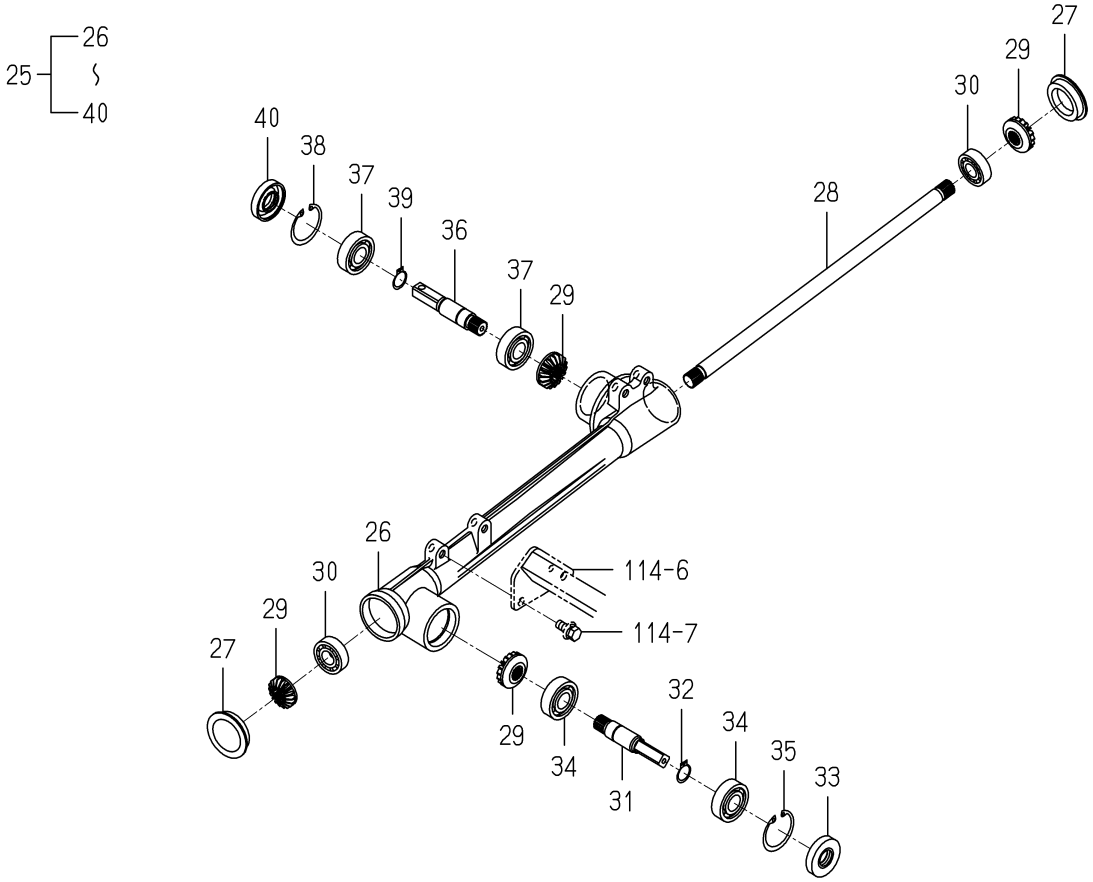

2204-589M-0100

KEY	PART CODE	DESCRIPTION	SPC	TYPE OF MODEL NP60E16		ITC	COL	GRP	REMARKS
31	2204-589-058-10	SHAFT/ROTOR/FRONT	*	1					
32	V704-140-017-00	RING,SNAP/17 C	*	1					
33	2204-589-065-00	SEAL/OIL	*	1					
34	V600-110-620-30	BEARING,RB/6203	*	2					
35	V705-140-040-00	RING,SNAP/40 C	*	1					
36	2204-589-059-10	SHAFT/ROTOR/REAR/RH	*	1					
37	V600-110-620-30	BEARING,RB/6203	*	2					
38	V705-140-040-00	RING,SNAP/40 C	*	1					
39	V704-140-017-00	RING,SNAP/17 C	*	1					
40	2204-589-065-00	SEAL/OIL	*	1					

FIG.117 LIFT SYSTEM

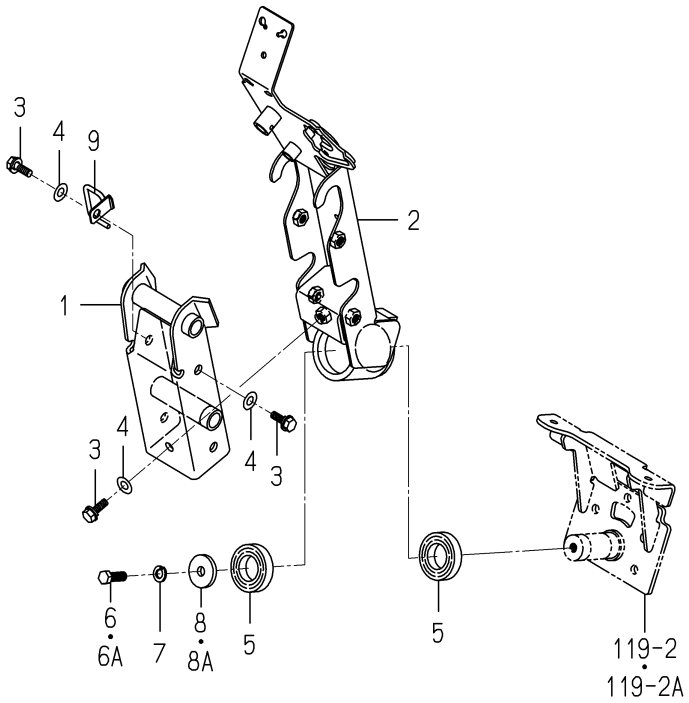

2232-601 -0100

KEY	PART CODE	DESCRIPTION	SPC	TYPE OF MODEL NP60E16		ITC	COL	GRP	REMARKS
1	2232-601-200-10	LIFT COMP	*	1					
2	2232-601-210-40	HITCH COMP	*	1					
3	2194-338-003-20	BOLT/M10X25	*	5					
4	V411-260-010-00	WASHER,PL/M10	*	5					
5	V600-150-600-60	BEARING,RB/6006SS	*	2					
6	V201-361-003-00	BOLT/M10X30/7T	*	1 -60					
6A	2232-601-001-00	BOLT/M10X30/7T/G	*	1 61-					
7	V401-160-010-00	WASHER,SP/M10	*	1					
8	2142-101-005-00	WASHER	*	1 -60					
8A	2232-601-002-00	WASHER/11X38X06/G	*	1 61-					
9	2233-601-310-00	GUIDE/HARNESS/LIFT	*	1 61-					

FIG.118 STOPPER(ROLLING)SYSTEM

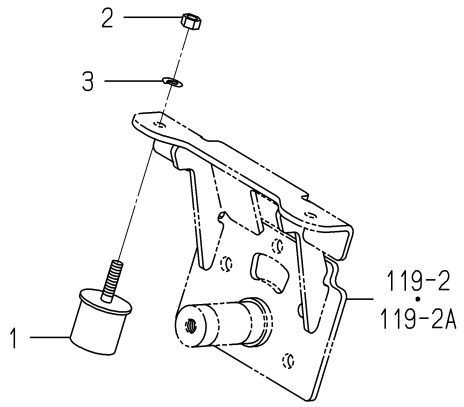

2232-602 -0100

KEY	PART CODE	DESCRIPTION	SPC	TYPE OF MODEL NP60E16		ITC	COL	GRP	REMARKS
1	2220-618-002-10	STOPPER/ROLLING/6V	*	2					
2	V304-260-008-00	NUT/M8	*	2					
3	V401-160-008-00	WASHER,SP/M8	*	2					

FIG.119 RAIL(PLANTING)SYSTEM

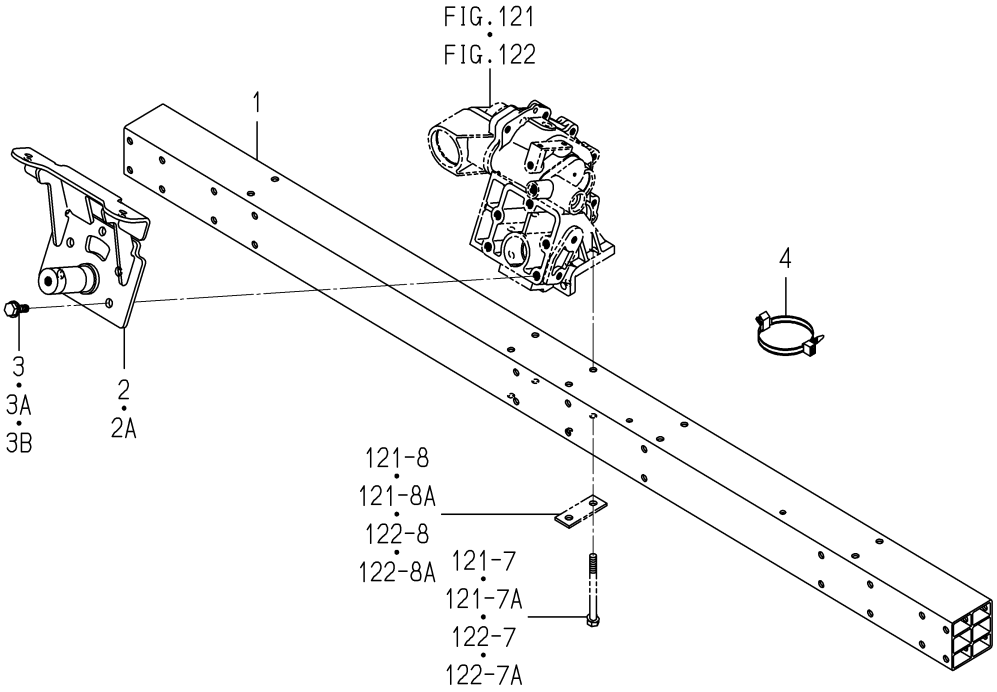

2232-603 -0100

KEY	PART CODE	DESCRIPTION	SPC	TYPE OF MODEL NP60E16		ITC	COL	GRP	REMARKS
1	2232-603-004-00	RAIL/PLANTING/6	*	1					
2	2232-603-200-10	BRACKET/ROLLING COMP	*	1 -630					
2A	2232-603-200-40	BRACKET/ROLLING COMP	*	1 631-		1			
3	2194-338-003-20	BOLT/M10X25	*	5 -60					
3A	2232-603-011-00	BOLT/SEAL/M10X25/S/G	*	5 -630					
3B	2232-603-012-00	BOLT/SEAL/M10X30/S/G	*	5 631-					
4	1560-666-004-00	BAND	*	2					

FIG.120 LINK(FLOAT)SYSTEM

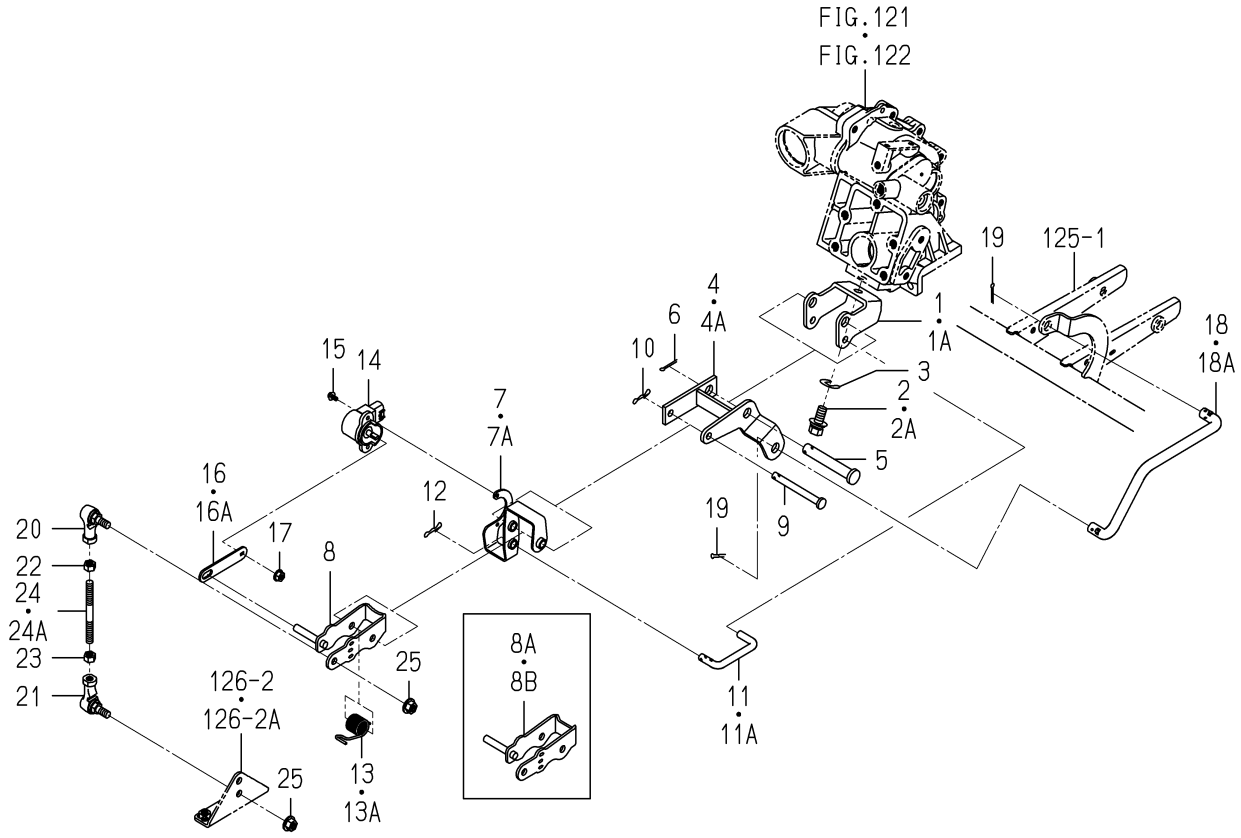

2232-605 -0100

KEY	PART CODE	DESCRIPTION	SPC	TYPE OF MODEL NP60E16		ITC	COL	GRP	REMARKS
1	2232-605-007-00	STAY/ANGLE	*	1 -60					
1A	2232-605-007-10	STAY/ANGLE	*	1 61-		1			
2	V211-361-002-50	BOLT,SP/M10X25	*	1 -60					
2A	2232-605-017-00	BOLT/SP/M10X25/G	*	1 61-					
3	2120-340-003-00	SHIM,PLANTING A/0.1	*	1 -570					
4	2232-605-210-30	STAY/FLOAT/CENTER	*	1 -60					
4A	2232-605-210-40	STAY/FLOAT/CENTER	*	1 61-		1			
5	2232-605-008-00	PIN/12X82	*	1					
6	V500-163-002-00	PIN,SPLIT/3X20	*	1					
7	2232-605-240-00	PLATE/LINK/SENSOR	*	1 -60					
7A	2232-605-240-10	PLATE/LINK/SENSOR	*	1 61-		1			
8	2232-605-230-20	ARM/EFLOATSENSE COMP	*	1 -10					
8A	2232-605-230-30	ARM/EFLOATSENSE COMP	*	1 -60		1			
8B	2232-605-230-40	ARM/EFLOATSENSE COMP	*	1 61-		1			
9	2137-330-004-00	PIN,FLOAT	*	1					
10	2161-735-006-00	PIN/STOPPER/8	*	1					
11	2232-605-012-00	ROD/LINK	*	1 -60					
11A	2232-605-012-10	ROD/LINK	*	1 61-		1			
12	2161-735-006-00	PIN/STOPPER/8	*	1					
13	2232-605-011-00	SPRING/HT018	*	1 -60					
13A	2232-605-011-10	SPRING/HT018	*	1 61-		1			
14	1729-662-340-00	SENSOR/ANGLE/110/R	*	1					
15	V120-364-001-00	SCREW,SP/M4X10	*	2					
16	2232-605-010-00	PLATE/SENSOR/FLOAT	*	1 -60					
16A	2232-605-010-10	PLATE/SENSOR/FLOAT	*	1 61-		1			
17	V360-260-006-00	NUT/WASHER/M6	*	1					
18	2232-605-006-10	ROD/ANGLE	*	1 -60					
18A	2232-605-006-20	ROD/ANGLE	*	1 61-		1			
19	V500-163-002-00	PIN,SPLIT/3X20	*	2					
20	1560-695-021-00	JOINT BALL M08RH	*	1					

FIG.120 LINK(FLOAT)SYSTEM

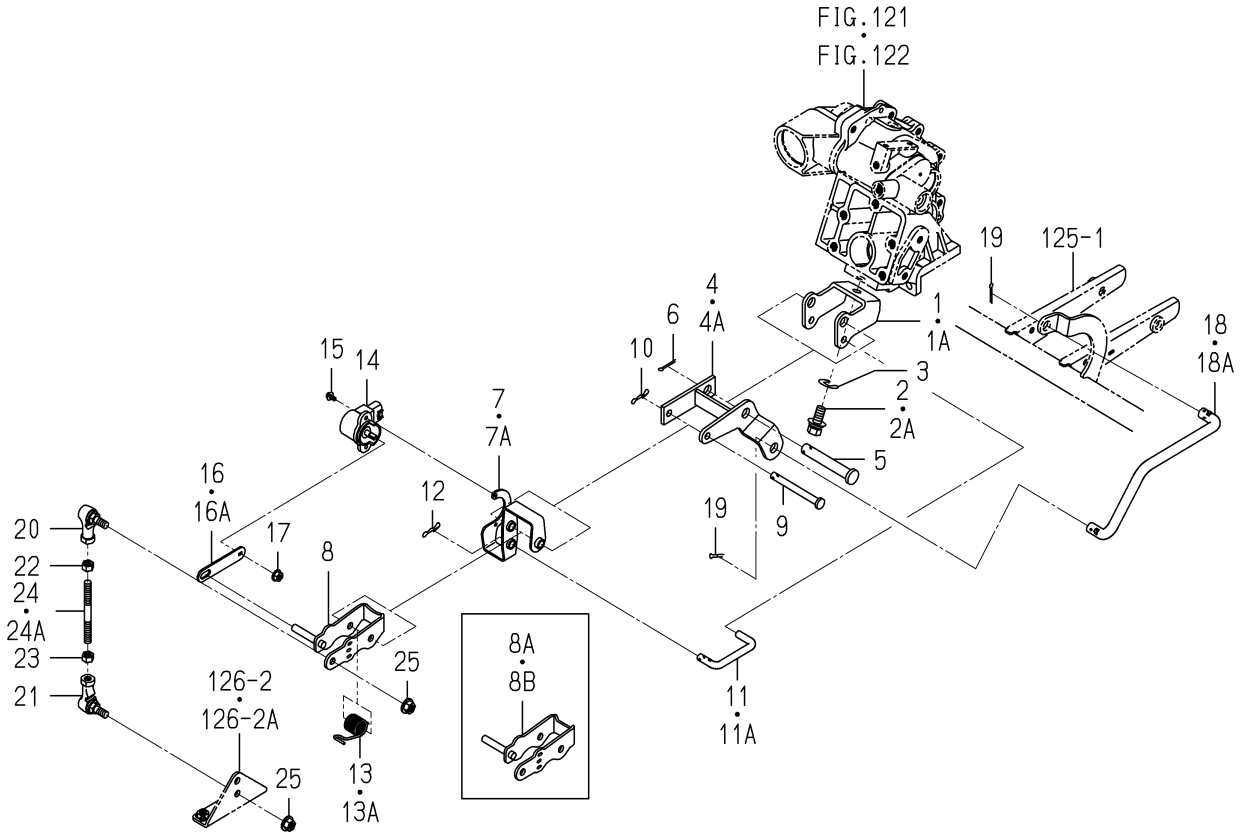

2232-605 -0100

KEY	PART CODE	DESCRIPTION	SPC	TYPE OF MODEL NP60E16		ITC	COL	GRP	REMARKS
21	1560-695-022-00	JOINT BALL M08LH	*	1					
22	V304-260-008-00	NUT/M8	*	1					
23	1560-132-007-30	NUT/LH/M08	*	1					
24	2232-605-016-00	ROD/FLOAT	*	1 -60					
24A	2232-605-016-20	ROD/FLOAT	*	1 61-		1			
25	V362-260-008-00	NUT/WASHER/M8	*	2					

FIG.121 SLIDE SYSTEM(D TYPE)

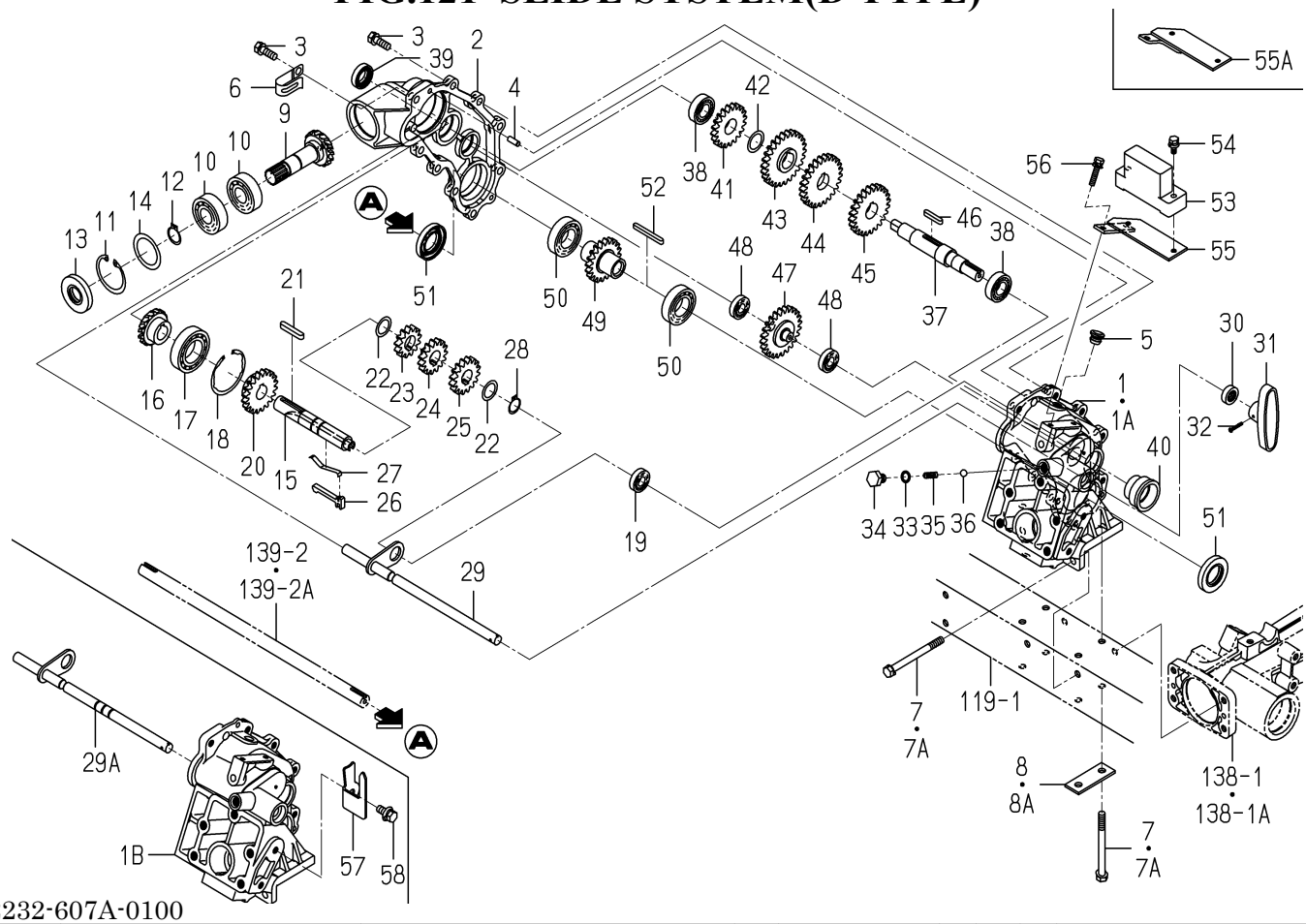

2232-607A-0100

KEY	PART CODE	DESCRIPTION	SPC	TYPE OF MODEL NP60E16		ITC	COL	GRP	REMARKS
1	2232-607-001-10	CASE/SEND/LH	*	1 -570					
1A	2232-607-001-20	CASE/SEND/LH	*	1 -630		1			
1B	2232-607-001-30	CASE/SEND/LH	*	1 631-		3			
2	2232-607-002-00	CASE/SEND/LH	*	1					
3	V211-260-802-50	BOLT,S/M8X25	*	9					
4	V522-100-601-60	PIN,ST,A/6X16	*	2					
5	2142-736-236-00	PLUG	*	1					
6	1425-621-004-00	HOLDER/JE/9-9	*	1 61-					
7	2232-603-003-00	BOLT/M8X90	*	6 -60					
7A	2232-603-003-10	BOLT/M8X90	*	6 61-		1			
8	2232-603-002-00	PLATE/I/24X64	*	2 -60					
8A	2232-603-002-10	PLATE/I/24X64	*	2 61-		1			
9	2232-607-003-10	SHAFT/PLANTING/IN	*	1					
10	V600-110-620-40	BEARING,RB/6204	*	2					
11	V705-140-047-00	RING,SNAP/47 C	*	1					
12	V704-140-020-00	RING,SNAP/20 C	*	1					
13	V744-120-470-70	SEAL,OIL/TC20477	*	1					
14	2232-607-027-00	SHIM/35X47X0.2	*	1					
15	2232-607-004-00	SHAFT/SEND	*	1					
16	2232-607-019-10	GEAR/BEVEL/15	*	1					
17	V600-110-600-60	BEARING,RB/6006	*	1					
18	V707-140-055-00	RING,SNAP/R55	*	1					
19	V600-110-600-10	BEARING,RB/6001	*	1					
20	2232-607-005-20	GEAR/SPUR/20	*	1					
21	3565-403-008-00	KEY,CARRIER STAR	*	1					
22	3555-404-008-00	COLLAR, CARRIER	*	2					
23	2232-607-008-00	GEAR/SPUR/13/24TIMES	*	1					
24	2232-607-009-00	GEAR/SPUR/15/20TIMES	*	1					
25	2232-607-011-00	GEAR/SPUR/16/18TIMES	*	1					
26	2213-607-041-10	KNOCK/SEND/PZ8	*	1					

FIG.121 SLIDE SYSTEM(D TYPE)

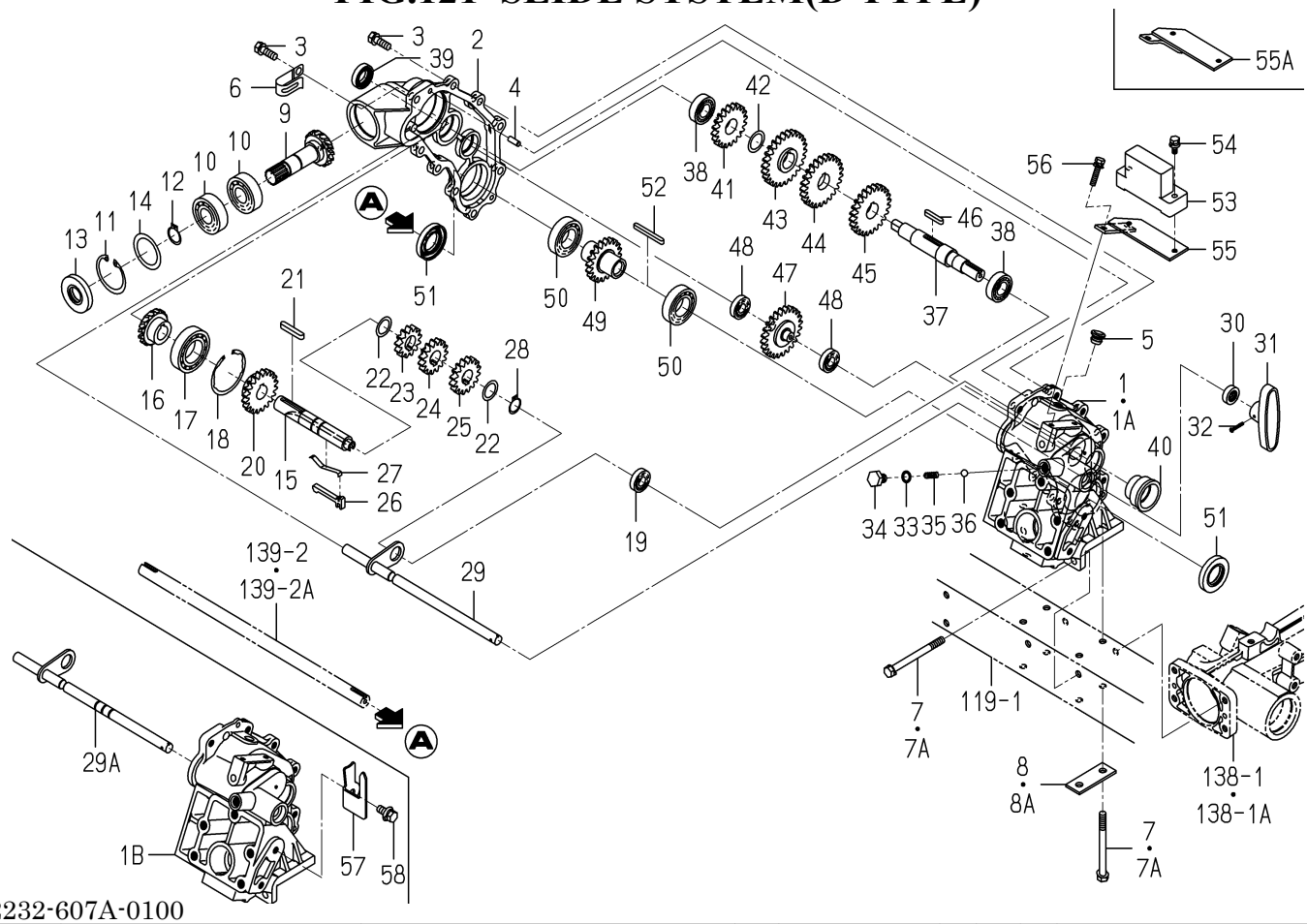

2232-607A-0100

KEY	PART CODE	DESCRIPTION	SPC	TYPE OF MODEL NP60E16		ITC	COL	GRP	REMARKS
27	2213-607-042-20	SPRING/SEND/PZ8	*	1					
28	V704-140-018-00	RING,SNAP/18 C	*	1					
29	2232-607-210-00	SHIFTER/SEND COMP	*	1 -630					
29A	2232-607-240-00	SHIFTER/SEND/3 COMP	*	1 631-					
30	V744-112-220-70	SEAL,OIL/TC12227	*	1					
31	2130-610-012-00	LEVER	*	1					
32	V111-163-002-00	SCREW/M3X20	*	1					
33	V720-101-901-00	O-RING/1A,P10	*	1					
34	2201-201-002-00	BOLT/M10X12	*	1					
35	2213-422-022-00	SPRING/HC021	*	1					
36	V682-200-001-00	BALL,STEEL	*	1					
37	2232-607-012-00	SHAFT/COUNTER/SEND	*	1					
38	V600-110-600-30	BEARING,RB/6003	*	2					
39	V744-117-300-70	SEAL,OIL/TC17307	*	1					
40	2204-607-022-00	SEAL,OIL	*	1					
41	2232-607-020-00	GEAR/SPUR/20	*	1					
42	2110-325-003-00	SHIM,SAFETY CLUTCH	*	1					
43	2232-607-014-00	GEAR/SPUR/26/24TIMES	*	1					
44	2232-607-015-00	GEAR/SPUR/25/20TIMES	*	1					
45	2232-607-016-00	GEAR/SPUR/24/18TIMES	*	1					
46	1308-230-002-00	KEY	*	1					
47	2232-607-017-10	GEAR/SPUR/24	*	1					
48	V600-110-600-10	BEARING,RB/6001	*	2					
49	2232-607-018-00	GEAR/SPUR/20	*	1					
50	V600-110-600-50	BEARING,RB/6005	*	2					
51	V744-125-450-70	SEAL,OIL/TC25457	*	2					
52	2232-702-003-00	KEY/05X05X50	*	1					
53	1690-505-240-00	SENSOR/SLOPE ASSY	*	1					
54	V210-360-603-00	BOLT,SP/M6X30	*	2					
55	2232-607-230-00	STAY/SENSOR/SLOPE	*	1 -1207					

FIG.121 SLIDE SYSTEM(D TYPE)

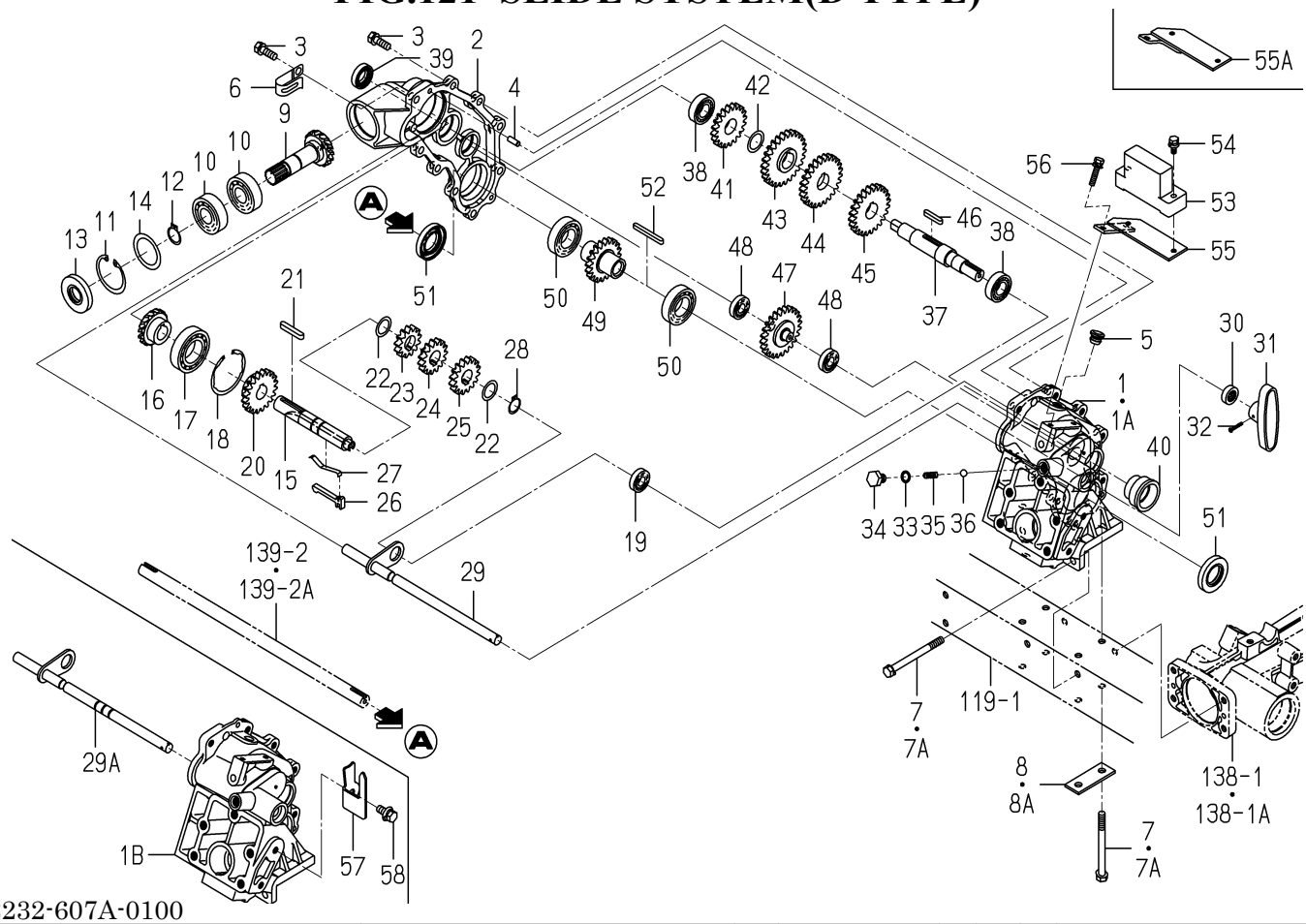

2232-607A-0100

KEY	PART CODE	DESCRIPTION	SPC	TYPE OF MODEL NP60E16		ITC	COL	GRP	REMARKS
55A	2232-607-230-10	STAY/SENSOR/SLOPE	*	1 1208-		1			
56	V210-360-601-60	BOLT,SP/M6X16	*	2					
57	2232-607-031-00	PLATE/INDICATOR	*	1 631-					
58	V211-360-802-00	BOLT,SP/M8X20	*	1 631-					

FIG.122 SLIDE SYSTEM(G TYPE)

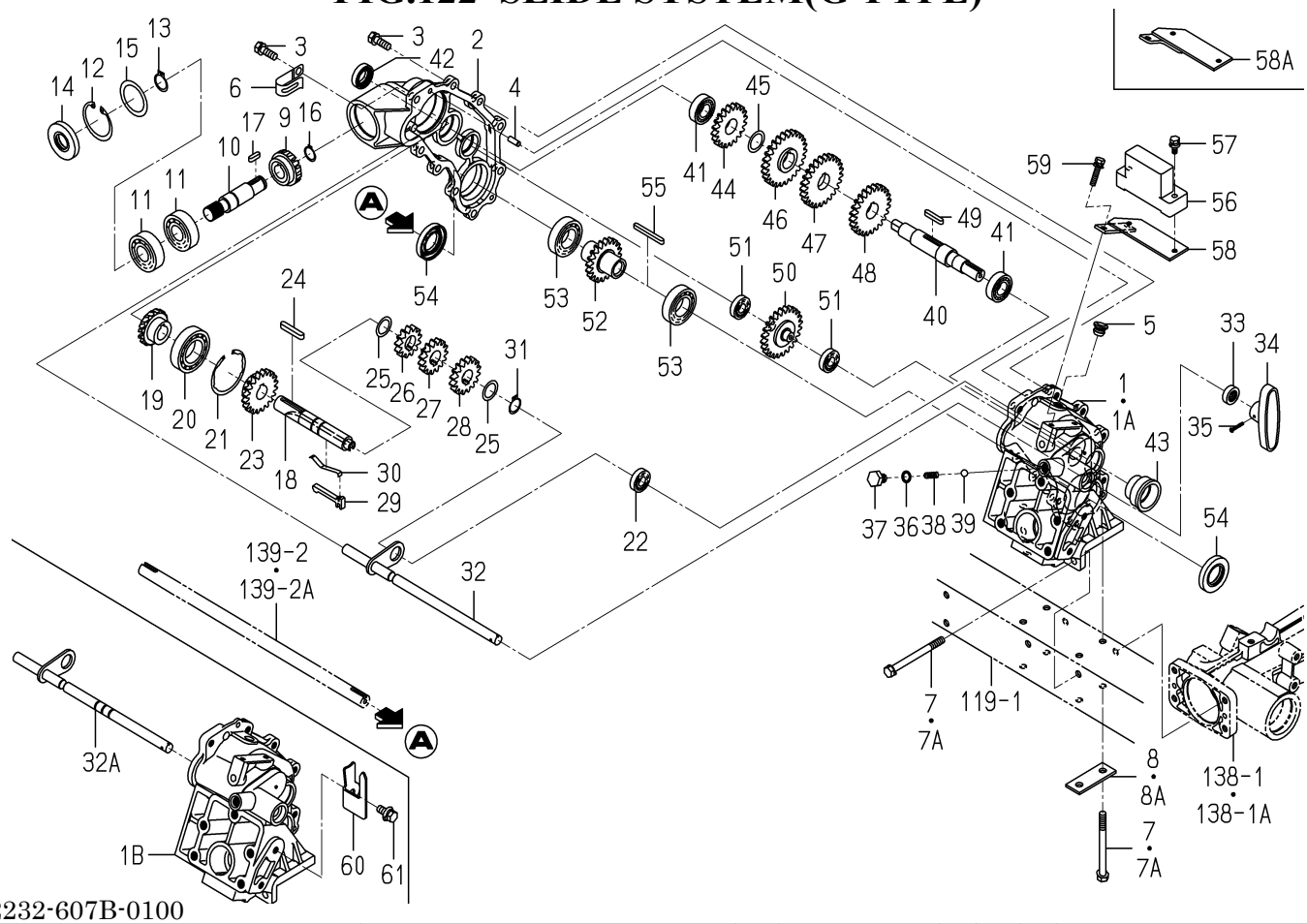

2232-607B-0100

KEY	PART CODE	DESCRIPTION	SPC	TYPE OF MODEL NP60E16		ITC	COL	GRP	REMARKS
1	2232-607-001-10	CASE/SEND/LH	*	1 -570					
1A	2232-607-001-20	CASE/SEND/LH	*	1 -630		1			
1B	2232-607-001-30	CASE/SEND/LH	*	1 631-		3			
2	2232-607-002-00	CASE/SEND/LH	*	1					
3	V211-260-802-50	BOLT,S/M8X25	*	9					
4	V522-100-601-60	PIN,ST,A/6X16	*	2					
5	2142-736-236-00	PLUG	*	1					
6	1425-621-004-00	HOLDER/JE/9-9	*	1 61-					
7	2232-603-003-00	BOLT/M8X90	*	6 -60					
7A	2232-603-003-10	BOLT/M8X90	*	6 61-		1			
8	2232-603-002-00	PLATE/I/24X64	*	2 -60					
8A	2232-603-002-10	PLATE/I/24X64	*	2 61-		1			
9	2144-604-002-10	GEAR,BEVEL/15T	*	1					
10	2232-607-029-10	SHAFT/PLANTING/IN/G	*	1					
11	V600-110-620-40	BEARING,RB/6204	*	2					
12	V705-140-047-00	RING,SNAP/47 C	*	1					
13	V704-140-020-00	RING,SNAP/20 C	*	1					
14	V744-120-470-70	SEAL,OIL/TC20477	*	1					
15	2232-607-027-00	SHIM/35X47X0.2	*	1					
16	V704-140-017-00	RING,SNAP/17 C	*	1					
17	3750-251-023-00	KEY,DRIVE SHAFT	*	1					
18	2232-607-004-00	SHAFT/SEND	*	1					
19	2232-607-028-00	GEAR/BEVEL/15/G	*	1					
20	V600-110-600-60	BEARING,RB/6006	*	1					
21	V707-140-055-00	RING,SNAP/R55	*	1					
22	V600-110-600-10	BEARING,RB/6001	*	1					
23	2232-607-005-20	GEAR/SPUR/20	*	1					
24	3565-403-008-00	KEY,CARRIER STAR	*	1					
25	3555-404-008-00	COLLAR, CARRIER	*	2					
26	2232-607-008-00	GEAR/SPUR/13/24TIMES	*	1					

FIG.122 SLIDE SYSTEM(G TYPE)

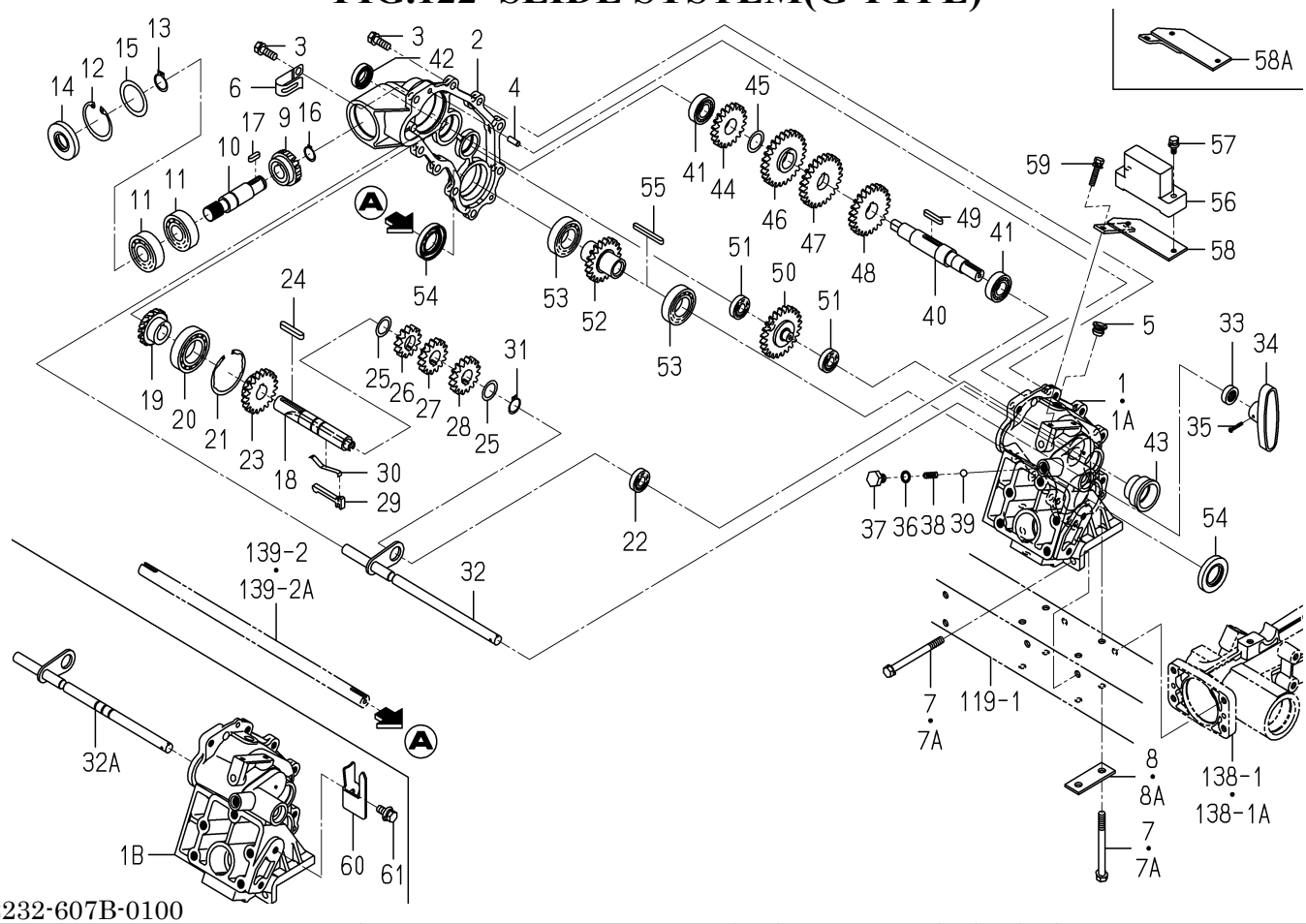

2232-607B-0100

KEY	PART CODE	DESCRIPTION	SPC	TYPE OF MODEL NP60E16		ITC	COL	GRP	REMARKS
27	2232-607-009-00	GEAR/SPUR/15/20TIMES	*	1					
28	2232-607-011-00	GEAR/SPUR/16/18TIMES	*	1					
29	2213-607-041-10	KNOCK/SEND/PZ8	*	1					
30	2213-607-042-20	SPRING/SEND/PZ8	*	1					
31	V704-140-018-00	RING,SNAP/18 C	*	1					
32	2232-607-210-00	SHIFTER/SEND COMP	*	1 -630					
32A	2232-607-240-00	SHIFTER/SEND/3 COMP	*	1 631-					
33	V744-112-220-70	SEAL,OIL/TC12227	*	1					
34	2130-610-012-00	LEVER	*	1					
35	V111-163-002-00	SCREW/M3X20	*	1					
36	V720-101-901-00	O-RING/1A,P10	*	1					
37	2201-201-002-00	BOLT/M10X12	*	1					
38	2213-422-022-00	SPRING/HC021	*	1					
39	V682-200-001-00	BALL,STEEL	*	1					
40	2232-607-012-00	SHAFT/COUNTER/SEND	*	1					
41	V600-110-600-30	BEARING,RB/6003	*	2					
42	V744-117-300-70	SEAL,OIL/TC17307	*	1					
43	2204-607-022-00	SEAL,OIL	*	1					
44	2232-607-020-00	GEAR/SPUR/20	*	1					
45	2110-325-003-00	SHIM,SAFETY CLUTCH	*	1					
46	2232-607-014-00	GEAR/SPUR/26/24TIMES	*	1					
47	2232-607-015-00	GEAR/SPUR/25/20TIMES	*	1					
48	2232-607-016-00	GEAR/SPUR/24/18TIMES	*	1					
49	1308-230-002-00	KEY	*	1					
50	2232-607-017-10	GEAR/SPUR/24	*	1					
51	V600-110-600-10	BEARING,RB/6001	*	2					
52	2232-607-018-00	GEAR/SPUR/20	*	1					
53	V600-110-600-50	BEARING,RB/6005	*	2					
54	V744-125-450-70	SEAL,OIL/TC25457	*	2					
55	2232-702-003-00	KEY/05X05X50	*	1					

FIG.122 SLIDE SYSTEM(G TYPE)

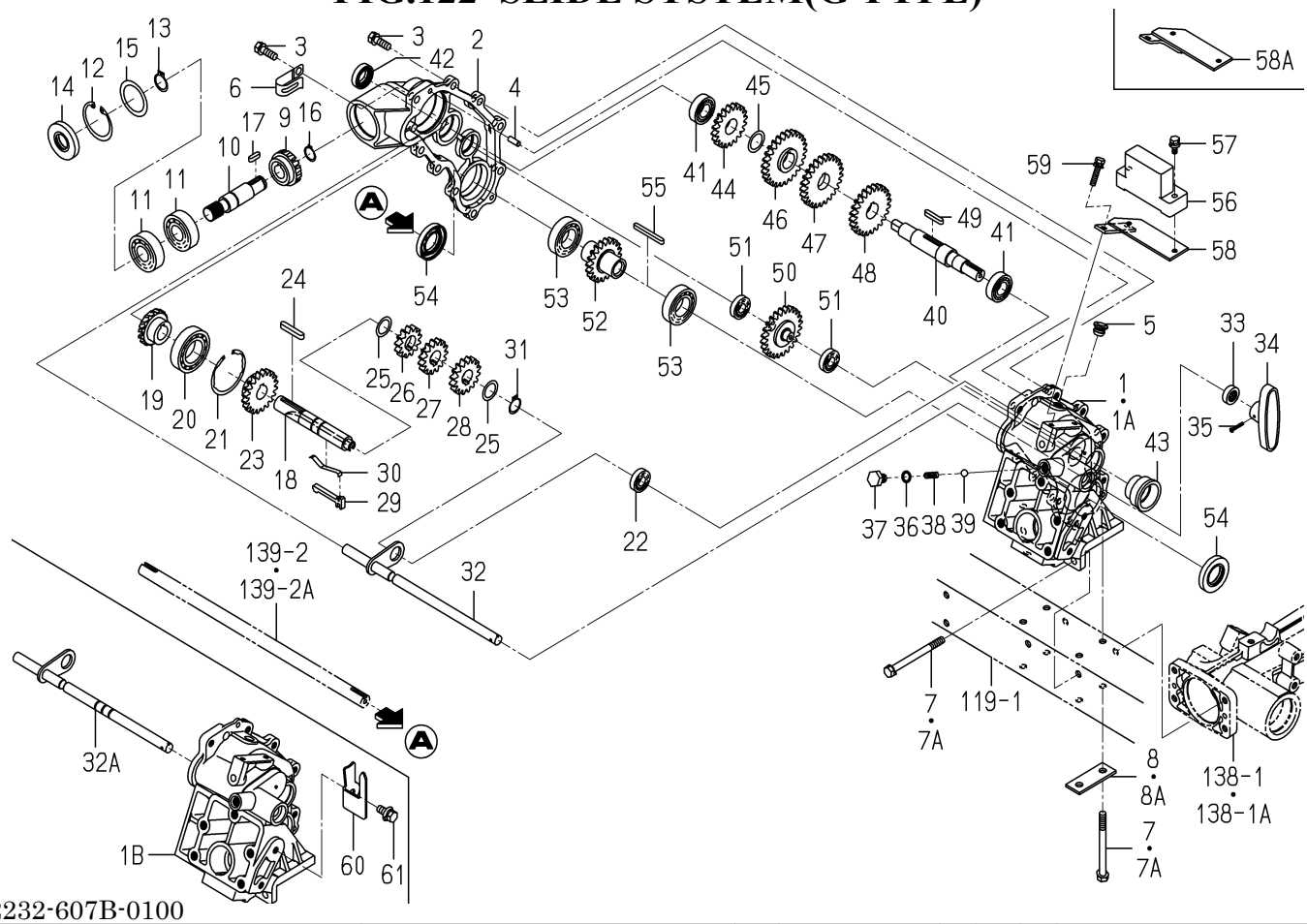

2232-607B-0100

KEY	PART CODE	DESCRIPTION	SPC	TYPE OF MODEL NP60E16		ITC	COL	GRP	REMARKS
56	1690-505-240-00	SENSOR/SLOPE ASSY	*	1					
57	V210-360-603-00	BOLT,SP/M6X30	*	2					
58	2232-607-230-00	STAY/SENSOR/SLOPE	*	1 -1207					
58A	2232-607-230-10	STAY/SENSOR/SLOPE	*	1 1208-		1			
59	V210-360-601-60	BOLT,SP/M6X16	*	2					
60	2232-607-031-00	PLATE/INDICATOR	*	1 631-					
61	V211-360-802-00	BOLT,SP/M8X20	*	1 631-					

FIG.123 CAM(LEAD)SYSTEM

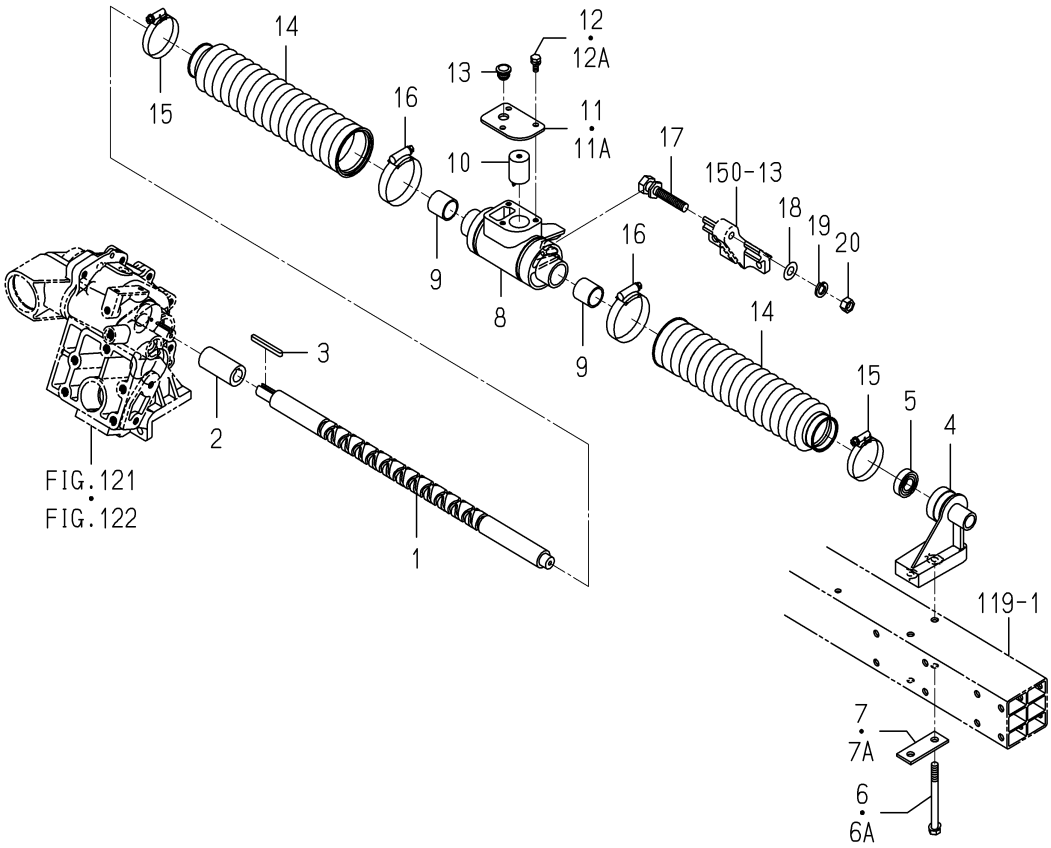

2232-608 -0100

KEY	PART CODE	DESCRIPTION	SPC	TYPE OF MODEL NP60E16		ITC	COL	GRP	REMARKS
1	2232-608-006-00	CAM/LEAD	*	1					
2	2232-608-018-00	COUPLING/DRAIVE	*	1					
3	2232-702-003-00	KEY/05X05X50	*	1					
4	2232-608-005-20	HOLDER/LEADCAM	*	1					
5	V600-150-600-20	BEARING,RB/6002SS	*	1					
6	2232-603-003-00	BOLT/M8X90	*	2 -60					
6A	2232-603-003-10	BOLT/M8X90	*	2 61-		1			
7	2232-603-002-00	PLATE/I/24X64	*	1 -60					
7A	2232-603-002-10	PLATE/I/24X64	*	1 61-		1			
8	2232-608-001-00	METAL/CAM/LEAD	*	1					
9	2232-608-007-00	BUSH/22X26X25	*	2					
10	2232-608-014-00	CATCH/LEAD	*	1					
11	2232-608-010-00	PLATE/LID	*	1 -60					
11A	2232-608-010-10	PLATE/LID	*	1 61-		1			
12	V210-260-601-60	BOLT,S/M6X16	*	3 -60					
12A	2232-608-021-00	BOLT/S/M6X16/G	*	3 61-					
13	2142-736-236-00	PLUG	*	1					
14	2232-608-008-00	BOOT/CAM/LEAD	*	2					
15	J061-132-050-00	CLAMP/WORM/32-50	*	2					
16	J061-145-060-10	CLAMP/WORM/45-60	*	2					
17	2232-608-009-00	BOLT/JOINT	*	1					
18	V410-260-010-00	WASHER,PL/M10	*	1					
19	V401-160-010-00	WASHER,SP/M10	*	1					
20	V304-260-010-00	NUT/M10	*	1					

FIG.124 CAM(FEED/SEEDLING)SYSTEM

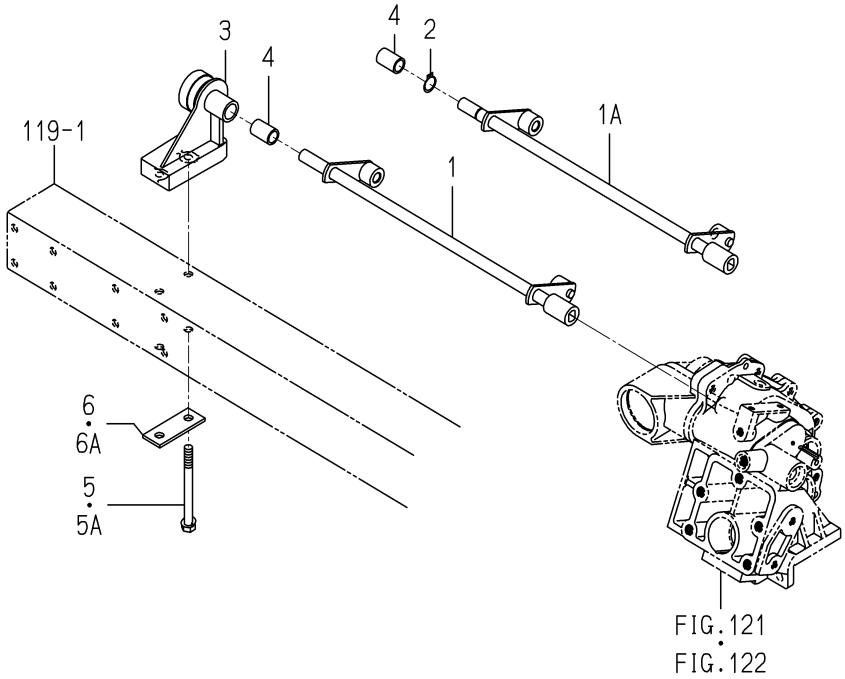

2232-612 -0100

KEY	PART CODE	DESCRIPTION	SPC	TYPE OF MODEL NP60E16		ITC	COL	GRP	REMARKS
1	2232-612-200-00	CAM/SEND/6 COMP	*	1 -60					
1A	2232-612-200-10	CAM/SEND/6 COMP	*	1 61-		1			
2	2145-774-003-00	SNAPRING	*	1 61-					
3	2232-608-005-20	HOLDER/LEADCAM	*	1					
4	2161-612-002-10	BUSH/12X16X24	*	1					
5	2232-603-003-00	BOLT/M8X90	*	2 -60					
5A	2232-603-003-10	BOLT/M8X90	*	2 61-		1			
6	2232-603-002-00	PLATE/I/24X64	*	1 -60					
6A	2232-603-002-10	PLATE/I/24X64	*	1 61-		1			

FIG.125 LEVER(DEPTH/PLANTING)SYSTEM

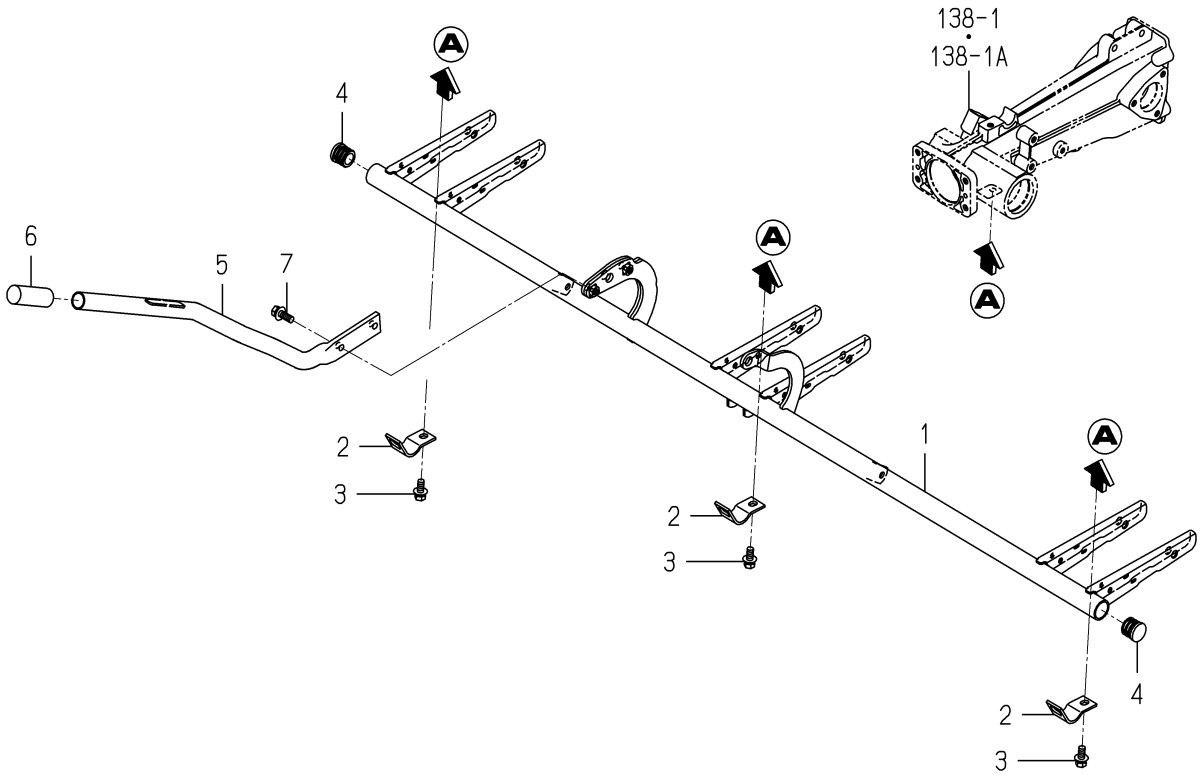

2232-614 -0100

KEY	PART CODE	DESCRIPTION	SPC	TYPE OF MODEL NP60E16		ITC	COL	GRP	REMARKS
1	2232-614-200-30	FRAME/DEPTH/6 COMP	*	1					
2	2232-614-001-00	PLATE/HOLDER/DEPTH	*	3					
3	V211-360-802-00	BOLT,SP/M8X20	*	3					
4	2232-614-003-00	CAP/24X18	*	2					
5	2232-614-210-00	LEVER/DEPTH COMP	*	1					
6	2183-613-003-00	GRIP	*	1					
7	V211-360-802-50	BOLT,SP/M8X25	*	2					

FIG.126 FLOAT(CENTER)SYSTEM

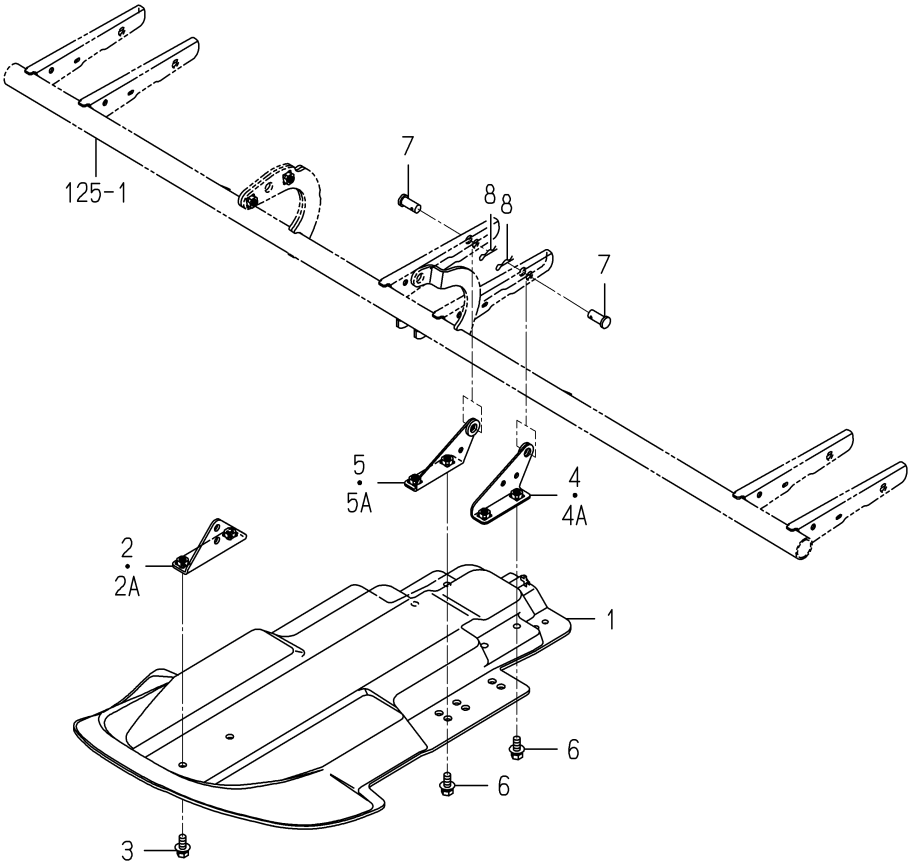

2232-616 -0100

KEY	PART CODE	DESCRIPTION	SPC	TYPE OF MODEL NP60E16		ITC	COL	GRP	REMARKS
1	2232-616-001-00	FLOAT/CENTER/6	*	1					
2	2232-616-220-10	PLATE/CENTER/FLOAT	*	1 -60					
2A	2232-616-220-20	PLATE/CENTER/FLOAT	*	1 61-		1			
3	V211-360-802-00	BOLT,SP/M8X20	*	2					
4	2232-616-200-00	STAY/CENTERFLOA COMP	*	1 -60					
4A	2232-616-200-10	STAY/CENTERFLOA COMP	*	1 61-		1			
5	2232-616-230-00	STAY/CENTERFLOA COMP	*	1 -60					
5A	2232-616-230-10	STAY/CENTERFLOA COMP	*	1 61-		1			
6	V211-360-802-00	BOLT,SP/M8X20	*	4					
7	2120-409-004-00	PIN	*	2					
8	3505-704-003-00	PIN,HAIR (10)	*	2					

FIG.127 ADJUSTMENT(ROLLING)SYSTEM

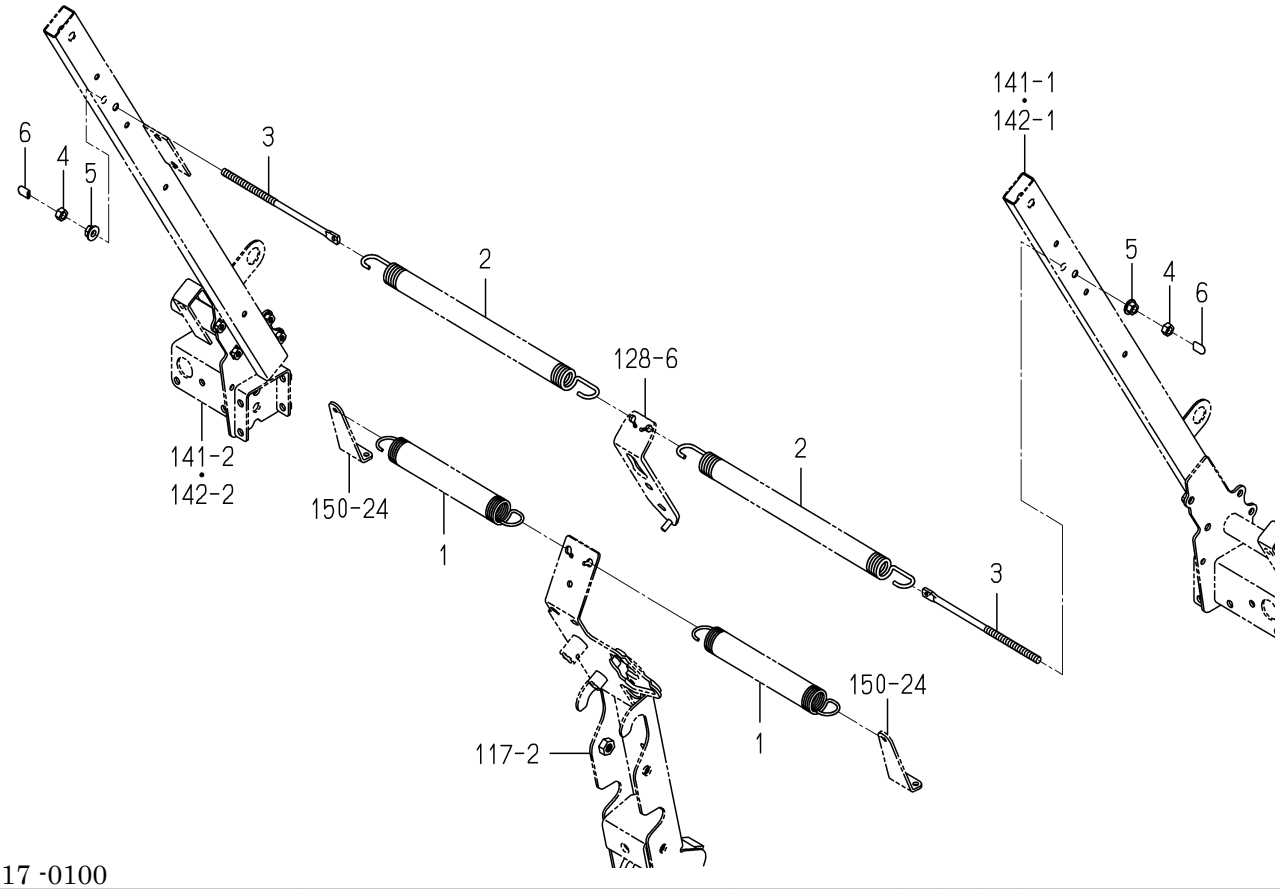

2232-617 -0100

KEY	PART CODE	DESCRIPTION	SPC	TYPE OF MODEL NP60E16		ITC	COL	GRP	REMARKS
1	2146-640-001-60	SPRING/HE232	*	2					
2	2163-617-004-00	SPRING/HE385	*	2					
3	2232-617-002-00	ROD/M8X195	*	2					
4	V304-260-008-00	NUT/M8	*	2					
5	V362-260-008-00	NUT/WASHER/M8	*	2					
6	2232-705-012-00	CAP/ROD	*	2					
				61-					

FIG.128 AUTOMATIC CONTROL(ROLLING)SYSTEM

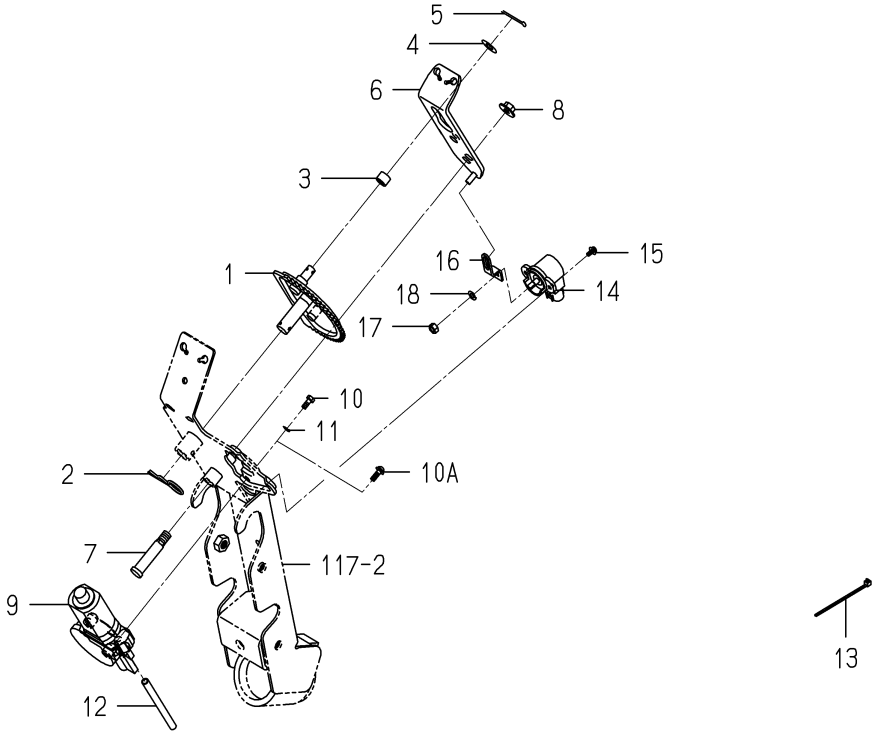

2232-618 -0100

KEY	PART CODE	DESCRIPTION	SPC	TYPE OF MODEL NP60E16		ITC	COL	GRP	REMARKS
1	2204-618-200-30	GEAR/ROLLING COMP	*	1					
2	7957-405-003-00	PIN/HAIR	*	1					
3	2204-618-002-00	COLLER/10X14X10	*	1					
4	V411-260-010-00	WASHER,PL/M10	*	1					
5	V500-163-002-00	PIN,SPLIT/3X20	*	1					
6	2232-618-220-00	PLATE/ROLLING COMP	*	1					
7	2204-618-008-00	PIN(RORING)	*	1					
8	V363-260-010-00	NUT/WASHER/M10	*	1					
9	2194-543-200-00	MOTER	*	1					
10	V200-260-501-20	BOLT/M5X12	*	3 -60					
10A	V120-365-001-60	SCREW,SP/M5X16	*	3 61-					
11	V401-160-005-00	WASHER,SP/M5	*	3 -60					
12	2194-543-001-00	TUBE/100	*	1					
13	2132-545-008-00	WIRE BAND(92)	*	1					
14	1729-662-340-00	SENSOR/ANGLE/110/R	*	1					
15	V120-364-001-00	SCREW,SP/M4X10	*	2					
16	2232-618-004-00	SENSORARM/ROLLING	*	1					
17	V301-260-006-00	NUT/M6	*	1					
18	V401-160-006-00	WASHER,SP/M6	*	1					

FIG.129 RAKE SYSTEM

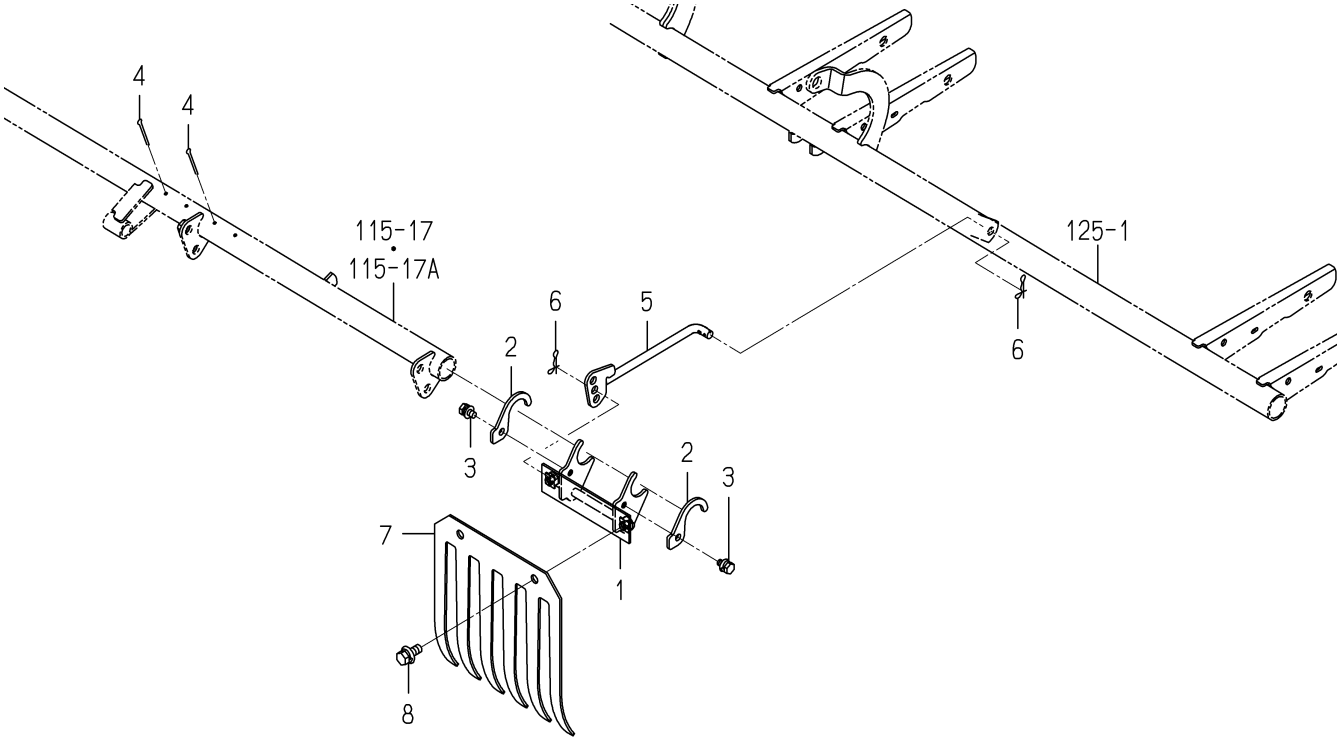

2232-619 -0100

KEY	PART CODE	DESCRIPTION	SPC	TYPE OF MODEL NP60E16		ITC	COL	GRP	REMARKS
1	2232-619-240-00	RAKE/CENTER COMP	*	2					
2	2232-619-002-00	PLATE/HOLDER	*	4					
3	V210-360-601-20	BOLT,SP/M6X12	*	4					
4	2204-582-015-00	PIN,SPLIT/3X30/SUS	*	4					
5	2232-619-260-10	ROD/LAKE COMP	*	2					
6	2161-735-006-00	PIN/STOPPER/8	*	4					
7	2232-619-003-20	RAKE/CENTER	*	2					
8	V120-368-002-00	SCREW,SP/M8X20	*	4					

FIG.130 DRIVE(FERTILIZER)SYSTEM(GF TYPE)(1/2)

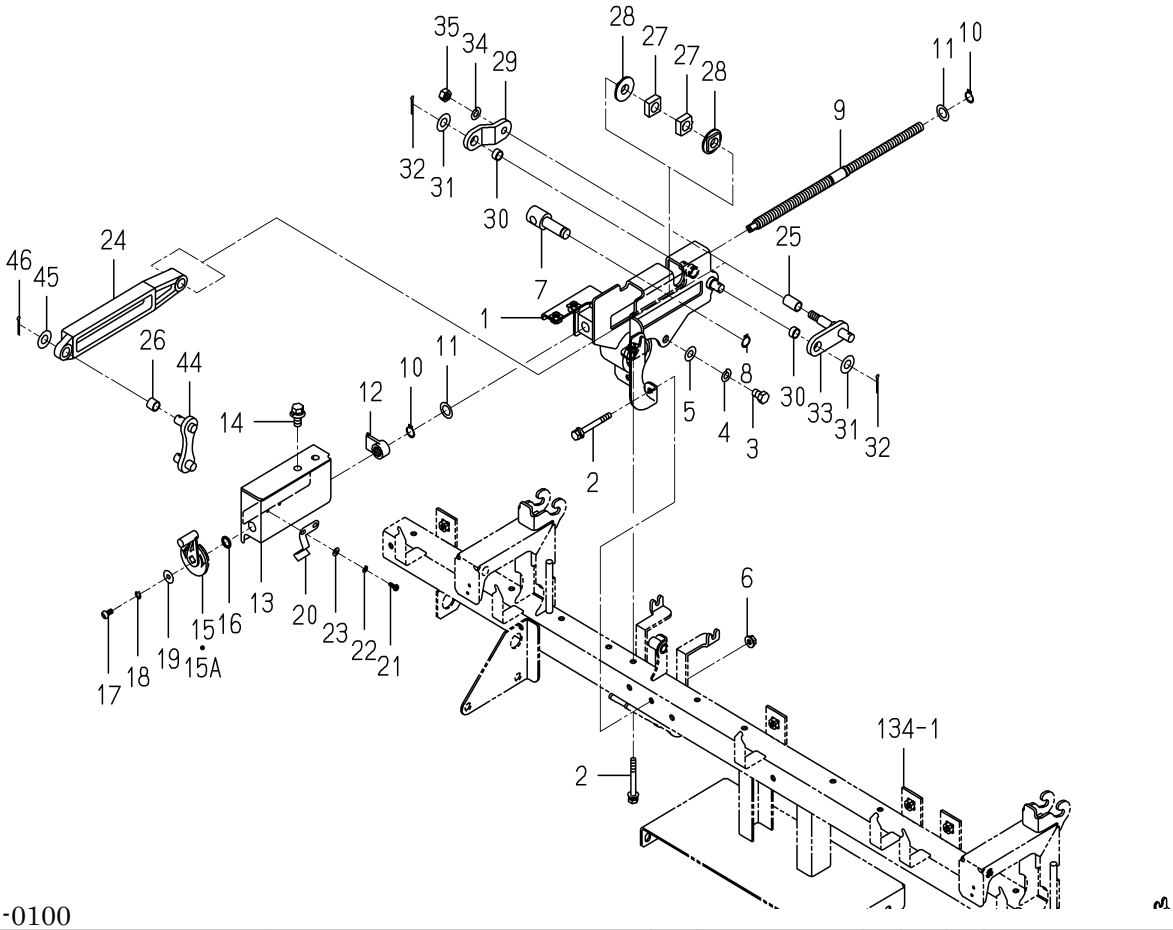

2232-646 -0100

KEY	PART CODE	DESCRIPTION	SPC	TYPE OF MODEL NP60E16		ITC	COL	GRP	REMARKS
1	2232-645-320-40	PLATE/ADJUST COMP	*	1					
2	2232-645-022-00	BOLT/SPM6X55/G	*	3					
3	V201-700-801-20	BOLT,SUS/M8X12	*	1					
4	V401-700-008-00	WASHER,SP/M8	*	1					
5	V411-700-008-00	WASHER,PL/M8	*	1					
6	2204-803-068-00	NUT/WASER/M6/SUS	*	2					
7	2232-645-015-10	PIVOT/DIAL	*	1					
8	2145-774-003-00	SNAPRING	*	1					
9	2232-645-011-10	ROD/DIALADJUST	*	1					
10	2145-774-003-00	SNAPRING	*	2					
11	8836-703-055-00	WASHER/M12X20X01	*	2					
12	2232-645-013-00	NUT/ADJUST	*	1					
13	2232-645-018-00	GUIDE/ADJUSUT	*	1					
14	2232-645-023-00	BOLT/SP/M8X20/G	*	2					
15	2232-645-007-00	HANDLE/ADJUST	*	1 -60					
15A	2232-645-007-10	HANDLE/ADJUST	*	1 61-		1			
16	V720-101-901-00	O-RING/1A,P10	*	1 579-					
17	V111-705-001-00	SCREW/M5X10	*	1					
18	V401-700-005-00	WASHER,SP/M5	*	1					
19	8843-404-009-00	WASHER/05X16X01	*	1					
20	8843-404-006-00	SPRING	*	1 -1187					
20A	8843-404-006-10	SPRING	*	1 1188-		1			
21	8844-405-028-00	SCREW/04	*	2					
22	V401-700-004-00	WASHER,SP/M4	*	2					
23	V411-700-004-00	WASHER,PL/M4	*	2					
24	2232-645-012-00	ARM/ADJUST	*	1					
25	3924-312-003-00	BUSH/10X12X20	*	1					
26	2232-645-026-00	BUSH/10X12X10	*	1					
27	2232-645-014-20	HUB/12X08	*	2					
28	2232-645-017-00	HUB/12X05	*	2					

FIG.130 DRIVE(FERTILIZER)SYSTEM(GF TYPE)(2/2)

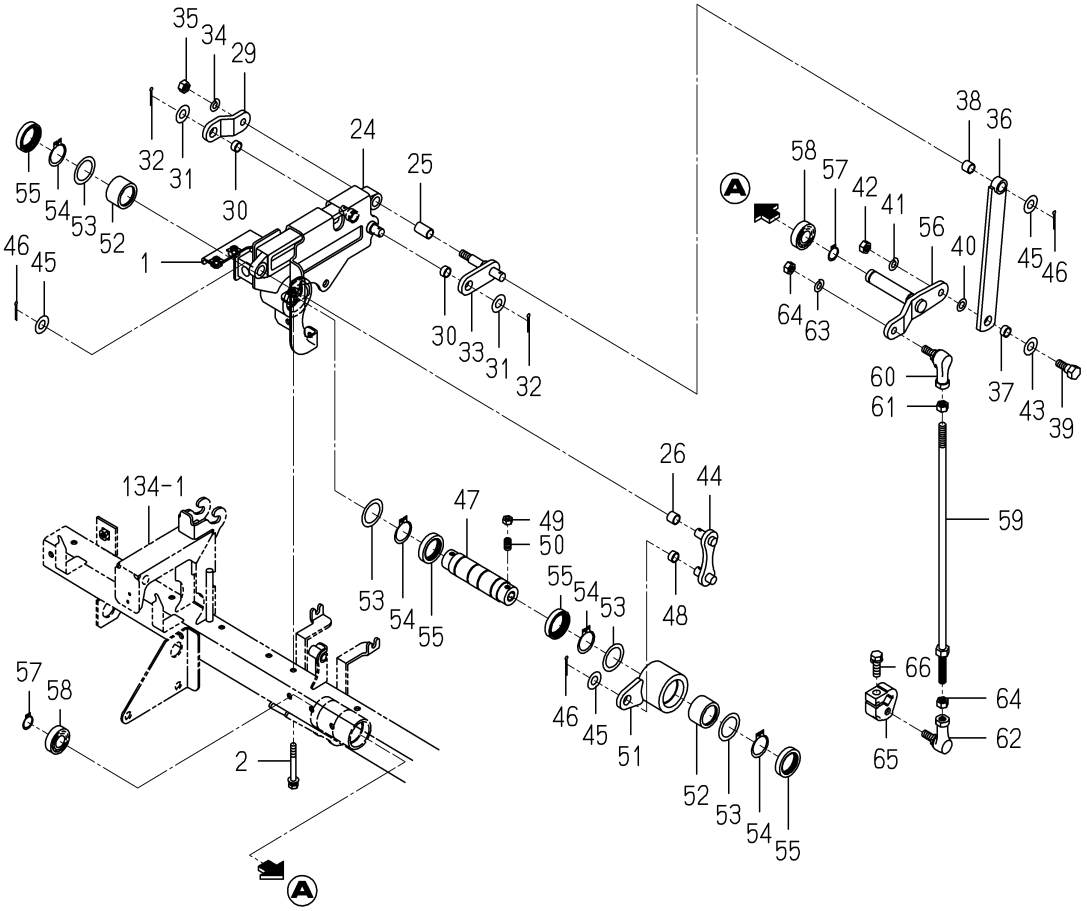

2232-646 -0100

KEY	PART CODE	DESCRIPTION	SPC	TYPE OF MODEL NP60E16		ITC	COL	GRP	REMARKS
29	2232-645-016-00	PLATE/Z/24X40	*	1					
30	2232-645-025-00	BUSH/10X12X06	*	2					
31	V411-700-010-00	WASHER,PL/M10	*	2					
32	2188-208-015-00	PIN,COTTER/2.5X20/SU	*	2					
33	2232-645-420-00	SHAFT/COUNTER COMP	*	1					
34	V401-700-008-00	WASHER,SP/M8	*	1					
35	V304-700-008-00	NUT,SUS/M8	*	1					
36	2232-645-330-00	ARM/DRIVE COMP	*	1					
37	2232-645-025-00	BUSH/10X12X06	*	1					
38	2232-645-026-00	BUSH/10X12X10	*	1					
39	2232-645-006-10	PIN/10X30	*	1					
40	2183-880-018-00	SIM/8X16X0.3	*	1					
41	V401-700-008-00	WASHER,SP/M8	*	1					
42	V304-700-008-00	NUT,SUS/M8	*	1					
43	V411-700-010-00	WASHER,PL/M10	*	1					
44	2232-645-350-00	ARM/COUNTER/50 COMP	*	1					
45	V411-260-010-00	WASHER,PL/M10	*	3					
46	2188-208-015-00	PIN,COTTER/2.5X20/SU	*	3					
47	8843-704-004-00	HUB/ROLLER CLUTCH	*	1					
48	2232-645-025-00	BUSH/10X12X06	*	1					
49	V301-700-006-00	NUT,SUS/M6	*	2					
50	V180-446-001-20	SCREW,SET/M6X12	*	2					
51	2232-676-210-00	HUB/ROLLER CLUTCH/NP	*	1					
52	8843-704-251-00	CLUTCH,ROLLER/FC-25	*	2					
53	8843-704-005-00	WASHER/25X35X01	*	4					
54	V704-140-025-00	RING,SNAP/25 C	*	4					
55	V744-125-350-70	SEAL,OIL/TC25357	*	4					
56	2232-646-210-00	ARM/DRIBVE/NP COMP	*	1					
57	2145-770-014-00	RING, SNAP	*	2					
58	V600-150-600-20	BEARING,RB/6002SS	*	2					

FIG.130 DRIVE(FERTILIZER)SYSTEM(GF TYPE)(2/2)

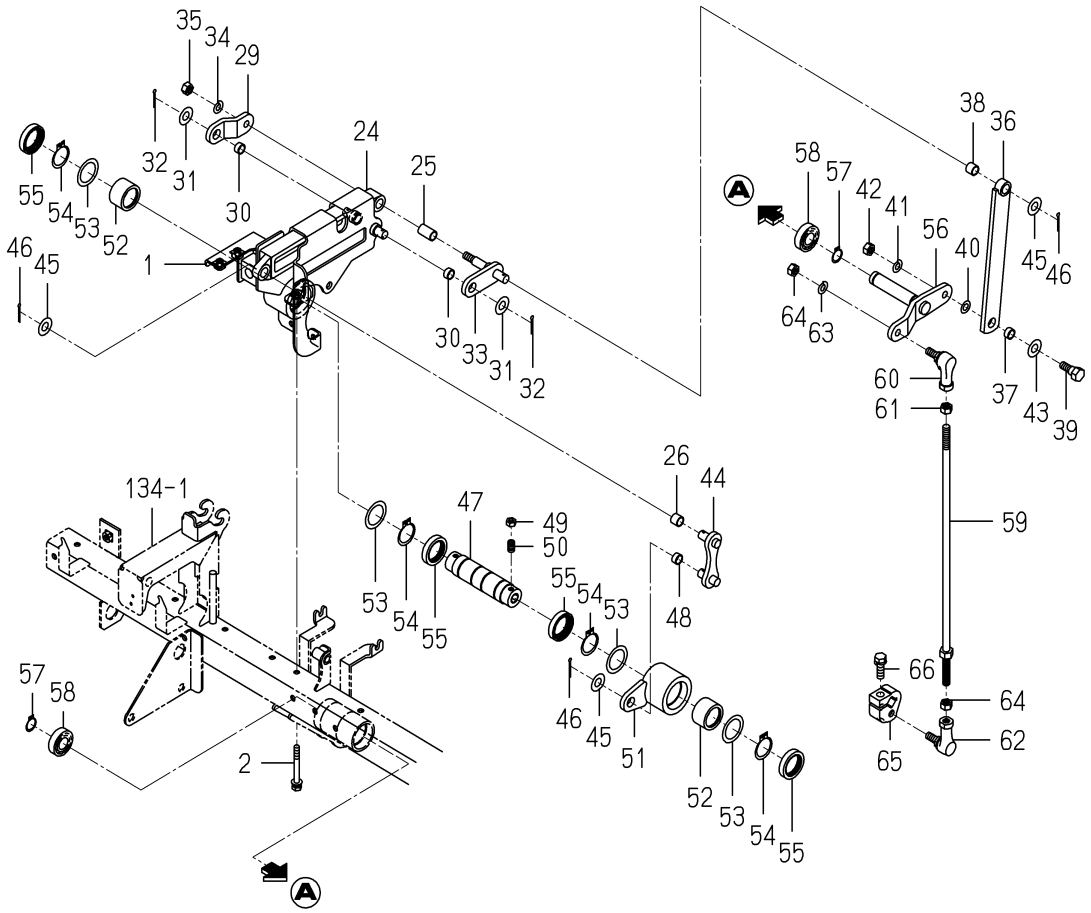

2232-646 -0100

KEY	PART CODE	DESCRIPTION	SPC	TYPE OF MODEL NP60E16		ITC	COL	GRP	REMARKS
59	2232-645-310-00	ROD/DRIVE/NP COMP	*	1					
60	1560-695-022-00	JOINT BALL M08LH	*	1					
61	1560-132-007-30	NUT/LH/M08	*	1					
62	1560-695-021-00	JOINT BALL M08RH	*	1					
63	V401-160-008-00	WASHER,SP/M8	*	1					
64	V304-260-008-00	NUT/M8	*	2					
65	2232-645-019-10	ARM/FERTILIZEDRIVE	*	1					
66	V211-560-802-50	BOLT,S/M8X25/7T	*	1					

FIG.131 DRIVE(FERTILIZER)SYSTEM(DF TYPE)(1/2)

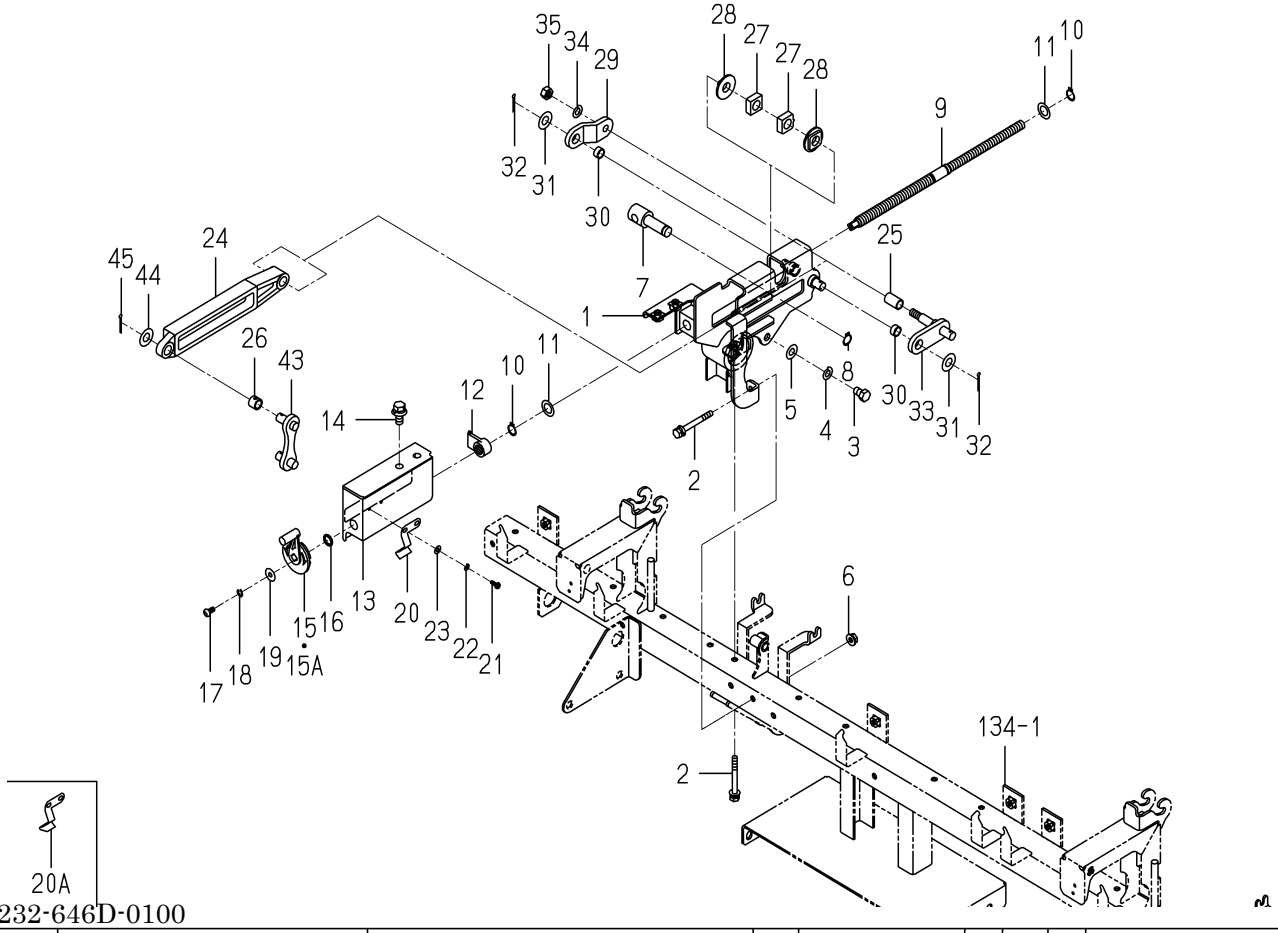

2232-646D-0100

KEY	PART CODE	DESCRIPTION	SPC	TYPE OF MODEL NP60E16		ITC	COL	GRP	REMARKS
1	2233-648-320-00	PLATE/ADJUST/D COMP	*	1					
2	2232-645-022-00	BOLT/SPM6X55/G	*	3					
3	V201-700-801-20	BOLT,SUS/M8X12	*	1					
4	V401-700-008-00	WASHER,SP/M8	*	1					
5	V411-700-008-00	WASHER,PL/M8	*	1					
6	2204-803-068-00	NUT/WASER/M6/SUS	*	2					
7	2232-645-015-10	PIVOT/DIAL	*	1					
8	2145-774-003-00	SNAPRING	*	1					
9	2232-645-011-10	ROD/DIALADJUST	*	1					
10	2145-774-003-00	SNAPRING	*	2					
11	8836-703-055-00	WASHER/M12X20X01	*	2					
12	2232-645-013-00	NUT/ADJUST	*	1					
13	2232-645-018-00	GUIDE/ADJUSUT	*	1					
14	2232-645-023-00	BOLT/SP/M8X20/G	*	2					
15	2232-645-007-00	HANDLE/ADJUST	*	1 -60					
15A	2232-645-007-10	HANDLE/ADJUST	*	1 61-		1			
16	V720-101-901-00	O-RING/1A,P10	*	1 579-					
17	V111-705-001-00	SCREW/M5X10	*	1					
18	V401-700-005-00	WASHER,SP/M5	*	1					
19	8843-404-009-00	WASHER/05X16X01	*	1					
20	8843-404-006-00	SPRING	*	1 -1187					
20A	8843-404-006-10	SPRING	*	1 1188-		1			
21	8844-405-028-00	SCREW/04	*	2					
22	V401-700-004-00	WASHER,SP/M4	*	2					
23	V411-700-004-00	WASHER,PL/M4	*	2					
24	2233-648-012-00	ARM/ADJUST/D	*	1					
25	3924-312-003-00	BUSH/10X12X20	*	1					
26	2233-648-001-00	BUSH/10X13X10	*	1					
27	2232-645-014-20	HUB/12X08	*	2					
28	2232-645-017-00	HUB/12X05	*	2					

FIG.131 DRIVE(FERTILIZER)SYSTEM(DF TYPE)(2/2)

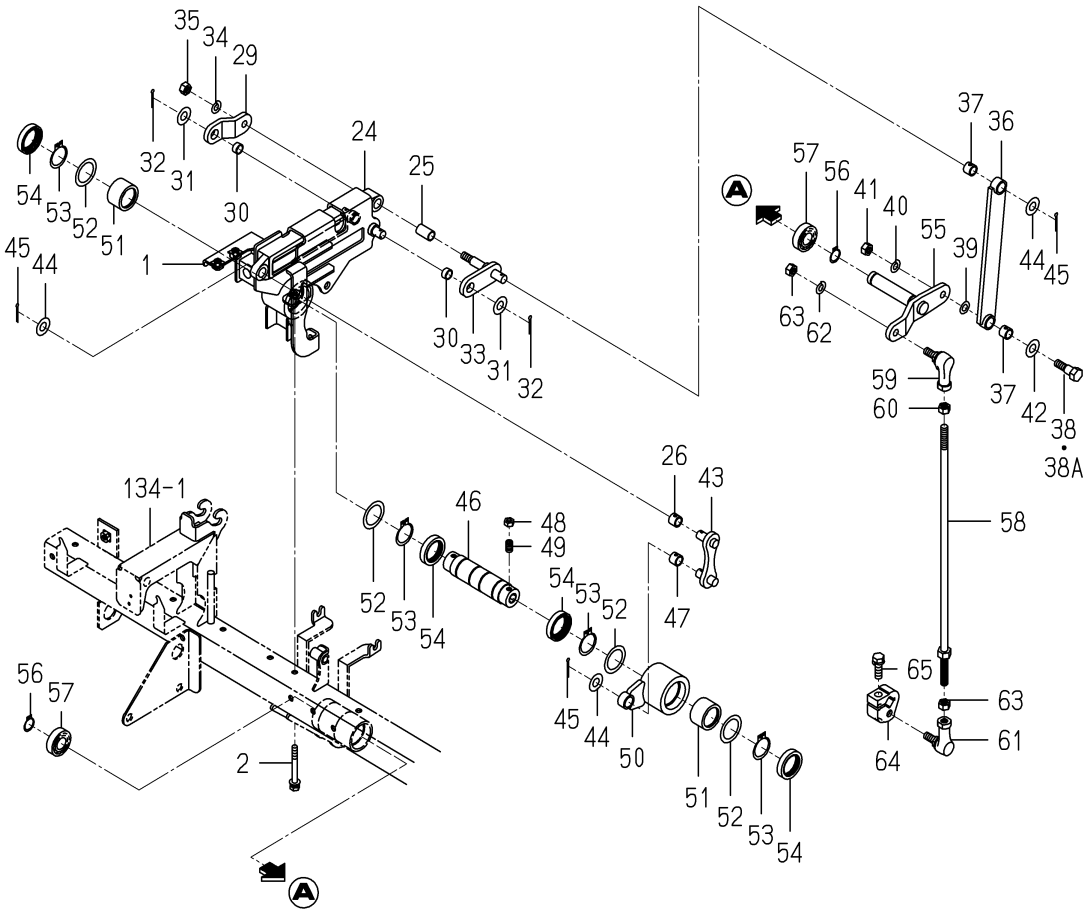

2232-646D-0100

KEY	PART CODE	DESCRIPTION	SPC	TYPE OF MODEL NP60E16		ITC	COL	GRP	REMARKS
29	2232-645-016-00	PLATE/Z/24X40	*	1					
30	2232-645-025-00	BUSH/10X12X06	*	2					
31	V411-700-010-00	WASHER,PL/M10	*	2					
32	2188-208-015-00	PIN,COTTER/2.5X20/SU	*	2					
33	2232-645-420-00	SHAFT/COUNTER COMP	*	1					
34	V401-700-008-00	WASHER,SP/M8	*	1					
35	V304-700-008-00	NUT,SUS/M8	*	1					
36	2233-648-330-00	ARM/DRIVE/D COMP	*	1					
37	2233-648-001-00	BUSH/10X13X10	*	2					
38	2233-648-006-00	PIN/10X36	*	1 -60					
38A	2233-648-006-10	PIN/10X36	*	1 61-		1			
39	2183-880-018-00	SIM/8X16X0.3	*	1					
40	V401-700-008-00	WASHER,SP/M8	*	1					
41	V304-700-008-00	NUT,SUS/M8	*	1					
42	V411-700-010-00	WASHER,PL/M10	*	1					
43	2233-648-350-00	ARM/COUNTER/50/ COMP	*	1					
44	V411-260-010-00	WASHER,PL/M10	*	3					
45	2188-208-015-00	PIN,COTTER/2.5X20/SU	*	3					
46	8843-704-004-00	HUB/ROLLER CLUTCH	*	1					
47	2233-648-001-00	BUSH/10X13X10	*	1					
48	V301-700-006-00	NUT,SUS/M6	*	2					
49	V180-446-001-20	SCREW,SET/M6X12	*	2					
50	2233-678-220-00	HUB/ROLLER CLUTCH/NP	*	1					
51	8843-704-251-00	CLUTCH,ROLLER/FC-25	*	2					
52	8843-704-005-00	WASHER/25X35X01	*	4					
53	V704-140-025-00	RING,SNAP/25 C	*	4					
54	V744-125-350-70	SEAL,OIL/TC25357	*	4					
55	2232-646-210-00	ARM/DRIBVE/NP COMP	*	1					
56	2145-770-014-00	RING, SNAP	*	2					
57	V600-150-600-20	BEARING,RB/6002SS	*	2					

FIG.131 DRIVE(FERTILIZER)SYSTEM(DF TYPE)(2/2)

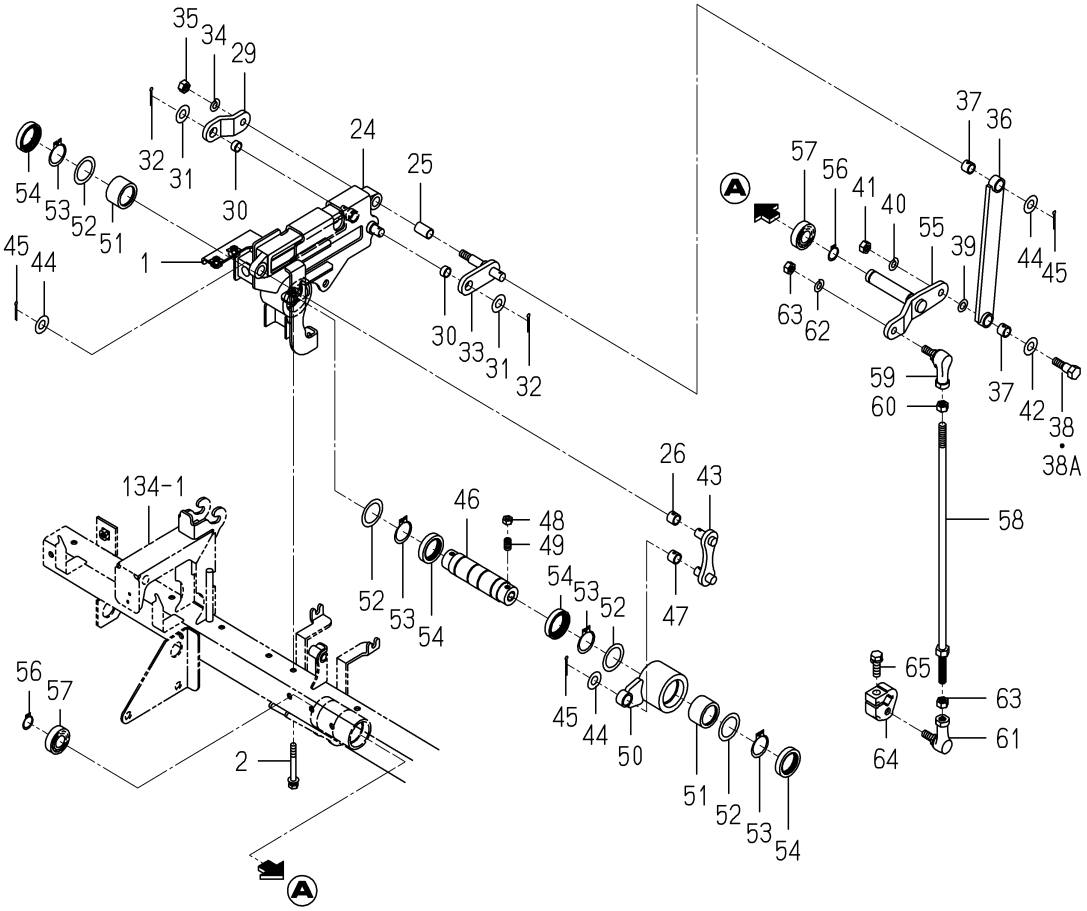

2232-646D-0100

KEY	PART CODE	DESCRIPTION	SPC	TYPE OF MODEL NP60E16		ITC	COL	GRP	REMARKS
58	2232-645-310-00	ROD/DRIVE/NP COMP	*	1					
59	1560-695-022-00	JOINT BALL M08LH	*	1					
60	1560-132-007-30	NUT/LH/M08	*	1					
61	1560-695-021-00	JOINT BALL M08RH	*	1					
62	V401-160-008-00	WASHER,SP/M8	*	1					
63	V304-260-008-00	NUT/M8	*	2					
64	2232-645-019-10	ARM/FERTILIZEDRIVE	*	1					
65	V211-560-802-50	BOLT,S/M8X25/7T	*	1					

FIG.132 HARNESS,SENSOR&SWITCH(FERTILIZER) SYSTEM(F TYPE)

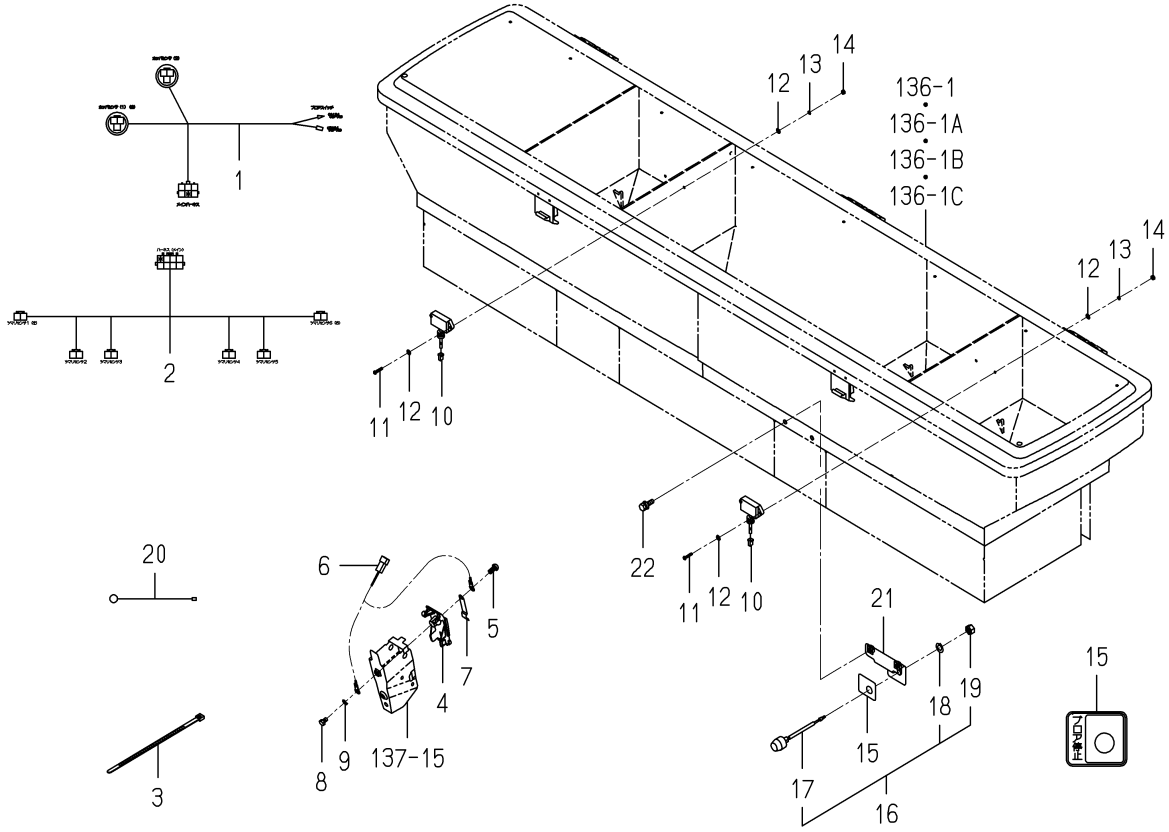

2232-652A-0100

KEY	PART CODE	DESCRIPTION	SPC	TYPE OF MODEL NP60E16		ITC	COL	GRP	REMARKS
1	2232-652-210-00	HARNESS/HOPPER/ ASSY	*	1					
2	2232-652-230-00	HARNESS/BLOCK SENSOR	*	1					
3	1376-402-003-00	BAND,WIRE/140	*	1					
4	2232-651-002-00	COVER/DICTHER/NP	*	6					
5	8836-601-011-00	SCREW,TAPPING	*	6					
6	8844-535-002-00	HARNESS/SENCER/PZ	*	6					
7	2232-651-003-00	SENSOR/CLOGGED/NP	*	6					
8	2513-801-042-00	BOLT	*	6					
9	V401-700-005-00	WASHER,SP/M5	*	6					
10	8842-535-250-10	SENSOR,HOPPPER	*	2					
11	V111-703-001-60	SCREW/M3X16	*	4					
12	V411-700-003-00	WASHER,PL/M3	*	8					
13	V401-700-003-00	WASHER,SP/M3	*	4					
14	V301-700-003-00	NUT,SUS/M3	*	4					
15	2232-651-004-00	LABEL/SWITCH/E16	*	1					
16	2145-542-230-00	SWITCH,PUSH	*	1					
17	2145-542-232-10	BOOT	*	1					
18	V401-160-008-00	WASHER,SP/M8	*	1					
19	V335-260-008-00	NUT/M8	*	1					
20	8836-502-203-00	HARNESS/SWGND	*	1					
21	2232-686-300-10	STAY/SWITCH COMP	*	1					
22	2232-645-021-00	BOLT/SP/M6X20/G	*	2					

FIG.133 AIR CHAMBER(FERTILIZER)SYSTEM(F TYPE)(1/2)

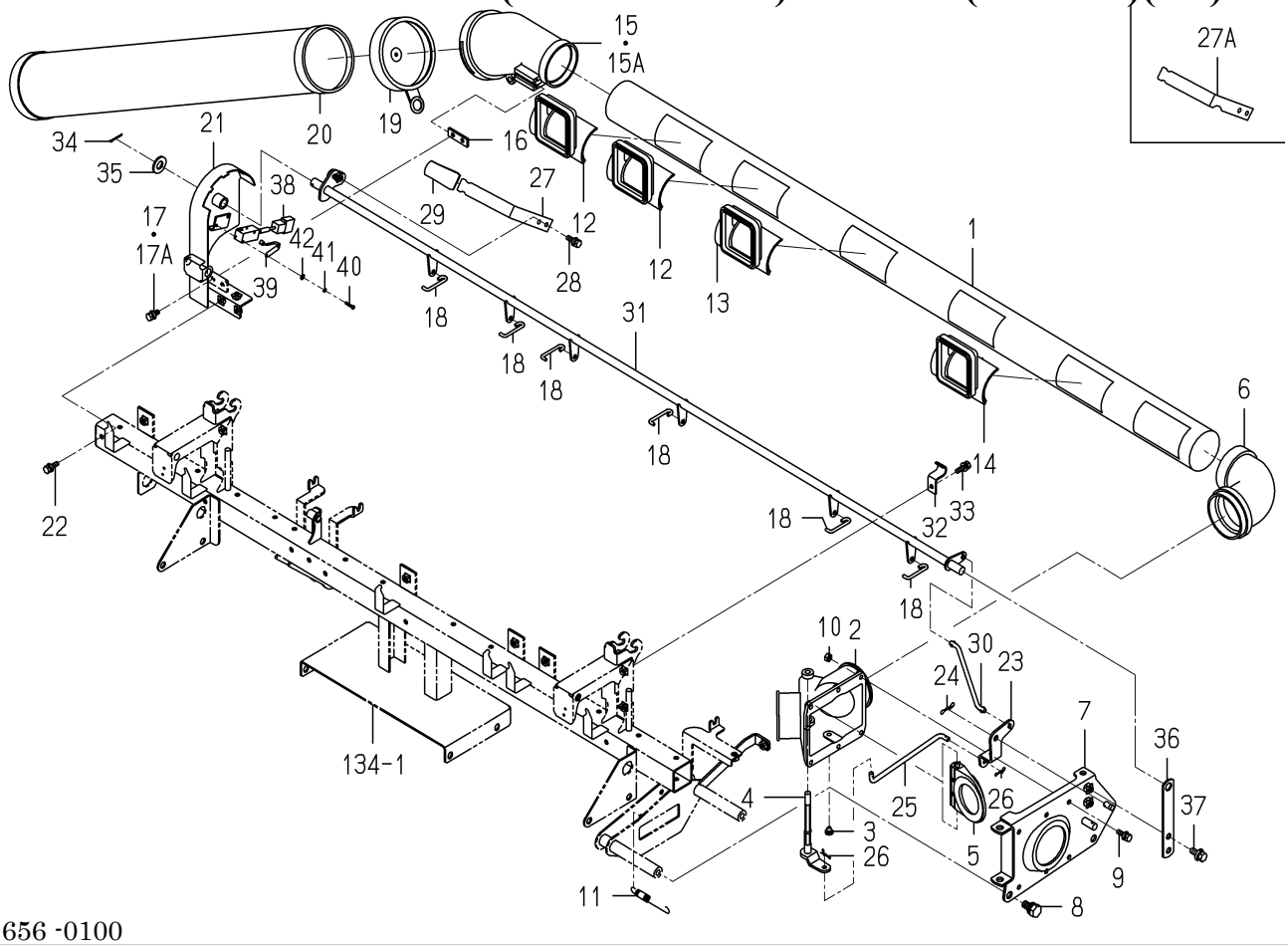

2232-656 -0100

KEY	PART CODE	DESCRIPTION	SPC	TYPE OF MODEL NP60E16		ITC	COL	GRP	REMARKS
1	2232-656-005-10	TUBE/DISCHARGE/6	*	1					
2	2232-655-002-00	CASE/SUTTER	*	1					
3	8842-505-007-00	CAP,SHUTTER	*	1					
4	2232-655-008-00	SUTTERCHANGE	*	1					
5	2232-655-001-00	SUTTER	*	1					
6	2232-655-003-00	JOINT/DISCHARGE	*	1					
7	2232-665-500-10	STAY/AIRCHAMBER COMP	*	1					
8	8842-505-035-00	BOLT/M10X20	*	2					
9	2232-645-021-00	BOLT/SP/M6X20/G	*	6					
10	8842-505-032-00	NUT/M6	*	6					
11	8842-505-019-00	SPRING/HE079	*	1					
12	2232-655-004-00	BOOT/DISCHARGE	*	2					
13	2232-655-015-00	BOOT/DISCHARGE/RH	*	3					
14	2232-655-016-00	BOOT/DISCHARGE/C	*	1					
15	2232-655-006-00	DUCT/DISCHARGE	*	1 -60					
15A	2232-655-006-10	DUCT/DISCHARGE	*	1 61-		1			
16	2232-655-007-00	PLATE/I/14X40	*	1					
17	2232-645-021-00	BOLT/SP/M6X20/G	*	2 -60					
17A	8843-534-002-00	BOLT/M6X16/SP/SUS	*	2 61-					
18	2232-656-020-00	ROD/SHUTTER	*	6					
19	8842-515-015-00	CAP,DUCT/EXHAUST	*	1					
20	8843-514-300-00	REMAINDER/SHOOT COMP	*	1					
21	2232-655-260-10	PANEL/DISCHARGE COMP	*	1			6G		
22	2232-645-021-00	BOLT/SP/M6X20/G	*	3					
23	2232-655-009-00	ARM/DISCHARGE	*	1					
24	2161-735-006-00	PIN/STOPPER/8	*	1					
25	2232-655-010-10	ROD/DISCHARGE	*	1					
26	2161-735-005-00	PIN	*	2					
27	2232-655-012-00	LEVER/DISCHARGE	*	1 -60					
27A	2232-655-012-10	LEVER/DISCHARGE	*	1 61-		1			

FIG.133 AIR CHAMBER(FERTILIZER)SYSTEM(F TYPE)(2/2)

28~42-PLEASE SEE 1/2 PAGE

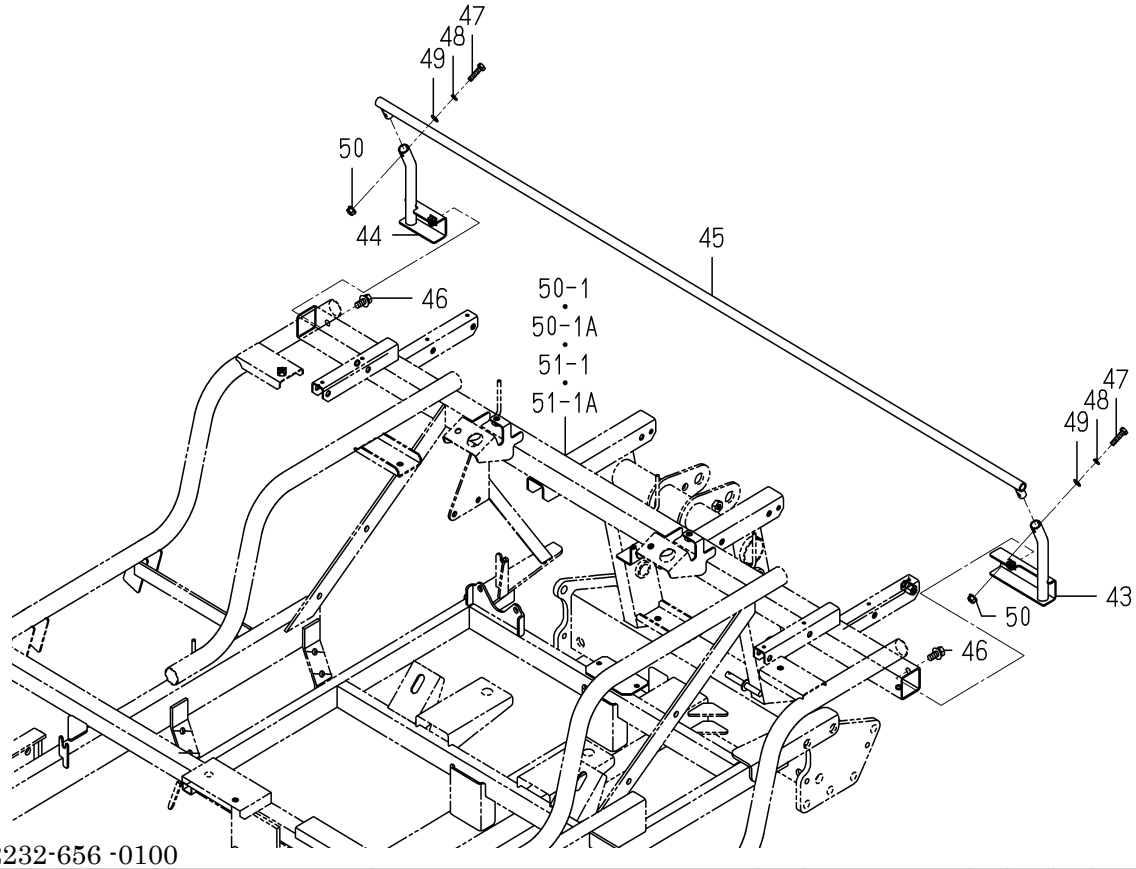

2232-656 -0100

KEY	PART CODE	DESCRIPTION	SPC	TYPE OF MODEL NP60E16		ITC	COL	GRP	REMARKS
28	2232-645-021-00	BOLT/SP/M6X20/G	*	1					
29	2145-751-004-00	GRIP	*	1					
30	2232-655-011-10	ROD/COUNTER/DISCHARG	*	1					
31	2232-656-400-00	SHAFT/DISCHARGE/6	*	1			7F		
32	2232-656-022-00	HOLDDER/DISCHARGE	*	2					
33	2232-645-021-00	BOLT/SP/M6X20/G	*	2					
34	2188-208-015-00	PIN,COTTER/2.5X20/SU	*	1					
35	V411-700-012-00	WASHER,PL/M12	*	1					
36	2232-656-021-00	HOLDDER/DISCHARGE/SI	*	1					
37	2232-645-023-00	BOLT/SP/M8X20/G	*	2					
38	3807-836-350-00	SWITCH ASSY	*	1					
39	3807-836-400-00	ACTUATOR ASSY	*	1					
40	V111-163-001-60	SCREW/M3X16	*	2					
41	V401-160-003-00	WASHER,SP/M3	*	2					
42	V411-260-003-00	WASHER,PL/M3	*	2					
43	2232-696-100-10	STAY/DUCT GUARD/6/LH	*	1					
44	2232-696-110-10	STAY/DUCT GUARD/6/RH	*	1					
45	2232-696-120-10	GUARD/DUCT/6 COMP	*	1					
46	2232-645-023-00	BOLT/SP/M8X20/G	*	2					
47	V200-700-602-50	BOLT,SUS/M6X25	*	2					
48	V401-700-006-00	WASHER,SP/M6	*	2					
49	V411-700-006-00	WASHER,PL/M6	*	2					
50	2204-803-068-00	NUT/WASER/M6/SUS	*	2					

FIG.134 FRAME(FERTILIZER)SYSTEM(F TYPE)(1/2)

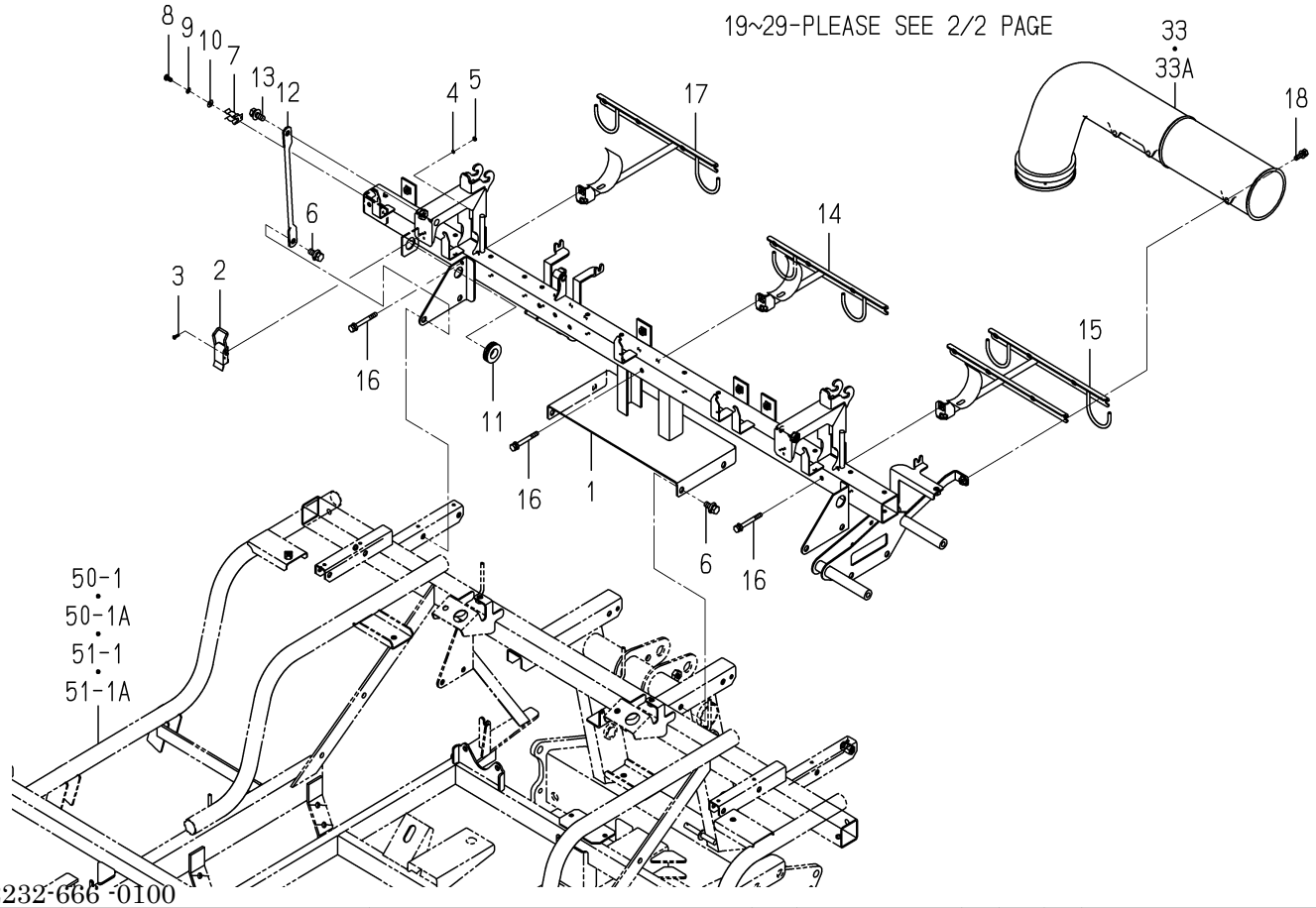

2232-666 -0100

KEY	PART CODE	DESCRIPTION	SPC	TYPE OF MODEL NP60E16		ITC	COL	GRP	REMARKS
1	2232-666-250-40	FRAME/6/NP COMP	*	1		1			
2	8836-508-001-00	HOOK	*	2					
3	8836-506-005-00	SCREW,TAPPING/M3	*	4					
4	V401-700-003-00	WASHER,SP/M3	*	4					
5	V301-700-003-00	NUT,SUS/M3	*	4					
6	V211-360-802-00	BOLT,SP/M8X20	*	8					
7	2194-508-016-00	HOOK/BONNET/PQ	*	1					
8	V111-705-001-00	SCREW/M5X10	*	1					
9	V401-700-005-00	WASHER,SP/M5	*	1					
10	V411-700-005-00	WASHER,PL/M5	*	1					
11	1575-616-005-00	GROMMET/17X21X3	*	1					
12	2232-665-001-10	ROD/221	*	2		1			
13	2232-645-023-00	BOLT/SP/M8X20/G	*	2					
14	2232-692-220-20	STAY/DUCT/REAR COMP	*	1					
15	2232-692-250-00	STAY/DUCT/REAR/LH	*	1					
16	2232-645-022-00	BOLT/SPM6X55/G	*	3					
17	2232-692-260-00	STAY/DUCT/REAR/RH	*	1					
18	2232-645-021-00	BOLT/SP/M6X20/G	*	1					
19	8842-625-400-20	BLOWER/FG ASSY	*	1					
20	8843-624-205-00	CAP	*	1					
21	8842-625-409-00	BOLT/M6X2	*	6					
22	8842-625-408-00	SCREW/M3X	*	9					
23	V301-700-003-00	NUT,SUS/M3	*	9					
24	8842-625-404-00	CASING/INNER	*	1					
25	8842-625-405-00	CASING/OUTER/PG	*	1					
26	8842-625-406-00	FAN	*	1					
27	8842-625-004-00	SPRING/BRUSH/FG	*	2					
28	2232-665-510-00	STAY/BLOWER COMP	*	1 -60					
28A	2232-665-510-10	STAY/BLOWER COMP	*	1 61-		1			
29	2145-751-004-00	GRIP	*	1 -60					

FIG.134 FRAME(FERTILIZER)SYSTEM(F TYPE)(2/2)

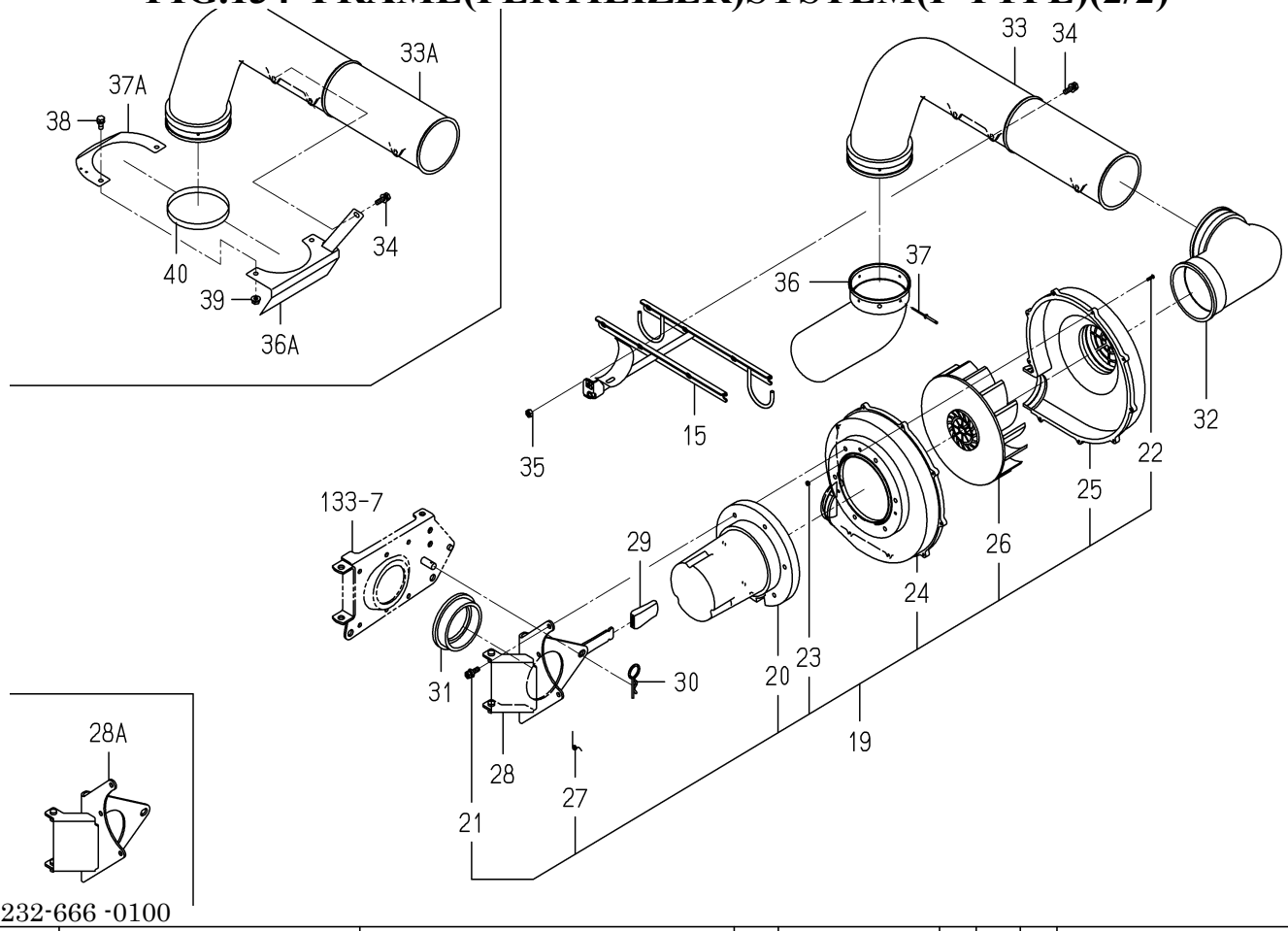

2232-666 -0100

KEY	PART CODE	DESCRIPTION	SPC	TYPE OF MODEL NP60E16		ITC	COL	GRP	REMARKS
30	7957-405-003-00	PIN/HAIR	*	1					
31	8843-624-004-00	JOINT,BLOWER	*	1					
32	2232-665-005-10	JOINT/BLOWER	*	1					
33	2232-666-001-20	DUCTHOSE/REAR/6	*	1 -60					
33A	2232-666-001-30	DUCTHOSE/REAR/6	*	1 61-		1			
34	2232-645-021-00	BOLT/SP/M6X20/G	*	2					
35	V301-700-006-00	NUT,SUS/M6	*	2					
36	2232-666-003-00	JOINT/BLOWER/LOWER/6	*	1 -60					
36A	2232-665-600-00	COVER/DUCT/LOWE COMP	*	1 61-					
37	2186-528-244-00	RIVET	*	4 -60					
37A	2232-665-008-00	COVER/DUCT	*	1 61-					
38	2204-738-059-00	BOLT/M6X16	*	2 61-					
39	2204-803-068-00	NUT/WASER/M6/SUS	*	2 61-					
40	2232-666-005-00	RUBBERBAND	*	1 61-					

FIG.135 SEND OUT(FERTILIZER)SYSTEM(F TYPE)(1/3)

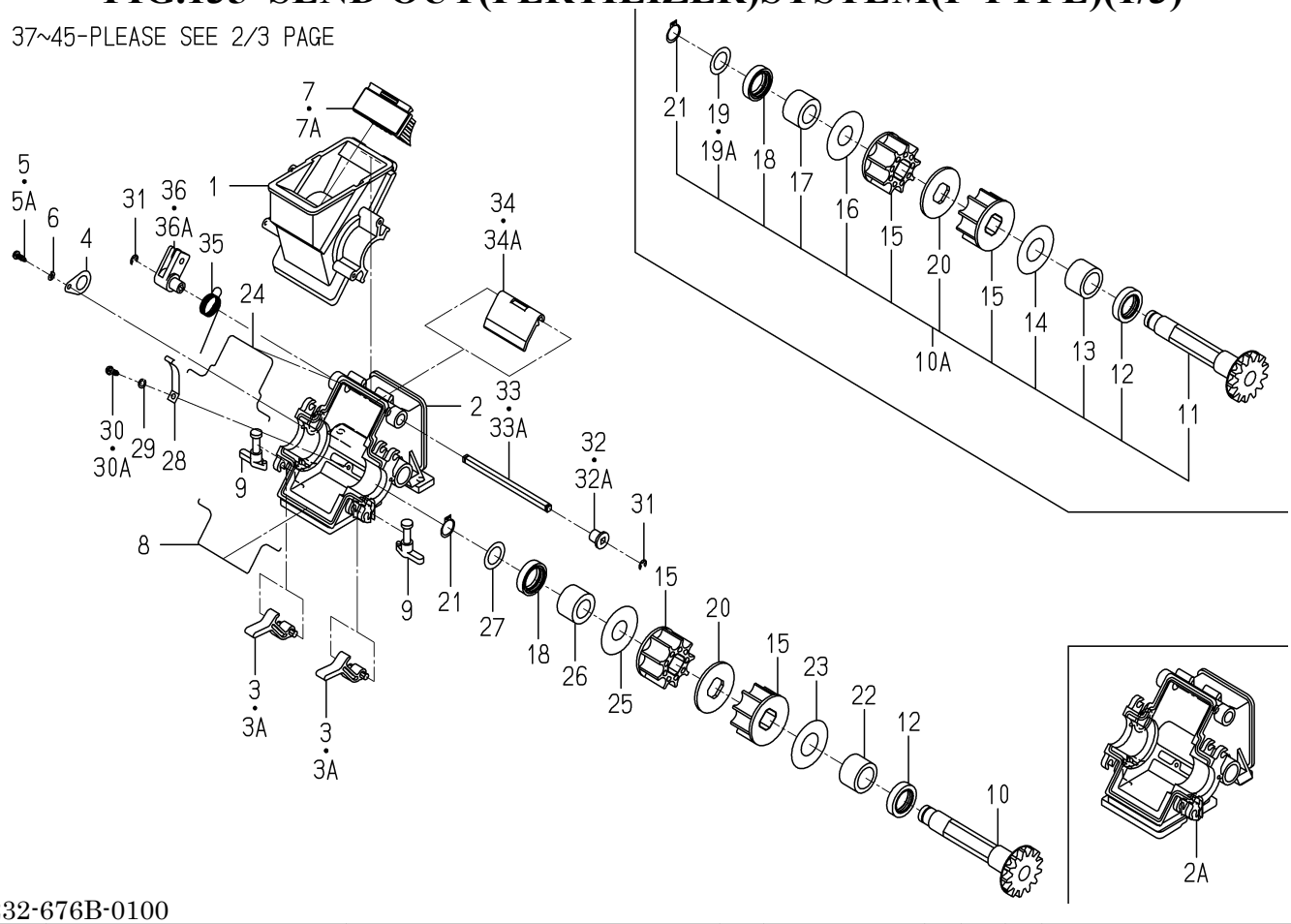

2232-676B-0100

KEY	PART CODE	DESCRIPTION	SPC	TYPE OF MODEL NP60E16		ITC	COL	GRP	REMARKS
1	2232-675-201-00	CAPSULE/UPPER/PZN	*	2					
2	2232-675-202-00	CAPSULE/LOWER/PZN	*	2 -1142					
2A	2232-675-202-10	CAPSULE/LOWER/NP	*	2 1143-		1			
3	8842-705-223-00	HOOK,COUPSULE	*	4 -1142					
3A	2232-675-259-00	HOOK/CAPSULE	*	4 1143-					
4	2232-675-213-00	PALTE/GEAR	*	2					
5	V111-704-001-00	SCREW/M4X10	*	2 -1142					
5A	2232-675-251-00	SCREW/TAPPING	*	2 1143-					
6	V401-700-004-00	WASHER,SP/M4	*	2					
7	2232-675-220-00	BURUSH COMP	*	2 -1142					
7A	2232-675-240-00	BURUSH COMP	*	2 1143-					
8	2232-675-205-00	PACKING/CAPSULE/LOWE	*	2					
9	2232-675-212-10	HOOK/FUNNEL	*	4					
10	8842-705-214-10	GEAR,SPUR/13	*	2 -1142					
10A	2232-675-270-00	ROLL/FERTILIZE ASSY	*	2					
11	2232-675-254-00	GEAR/SPUR/13	*	2 1143-					
12	V744-120-300-70	SEAL,OIL/TC20307	*	2					
13	2232-675-255-00	BUSH/GEAR	*	2 1143-					
14	2232-675-256-00	WASHER/21X45X01	*	2 1143-					
15	2232-675-217-00	ROLL	*	4					
16	2232-675-261-00	WASHER/18X45X1	*	2 1143-					
17	2232-675-257-00	BUSH/17X28X19	*	2 1143-					
18	V744-115-300-70	SEAL,OIL/TC15307	*	2					
19	2232-675-258-00	WASHER/16X25X0.4	*	2 -1187					
19A	2232-675-258-10	WASHER/16X25X1.0	*	2 1188-					
20	2232-675-218-00	COLLER/47X3	*	2					
21	2145-770-014-00	RING, SNAP	*	2					
22	8842-705-215-00	BUSH,GEAR	*	2 -1142					
23	8842-705-216-00	WASHER/21X45X01	*	2 -1142					
24	2232-675-204-00	PACKING/CAPSULE/UPPE	*	2					

FIG.135 SEND OUT(FERTILIZER)SYSTEM(F TYPE)(1/3)

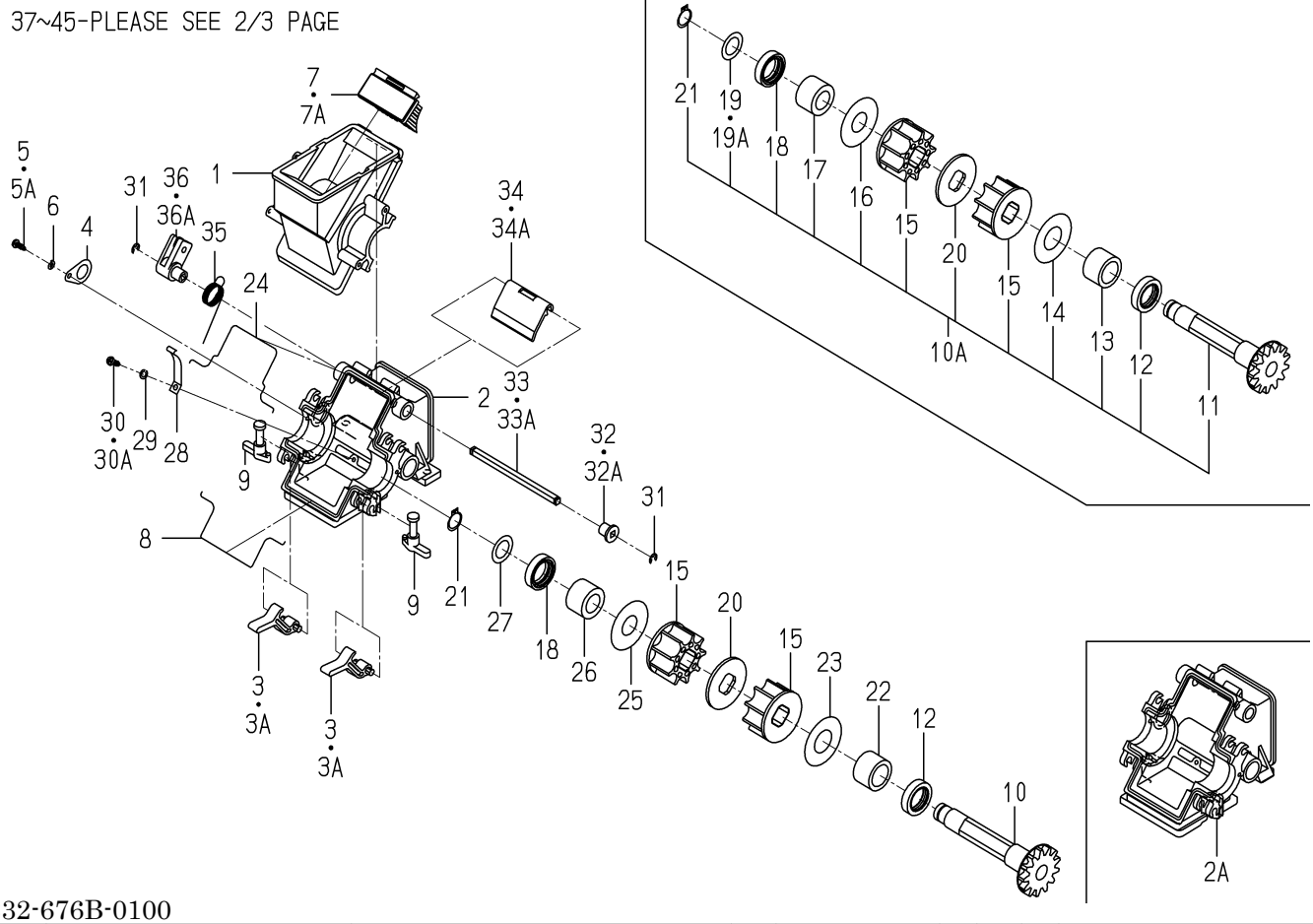

2232-676B-0100

KEY	PART CODE	DESCRIPTION	SPC	TYPE OF MODEL NP60E16		ITC	COL	GRP	REMARKS
25	8842-705-224-00	WASHER/18X45X1	*	2 -1142					
26	8842-705-218-00	BUSH/17X28X19	*	2 -1142					
27	8842-705-219-00	WASHER/16X25X0.4	*	2 -1142					
28	2232-675-207-00	PLATE/CAPSULE	*	2					
29	V401-700-004-00	WASHER,SP/M4	*	2					
30	8842-705-032-00	SCREW/TAPPING/M4X12	*	2 -1142					
30A	2232-675-251-00	SCREW/TAPPING	*	2 1143-					
31	8841-536-011-00	RING, SNAP	*	4					
32	8842-705-208-00	BUSH,EXHAUST LEVER	*	2 -1142					
32A	2232-675-252-00	BUSH/DISCHARGELEVER	*	2 1143-					
33	8842-705-211-10	SHAFT/DISCHARGE	*	2 -1142					
33A	2232-675-253-00	SHAFT/DISCHARGE	*	2 1143-					
34	2232-675-209-00	SHUTTER/DISCHARGE	*	2 -1187					
34A	2232-675-209-10	SHUTTER/DISCHARGE	*	2 1188-		1			
35	2232-675-214-00	SPRING/HT019/LH/Z	*	2					
36	2232-675-211-00	ARM/DISCHARGE	*	2 -1142					
36A	2232-675-211-10	ARM/DISCHARGE	*	2 1143-		1			
37	2232-675-201-00	CAPSULE/UPPER/PZN	*	4					
38	2232-675-202-00	CAPSULE/LOWER/PZN	*	4 -1142					
38A	2232-675-202-10	CAPSULE/LOWER/NP	*	4 1143-		1			
39	8842-705-223-00	HOOK,COUPSULE	*	8 -1142					
39A	2232-675-259-00	HOOK/CAPSULE	*	8 1143-					
40	2232-675-213-00	PALTE/GEAR	*	4					
41	V111-704-001-00	SCREW/M4X10	*	4 -1142					
41A	2232-675-251-00	SCREW/TAPPING	*	4 1143-					
42	V401-700-004-00	WASHER,SP/M4	*	4					
43	2232-675-220-00	BURUSH COMP	*	4 -1142					
43A	2232-675-240-00	BURUSH COMP	*	4 1143-					
44	2232-675-205-00	PACKING/CAPSULE/LOWE	*	4					
45	2232-675-212-10	HOOK/FUNNEL	*	8					

FIG.135 SEND OUT(FERTILIZER)SYSTEM(F TYPE)(2/3)

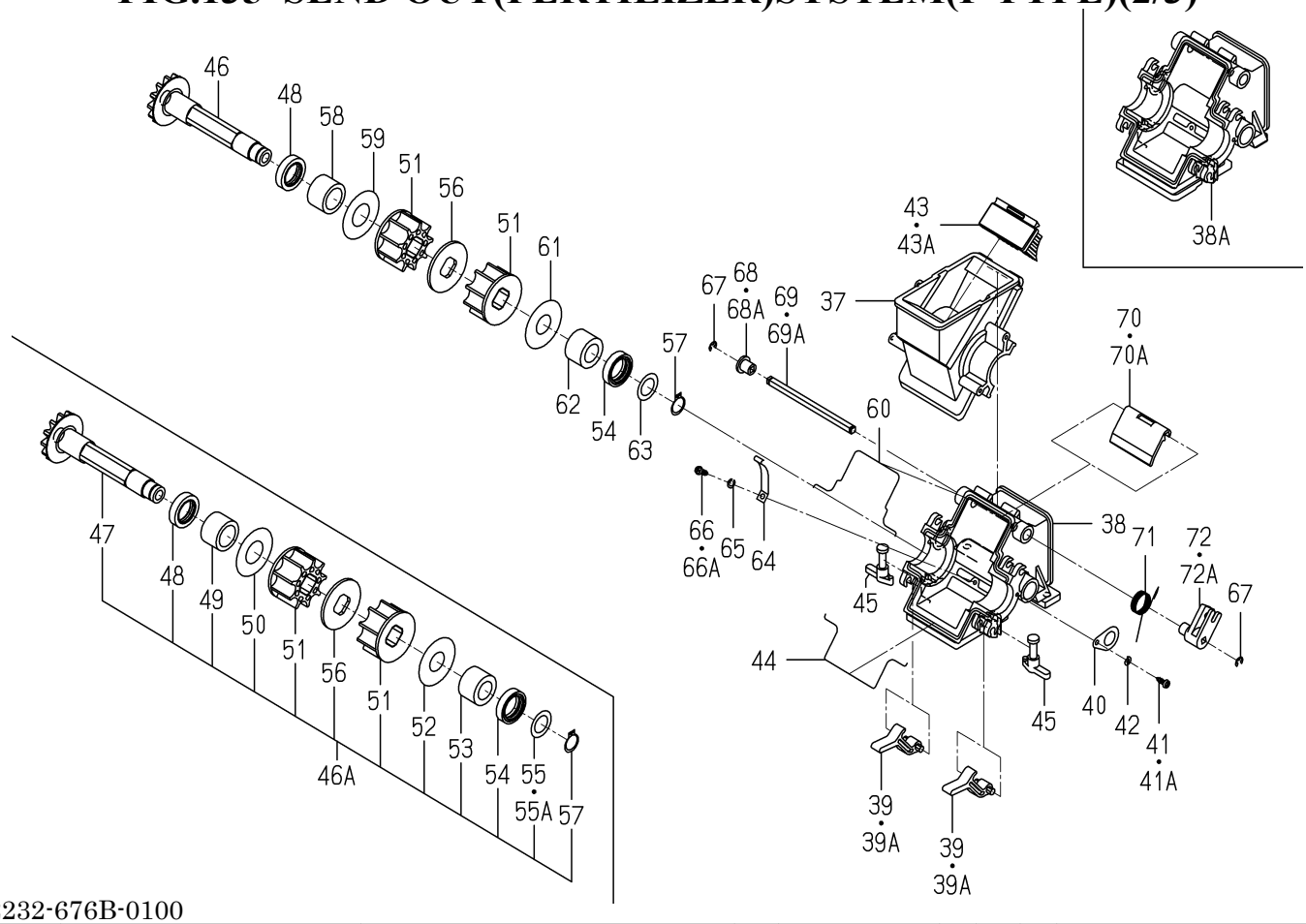

2232-676B-0100

KEY	PART CODE	DESCRIPTION	SPC	TYPE OF MODEL NP60E16		ITC	COL	GRP	REMARKS
46	8842-705-214-10	GEAR,SPUR/13	*	4 -1142					
46A	2232-675-270-00	ROLL/FERTILIZE ASSY	*	4					
47	2232-675-254-00	GEAR/SPUR/13	*	4 1143-					
48	V744-120-300-70	SEAL,OIL/TC20307	*	4					
49	2232-675-255-00	BUSH/GEAR	*	4 1143-					
50	2232-675-256-00	WASHER/21X45X01	*	4 1143-					
51	2232-675-217-00	ROLL	*	8					
52	2232-675-261-00	WASHER/18X45X1	*	4 1143-					
53	2232-675-257-00	BUSH/17X28X19	*	4 1143-					
54	V744-115-300-70	SEAL,OIL/TC15307	*	4					
55	2232-675-258-00	WASHER/16X25X0.4	*	4 -1187					
55A	2232-675-258-10	WASHER/16X25X1.0	*	4 1188-					
56	2232-675-218-00	COLLER/47X3	*	4					
57	2145-770-014-00	RING, SNAP	*	4					
58	8842-705-215-00	BUSH,GEAR	*	4 -1142					
59	8842-705-216-00	WASHER/21X45X01	*	4 -1142					
60	2232-675-204-00	PACKING/CAPSULE/UPPE	*	4					
61	8842-705-224-00	WASHER/18X45X1	*	4 -1142					
62	8842-705-218-00	BUSH/17X28X19	*	4 -1142					
63	8842-705-219-00	WASHER/16X25X0.4	*	4 -1142					
64	2232-675-207-00	PLATE/CAPSULE	*	4					
65	V401-700-004-00	WASHER,SP/M4	*	4					
66	8842-705-032-00	SCREW/TAPPING/M4X12	*	4 -1142					
66A	2232-675-251-00	SCREW/TAPPING	*	4 1143-					
67	8841-536-011-00	RING, SNAP	*	8					
68	8842-705-208-00	BUSH,EXHAUST LEVER	*	4 -1142					
68A	2232-675-252-00	BUSH/DISCHARGELEVER	*	4 1143-					
69	8842-705-211-10	SHAFT/DISCHARGE	*	4 -1142					
69A	2232-675-253-00	SHAFT/DISCHARGE	*	4 1143-					
70	2232-675-209-00	SHUTTER/DISCHARGE	*	4 -1187					

FIG.135 SEND OUT(FERTILIZER)SYSTEM(F TYPE)(3/3)

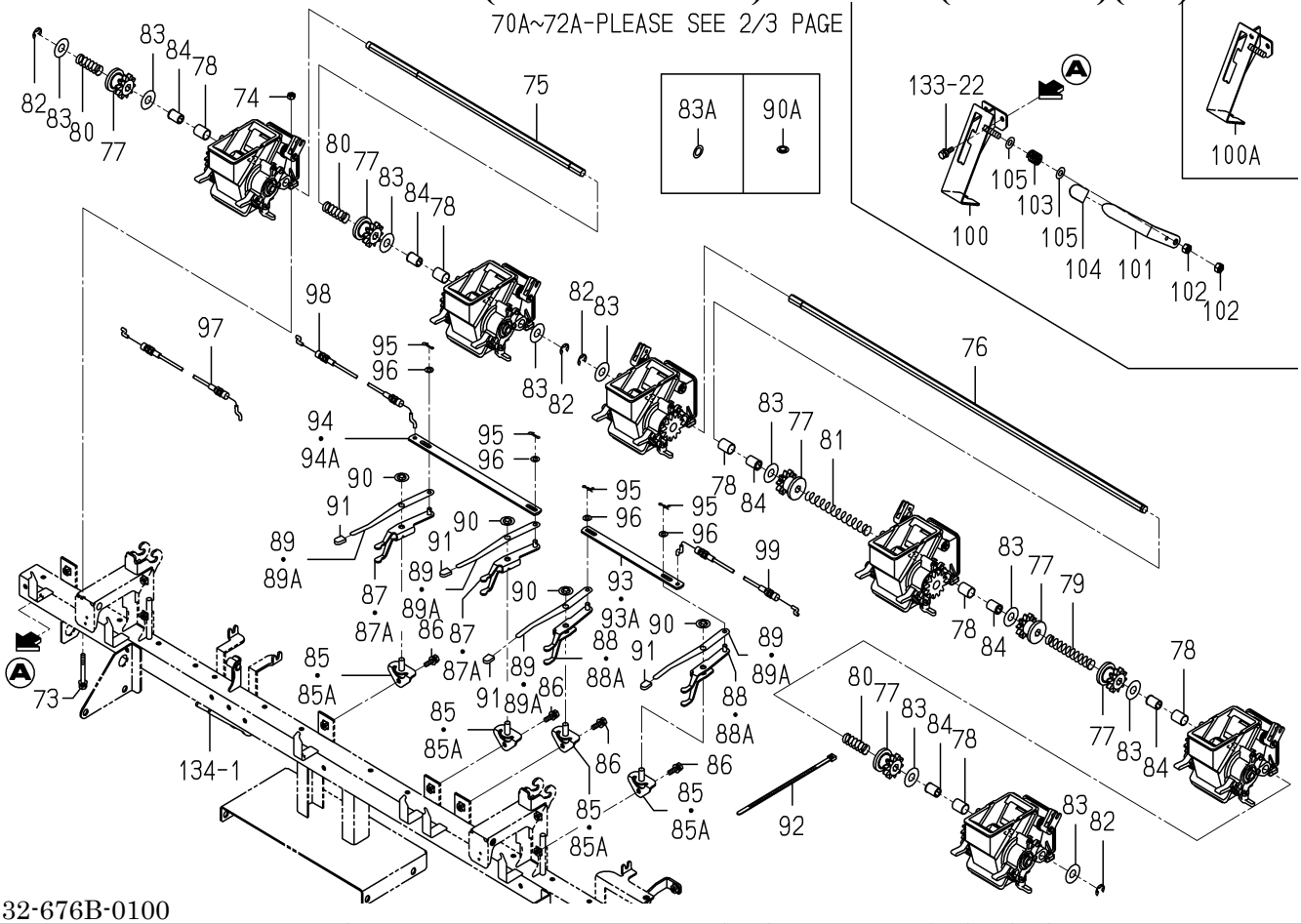

2232-676B-0100

KEY	PART CODE	DESCRIPTION	SPC	TYPE OF MODEL NP60E16		ITC	COL	GRP	REMARKS
70A	2232-675-209-10	SHUTTER/DISCHARGE	*	4 1188-		1			
71	2232-675-215-00	SPRING/HT019/RH/Z	*	4					
72	2232-675-211-00	ARM/DISCHARGE	*	4 -1142					
72A	2232-675-211-10	ARM/DISCHARGE	*	4 1143-		1			
73	2232-645-022-00	BOLT/SPM6X55/G	*	12					
74	V301-700-006-00	NUT,SUS/M6	*	12					
75	2232-676-001-10	SHAFT/FERTILIZE/6RH	*	1					
76	2232-676-003-00	SHAFT/FERTILIZE/6LH	*	1					
77	2232-675-004-00	GEAR/SPUR/10	*	6					
78	3646-102-011-10	BUSH/14X16X20	*	6					
79	2232-675-006-00	SPRING/HC093	*	1					
80	2232-675-008-00	SPRING/HC044	*	3					
81	2232-675-007-00	SPRING/HC128	*	1					
82	8842-515-022-00	RING, SNAP	*	4					
83	8842-705-018-00	WASHER/13X30X01	*	10 -60					
83A	8836-703-055-00	WASHER/M12X20X01	*	10 61-					
84	2186-805-003-00	BUSH,SEEDLING	*	6					
85	2232-675-230-00	CLUTCHFULCRUM	*	6 -60					
85A	2232-675-230-10	CLUTCHFULCRUM	*	6 61-		1			
86	2232-645-021-00	BOLT/SP/M6X20/G	*	6					
87	2232-676-300-10	FORK/CULTCH/LH/ COMP	*	2 -60					
87A	2232-676-300-20	FORK/CULTCH/LH/ COMP	*	2 61-		1			
88	2232-676-310-10	FORK/CULTCH/RH/ COMP	*	4 -60					
88A	2232-676-310-20	FORK/CULTCH/RH/ COMP	*	4 61-		1			
89	2232-676-031-10	LEVER/FERTILIZE CLUT	*	6 -1133		1			
89A	2232-676-031-20	LEVER/FERTILIZE CLUT	*	6 1134-		1			
90	2183-526-008-00	BUSHPUSHNUT/08	*	6 -60					
90A	2232-676-035-00	PUSHNUT/08/SUS	*	6 61-					
91	2232-676-032-00	CAP/FERTILIZECLUTCH	*	6					
92	1376-402-003-00	BAND,WIRE/140	*	6					

FIG.135 SEND OUT(FERTILIZER)SYSTEM(F TYPE)(3/3)

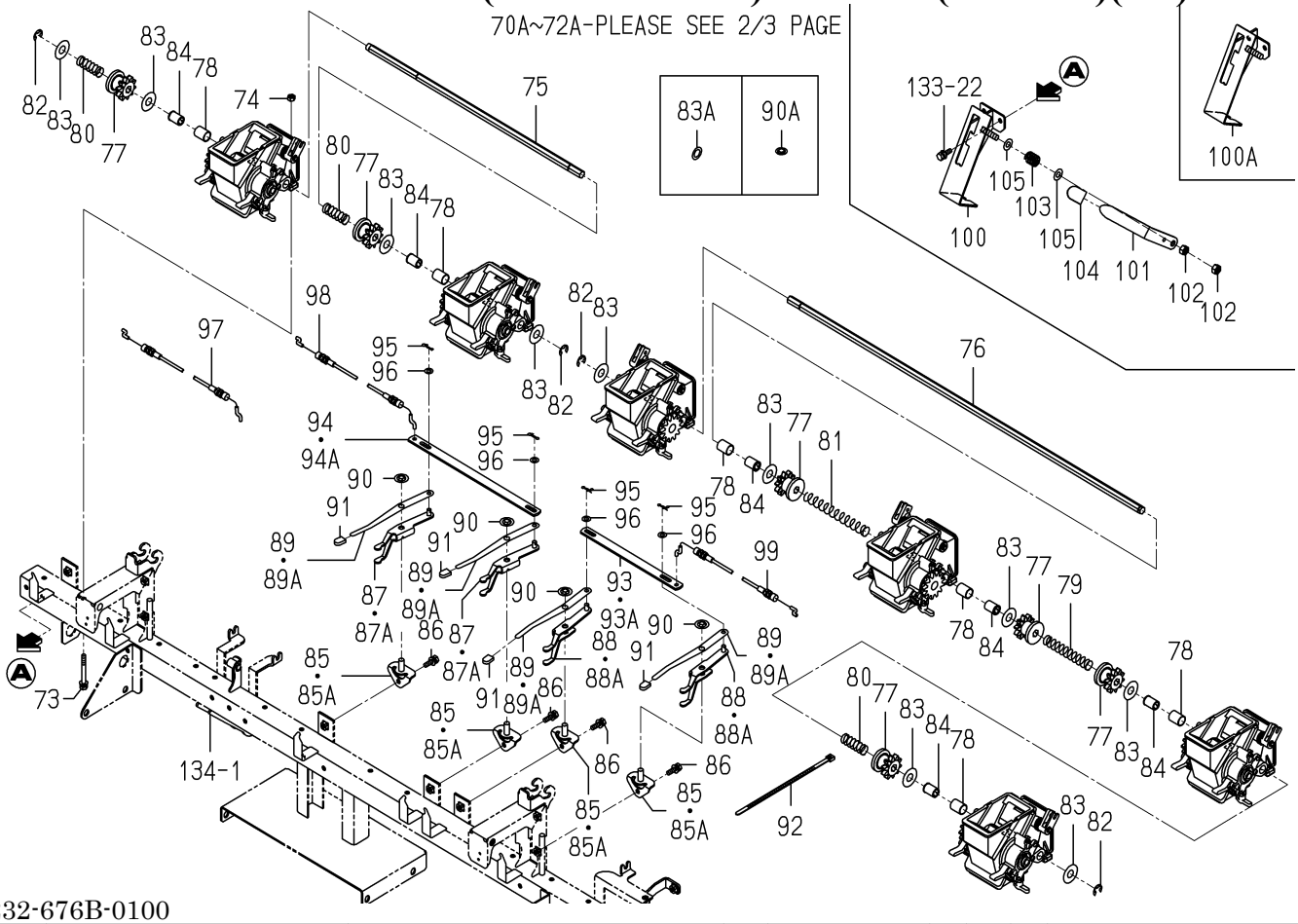

2232-676B-0100

KEY	PART CODE	DESCRIPTION	SPC	TYPE OF MODEL NP60E16		ITC	COL	GRP	REMARKS
93	2232-675-001-00	PLATE/IR/13X211	*	2 -60					
93A	2232-675-001-10	PLATE/IR/16X211	*	2 61-		1			
94	2232-675-002-00	PLATE/IR/16X277	*	1 -60					
94A	2232-675-002-10	PLATE/IR/16X277	*	1 61-		1			
95	2161-735-005-00	PIN	*	6					
96	V411-700-006-00	WASHER,PL/M6	*	6					
97	2232-676-520-00	CABLE/FERTILIZE/R	*	1					
98	2232-676-530-00	CABLE/FERTILIZE/CL	*	1					
99	2232-676-510-00	CABLE/FERTILIZE/L	*	1					
100	2233-678-200-00	BASE/TOTALCLUTC COMP	*	1 -175					
100A	2233-678-200-10	BASE/TOTALCLUTC COMP	*	1 176-		1			
101	2233-678-004-00	LEVER/TOTALCLUTCH	*	1					
102	V304-260-008-00	NUT/M8	*	2					
103	2172-124-004-00	SPRING	*	1					
104	8841-536-018-00	CAP	*	1					
105	V411-700-008-00	WASHER,PL/M8	*	2					

FIG.136 HOPPER(FERTILIZER)SYSTEM(F TYPE)

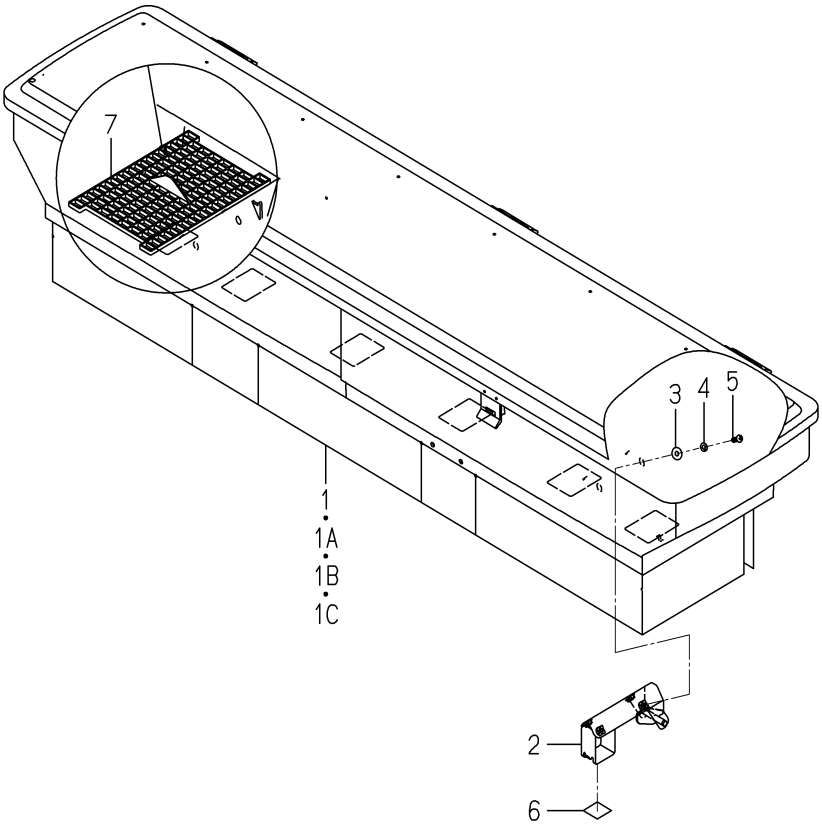

2232-686 -0100

KEY	PART CODE	DESCRIPTION	SPC	TYPE OF MODEL NP60E16		ITC	COL	GRP	REMARKS
1	2232-686-250-40	HOPPER/6Z COMP	*	1 -60					FIG 177
1A	2232-686-250-90	HOPPER/6 COMP	*	1 -578		1			FIG 177
1B	2232-686-270-40	HOPPER/6 COMP	*	1 -632		1			FIG 178
1C	2232-686-270-50	HOPPER/6 COMP	*	1 633-		1			FIG 178
2	2232-686-210-20	STAY/HOPPER COMP	*	2		1			
3	2182-803-008-00	WASHER/07X18X1.5	*	8					
4	V401-700-006-00	WASHER,SP/M6	*	8					
5	V111-706-001-60	SCREW/M6X16	*	8					
6	8842-605-004-10	PLATE,RUBBER/20X25X0	*	2					
7	2232-685-002-00	HOPPERNET	*	6					

FIG.137 PIPING(FERTILIZER)SYSTEM(F TYPE)

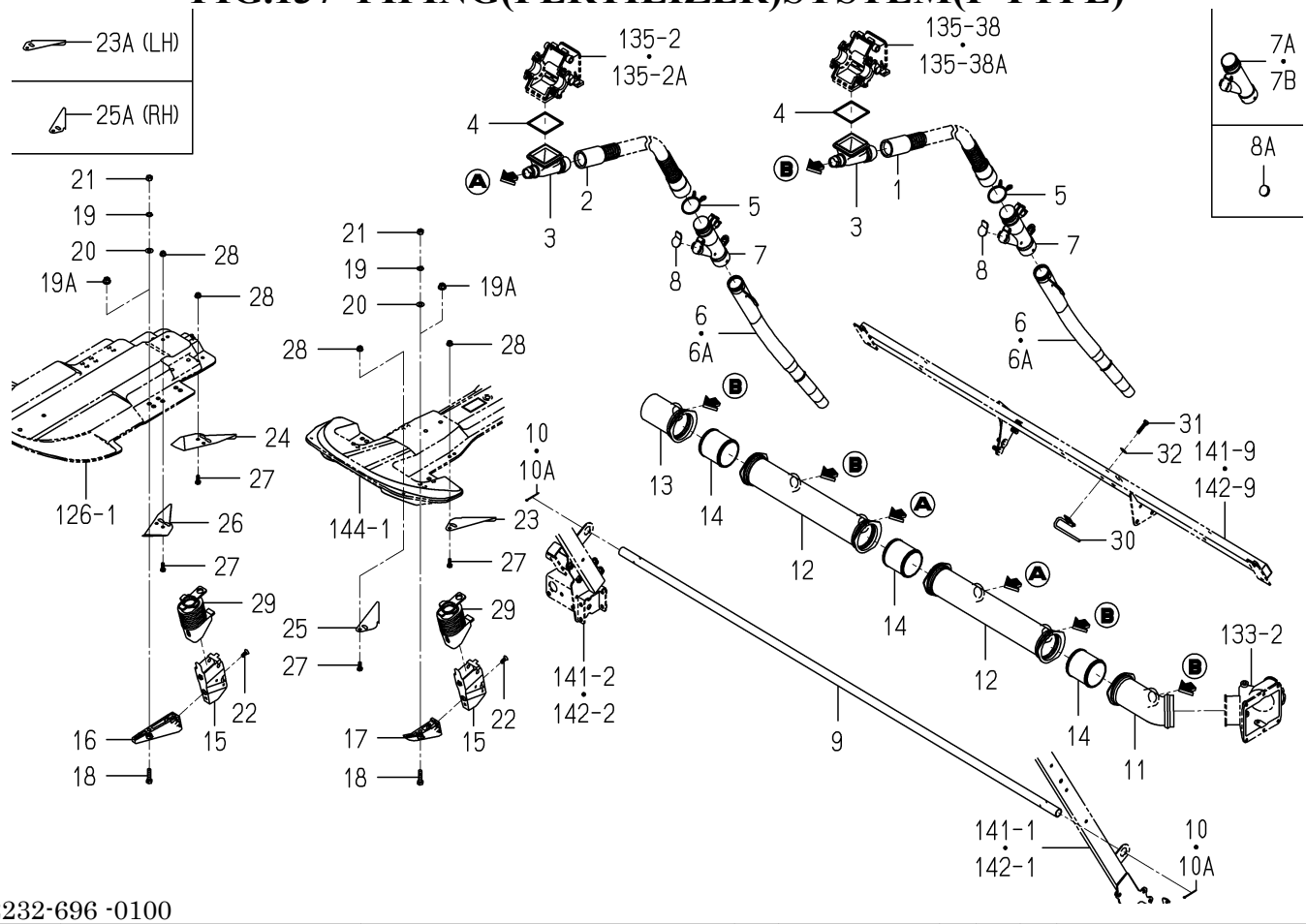

2232-696 -0100

KEY	PART CODE	DESCRIPTION	SPC	TYPE OF MODEL NP60E16		ITC	COL	GRP	REMARKS
1	8844-726-220-00	HOSE/FERTILIZER/6	*	4					
2	2232-696-400-00	HOSE/FERTILIZE/930	*	2					
3	2232-672-007-00	ROHTO	*	6					
4	2232-672-008-10	PACKING/ROHTO	*	6					
5	8836-706-006-10	CLAMP,SPRING/4	*	6					
6	2232-691-057-10	HOSE/FERTILIZER/STRA	*	6 -60					
6A	2232-691-057-20	HOSE/FERTILIZER/STRA	*	6 61-		1			
7	8844-725-310-10	HOSE/FERTILIZER/LOWE	*	6 -153					
7A	2232-691-300-00	HOSE/FERTILIZER/UPPE	*	6 -240					
7B	2232-691-300-10	HOSE/FERTILIZER/UPPE	*	6 241-		1			
8	2232-696-002-00	WEIGHT/FERTILIZER HO	*	6 -60					
8A	8845-724-270-00	HOSE/WEIGHT/PPZ	*	6 61-					
9	2232-692-006-10	TUBE/HOSE/6	*	1					
10	2204-603-009-00	PIN/COTTER/2.5X35/SU	*	2 -60					
10A	V500-162-503-50	PIN,SPLIT/2.5X35	*	2 61-					
11	2232-675-021-00	JOINT/FERTLIZE/LH	*	1					
12	2232-675-022-00	JOINT/FERTLIZE/CENTE	*	2					
13	2232-675-023-00	JOINT/FERTLIZE/RH	*	1					
14	2232-675-024-00	JOINT/66	*	3					
15	2232-696-300-00	DICTHER/NP	*	6					
16	2232-692-004-00	GUIDE/DICTHER/CENTER	*	2					
17	2232-692-005-00	GUIDE/DICTHER/SIDE	*	4					
18	V200-700-803-00	BOLT,SUS/M8X30	*	6					
19	V401-700-008-00	WASHER,SP/M8	*	6 -60					
19A	8844-746-008-00	NUT/WASHER	*	6 61-					
20	V411-700-008-00	WASHER,PL/M8	*	6 -60					
21	V304-700-008-00	NUT,SUS/M8	*	6 -60					
22	8844-745-013-00	SCREW/6	*	6					
23	2232-691-054-00	PLATE/SOIL COVERING/	*	2 -629					
23A	2232-691-054-10	PLATE/SOIL COVERING/	*	2 630-		1			

FIG.137 PIPING(FERTILIZER)SYSTEM(F TYPE)

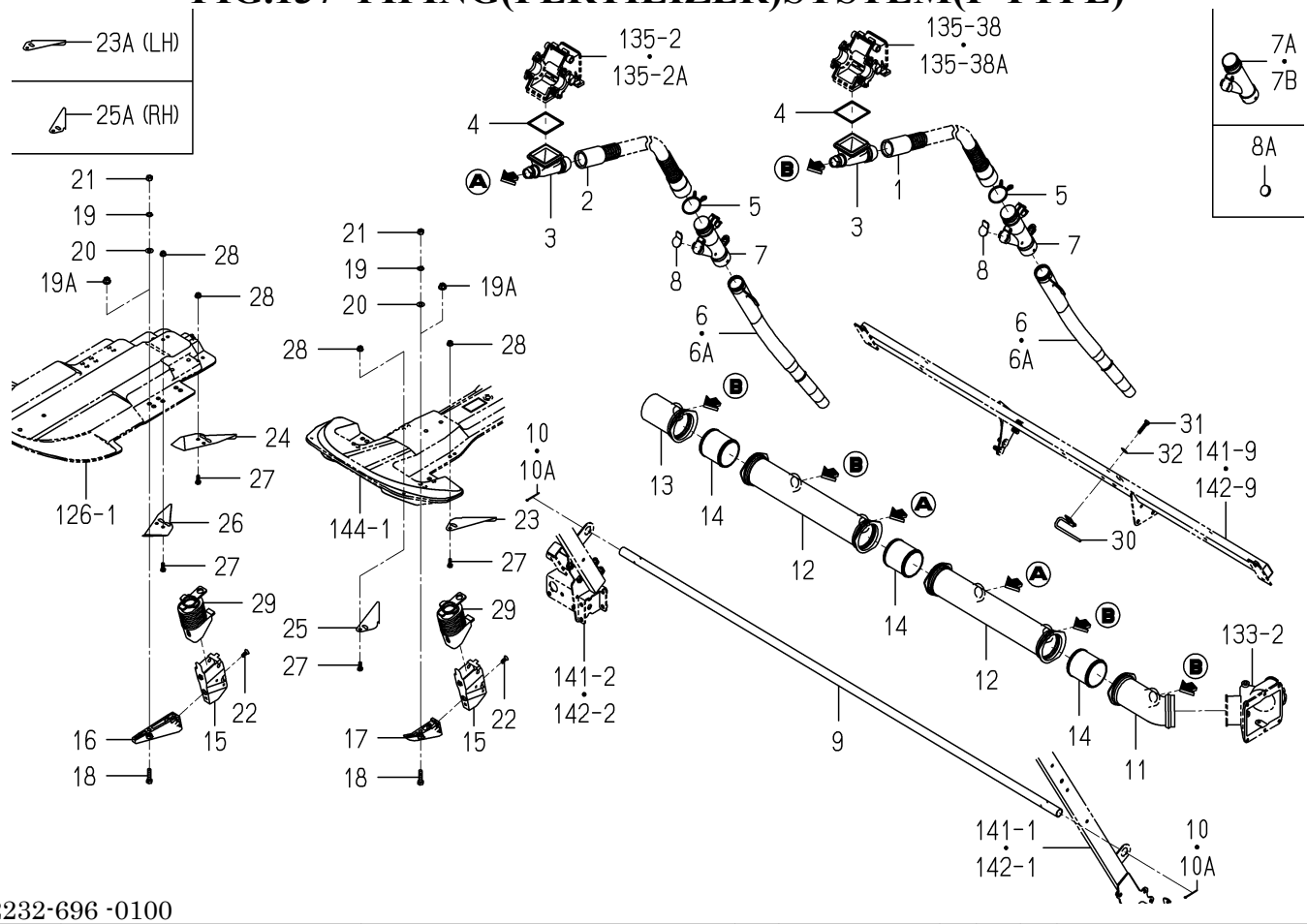

2232-696 -0100

KEY	PART CODE	DESCRIPTION	SPC	TYPE OF MODEL NP60E16		ITC	COL	GRP	REMARKS
24	8836-602-005-10	PLATE/SOIL COVERING/	*	1					
25	2232-691-055-00	PLATE/SOIL COVERING/	*	2 -629					
25A	2232-691-055-10	PLATE/SOIL COVERING/	*	2 630-		1			
26	8836-602-006-10	PLATE/SOIL COVERING/	*	1					
27	V200-700-601-60	BOLT,SUS/M6X16	*	12					
28	2204-803-068-00	NUT/WASER/M6/SUS	*	12					
29	8844-746-007-00	CAP	*	6					
30	2232-705-290-00	GUIDE/HOSE/FERTILIZE	*	1					
31	V210-260-603-00	BOLT,S/M6X30	*	1					
32	3560-503-302-00	WASHER,WIRE TENSION	*	1					

FIG.138 FRAME(SIDE)SYSTEM

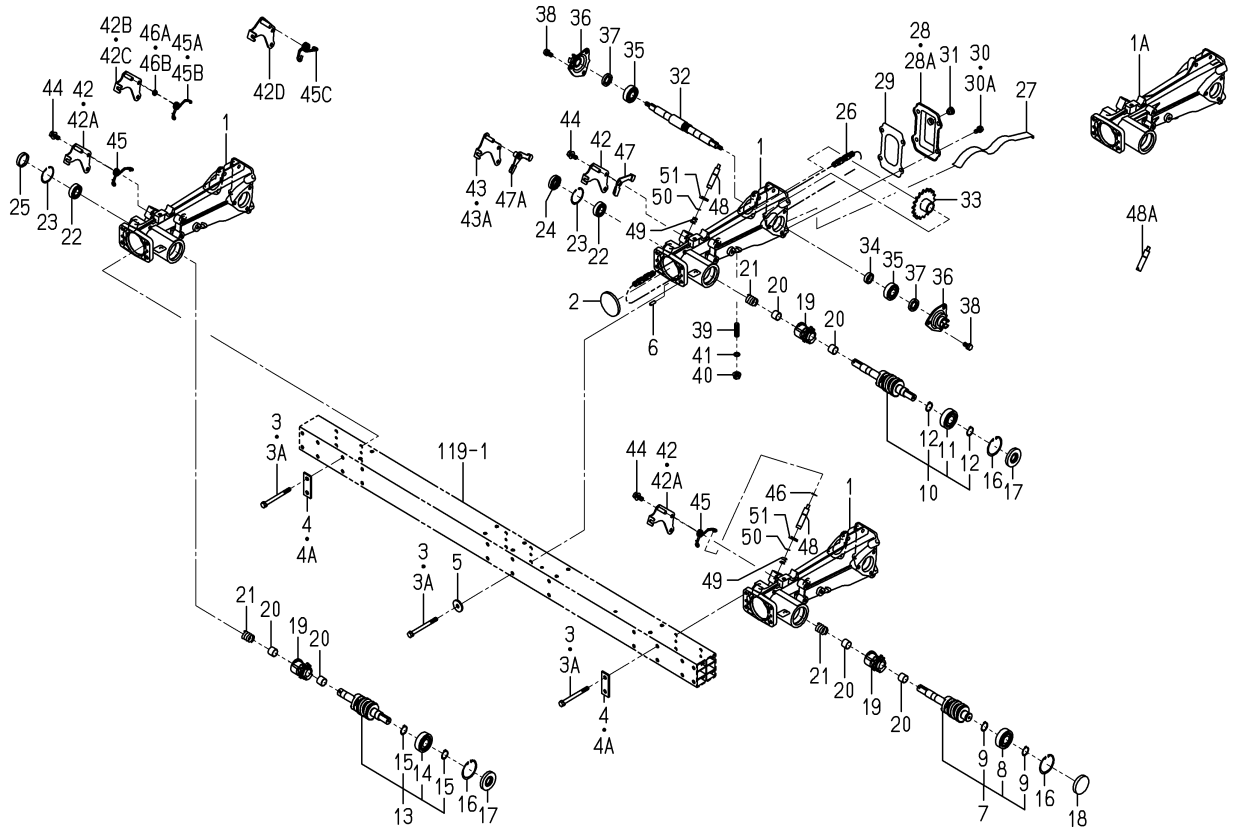

2232-701 -0100

KEY	PART CODE	DESCRIPTION	SPC	TYPE OF MODEL NP60E16		ITC	COL	GRP	REMARKS
1	2232-701-001-10	CASE/SUPPORTFRAME	*	3 -60					
1A	2232-701-001-30	CASE/SUPPORTFRAME	*	3 61-		1			
2	3640-547-007-00	PLUG,CAP/62X6	*	3					
3	2232-603-003-00	BOLT/M8X90	*	10 -60					
3A	2232-603-003-10	BOLT/M8X90	*	10 61-		1			
4	2232-603-002-00	PLATE/I/24X64	*	4 -60					
4A	2232-603-002-10	PLATE/I/24X64	*	4 61-		1			
5	3740-314-017-00	WASHER,TENSION	*	2					
6	V522-100-601-60	PIN,ST,A/6X16	*	6					
7	2232-701-310-00	SAFETY CLUTCH/NP/LH	*	1					
8	V600-110-620-40	BEARING,RB/6204	*	1					
9	V704-140-020-00	RING,SNAP/20 C	*	2					
10	2232-701-330-00	SAFETY CLUTCH/NP/CEN	*	1					
11	V600-110-620-40	BEARING,RB/6204	*	1					
12	V704-140-020-00	RING,SNAP/20 C	*	2					
13	2232-701-350-00	SAFETY CLUTCH/NP/RH	*	1					
14	V600-110-620-40	BEARING,RB/6204	*	1					
15	V704-140-020-00	RING,SNAP/20 C	*	2					
16	V705-140-047-00	RING,SNAP/47 C	*	3					
17	V744-120-470-70	SEAL,OIL/TC20477	*	2					
18	2194-701-010-00	PLUG/47	*	1					
19	2232-701-002-00	SPROCKET/CLUTCH	*	3					
20	2213-701-023-00	BUSH/17X19X15	*	6					
21	2194-701-020-00	SPRING	*	3					
22	V600-110-600-30	BEARING,RB/6003	*	3					
23	V705-140-035-00	RING,SNAP/35 C	*	3					
24	V744-117-350-70	SEAL,OIL/TC17357	*	2					
25	3737-211-007-00	CAP/35	*	1					
26	2232-701-017-00	CHAIN/ROLLER/60	*	3					
27	2232-701-006-10	TIGHTNER/SUPPORT FRA	*	3					

FIG.138 FRAME(SIDE)SYSTEM

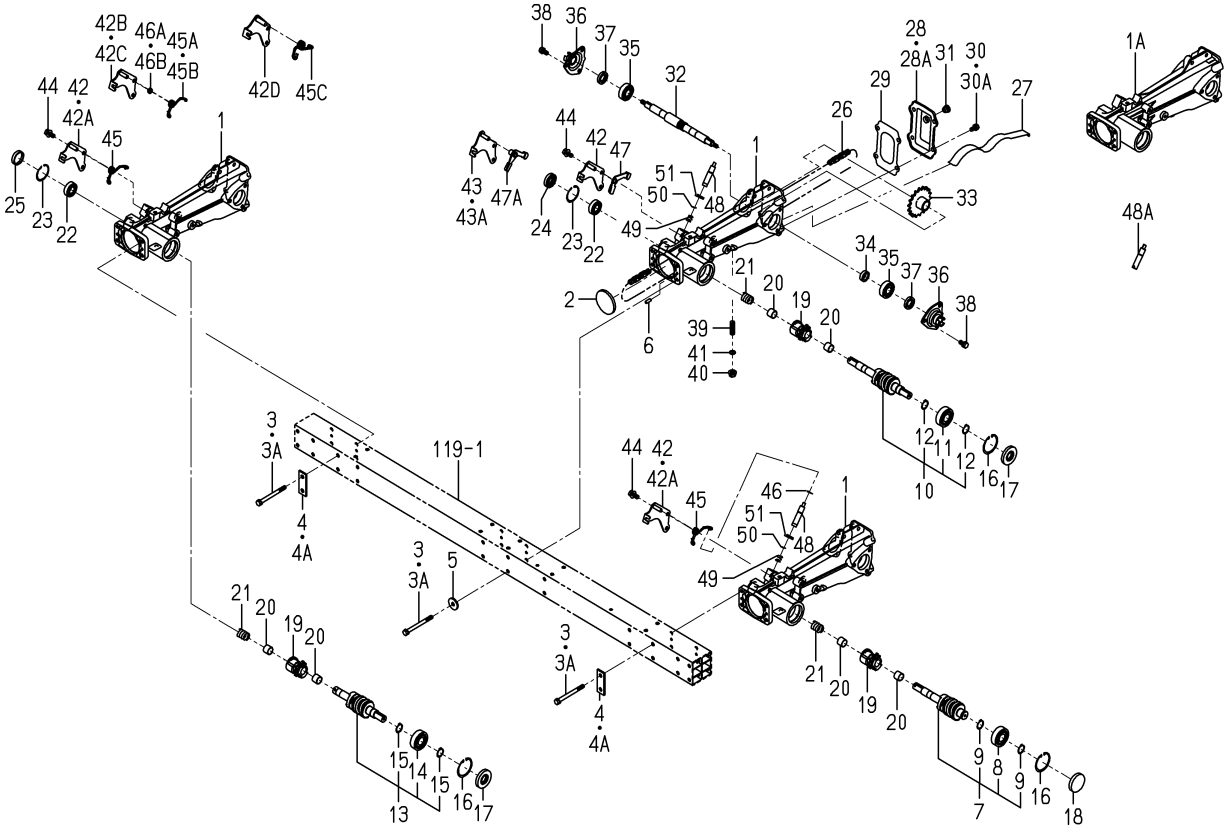

2232-701 -0100

KEY	PART CODE	DESCRIPTION	SPC	TYPE OF MODEL NP60E16		ITC	COL	GRP	REMARKS
28	2161-701-005-00	COVER	*	3 -60					
28A	2161-701-005-10	COVER/FRAME	*	3 61-		1			
29	2161-701-006-10	GASKET	*	3					
30	V211-260-801-60	BOLT,S/M8X16	*	12 -60					
30A	2232-701-068-00	BOLT/S/M8X16/G	*	12 61-					
31	2142-736-236-00	PLUG	*	3					
32	2232-701-004-00	SHAFT/PLANTINGARM	*	3					
33	2232-701-022-30	SPROCKET/18	*	3					
34	2232-701-003-00	COLLAR/17X25X08	*	3					
35	V600-110-620-30	BEARING,RB/6203	*	6					
36	2186-703-220-02	METAL/S COMP	*	6			5N		
37	V740-117-300-60	SEAL,OIL/SC17306	*	6					
38	V211-260-801-60	BOLT,S/M8X16	*	18					
39	2213-701-003-10	BOLT/TENSIONER/M10X3	*	3					
40	2213-701-001-10	NUT/FLANGE/M10	*	3					
41	V720-101-901-00	O-RING/1A,P10	*	3					
42	2232-701-220-20	STAY/AZECLUTCH COMP	*	3 -60					
42A	2232-701-220-20	STAY/AZECLUTCH COMP	*	2 -630					
42B	2232-701-220-30	STAY/AZECLUTCH COMP	*	2 -1133		1			
42C	2232-701-220-30	STAY/AZECLUTCH COMP	*	3 -1187					
42D	2232-701-220-40	STAY/AZECLUTCH COMP	*	3 1188-		3			
43	2232-701-260-30	STAY/AZECLUTCH COMP	*	1 -630					
43A	2232-701-260-40	STAY/AZECLUTCH COMP	*	1 -1133		1			
44	V211-360-802-00	BOLT,SP/M8X20	*	3					
45	2232-701-024-00	SPRING/HT013	*	2 -630					
45A	2232-701-024-10	SPRING/HT013	*	2 -1133		1			
45B	2232-701-024-10	SPRING/HT013	*	3 -1187					
45C	2232-701-024-20	SPRING/HT016	*	3 1188-		3			
46	3560-503-302-00	WASHER,WIRE TENSION	*	2 -60					
46A	2232-701-067-00	COLLAR/08X12X05)	*	2 -1133					

FIG.138 FRAME(SIDE)SYSTEM

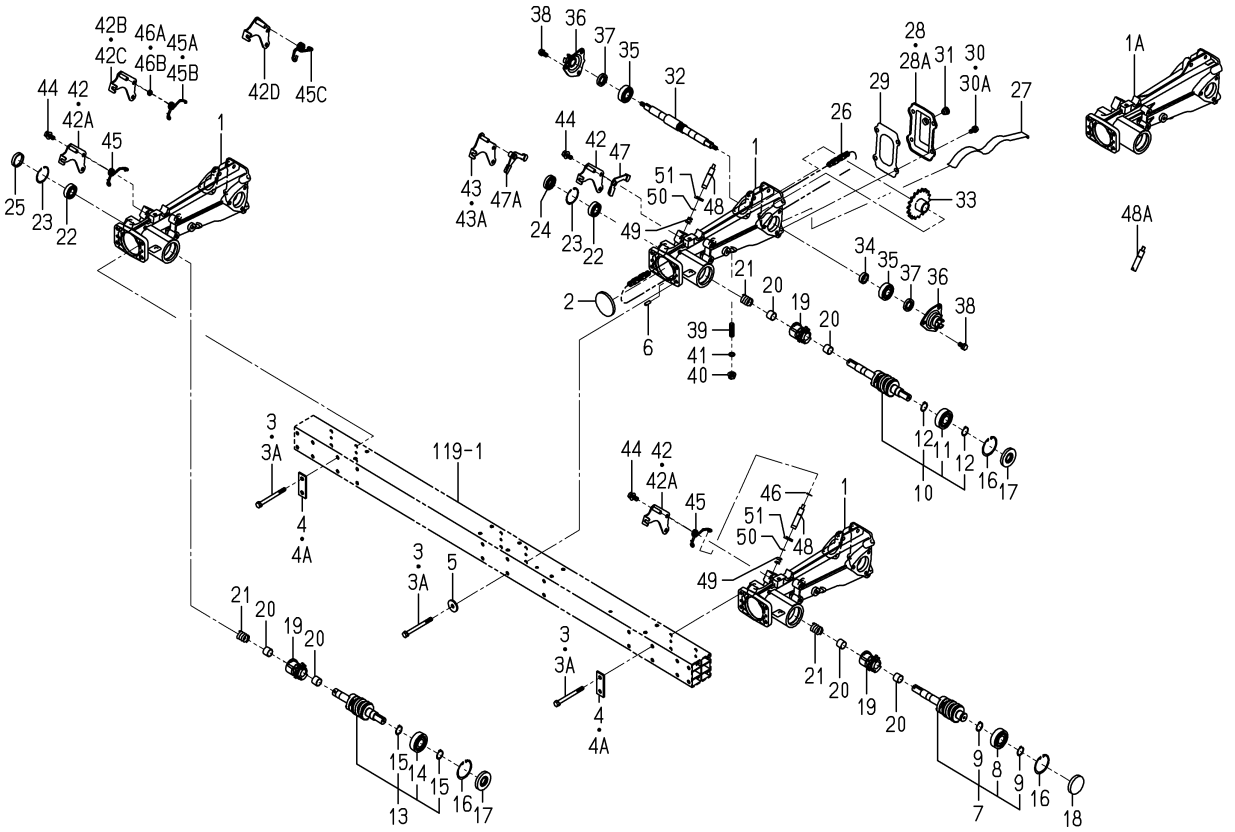

2232-701 -0100

KEY	PART CODE	DESCRIPTION	SPC	TYPE OF MODEL NP60E16		ITC	COL	GRP	REMARKS
46B	2232-701-067-00	COLLAR/08X12X05)	*	3 -1187					
47	2232-701-270-00	ARM/CLUTCH/AZE COMP	*	1 -60					
47A	2232-701-270-10	ARM/CLUTCH/AZE COMP	*	1 -1133		1			
48	2232-701-012-00	PIN/AZECLUTCH	*	3 -60					
48A	2232-701-012-20	PIN/AZECLUTCH	*	3 61-		1			
49	2232-701-013-10	SPRING/HC015	*	3		1			
50	V704-140-012-00	RING,SNAP/12 C	*	3					
51	2145-751-003-00	SEAL,OIL	*	3					

FIG.139 DRIVE(PLANTING)SYSTEM

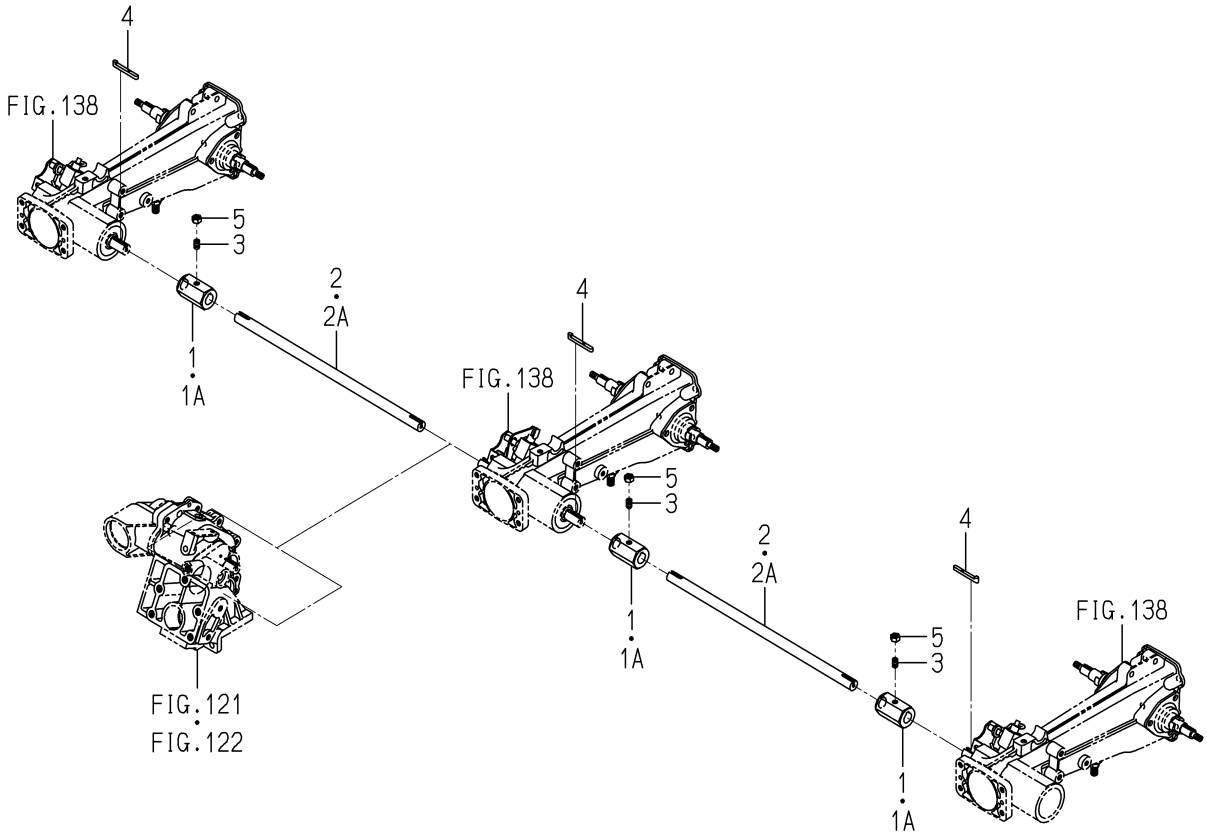

2232-702 -0100

KEY	PART CODE	DESCRIPTION	SPC	TYPE OF MODEL NP60E16		ITC	COL	GRP	REMARKS
1	2232-702-001-00	COUPLING/DRAIVE	*	3 -60					
1A	2232-702-001-10	COUPLING/DRAIVE	*	3 61-		1			
2	2232-702-002-00	SHAFT/DRIVE/6	*	2 -60					
2A	2232-702-002-10	SHAFT/DRIVE/6	*	2 61-		1			
3	3922-420-211-00	SCREW/SET	*	3					
4	2232-702-007-00	KEY/05X05X51	*	3					
5	V304-260-008-00	NUT/M8	*	3					

FIG.140 PUMP(OILING/SLIDER)SYSTEM

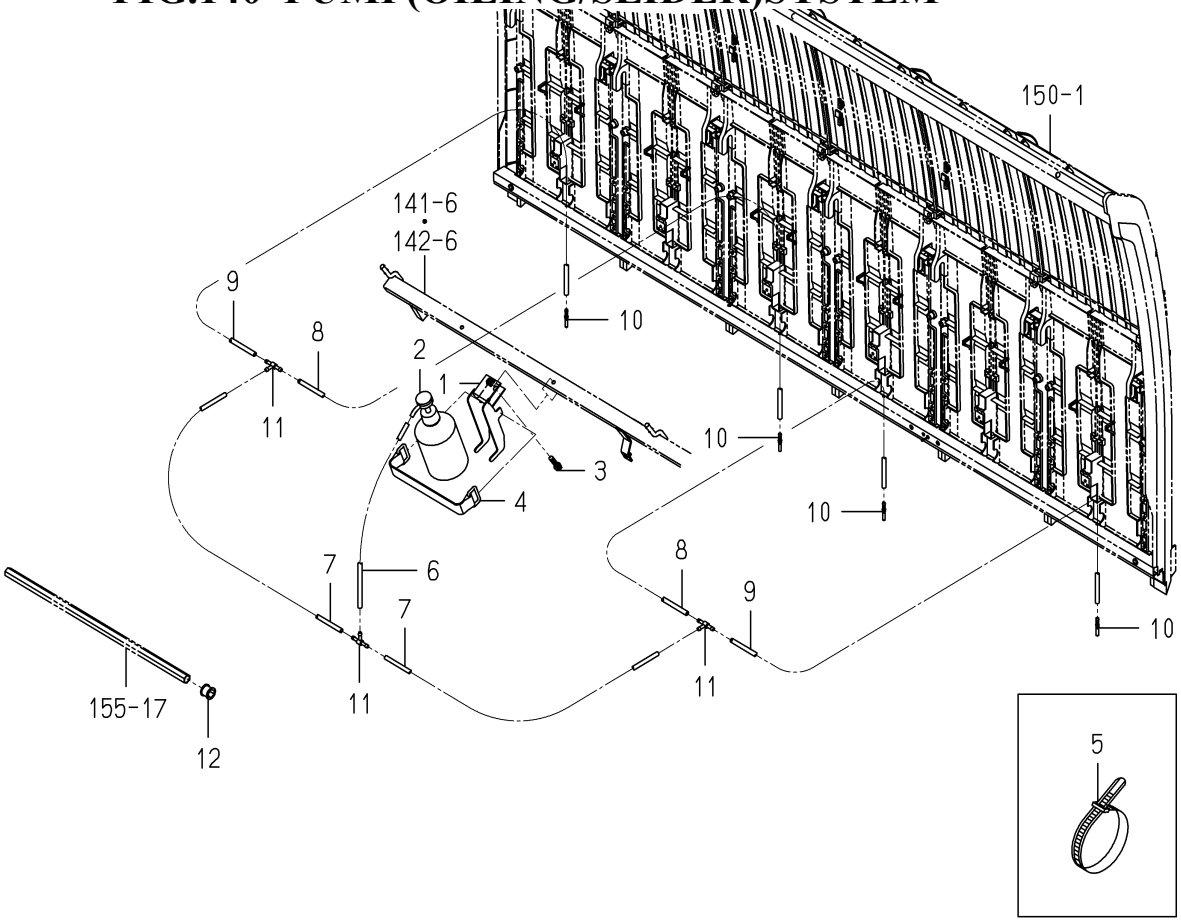

2232-703A-0100

KEY	PART CODE	DESCRIPTION	SPC	TYPE OF MODEL NP60E16		ITC	COL	GRP	REMARKS
1	2232-703-200-00	STAY/TANK COMP	*	1					
2	2213-703-210-10	PUMP/OILSET	*	1					
3	V211-260-803-50	BOLT,S/M8X35	*	1					
4	3640-260-200-30	BATTERYSTAY COMP	*	1					
5	1376-402-003-00	BAND,WIRE/140	*	2					
6	2204-801-017-00	HOSE/08X970	*	1					
7	2204-801-018-00	HOSE/08X850	*	2					
8	2204-801-019-00	HOSE/08X730	*	2					
9	2213-801-008-00	HOSE/08X430	*	2					
10	2213-801-014-00	NOZZLE/OIL	*	4					
11	3632-360-036-00	JOINTT-TYPE 2	*	3					
12	2186-805-011-00	BUSH,SEEDLING	*	4					

FIG.141 FRAME(TANK/SEEDLING)SYSTEM (EXCEPT R TYPE)(NO.1-1187)

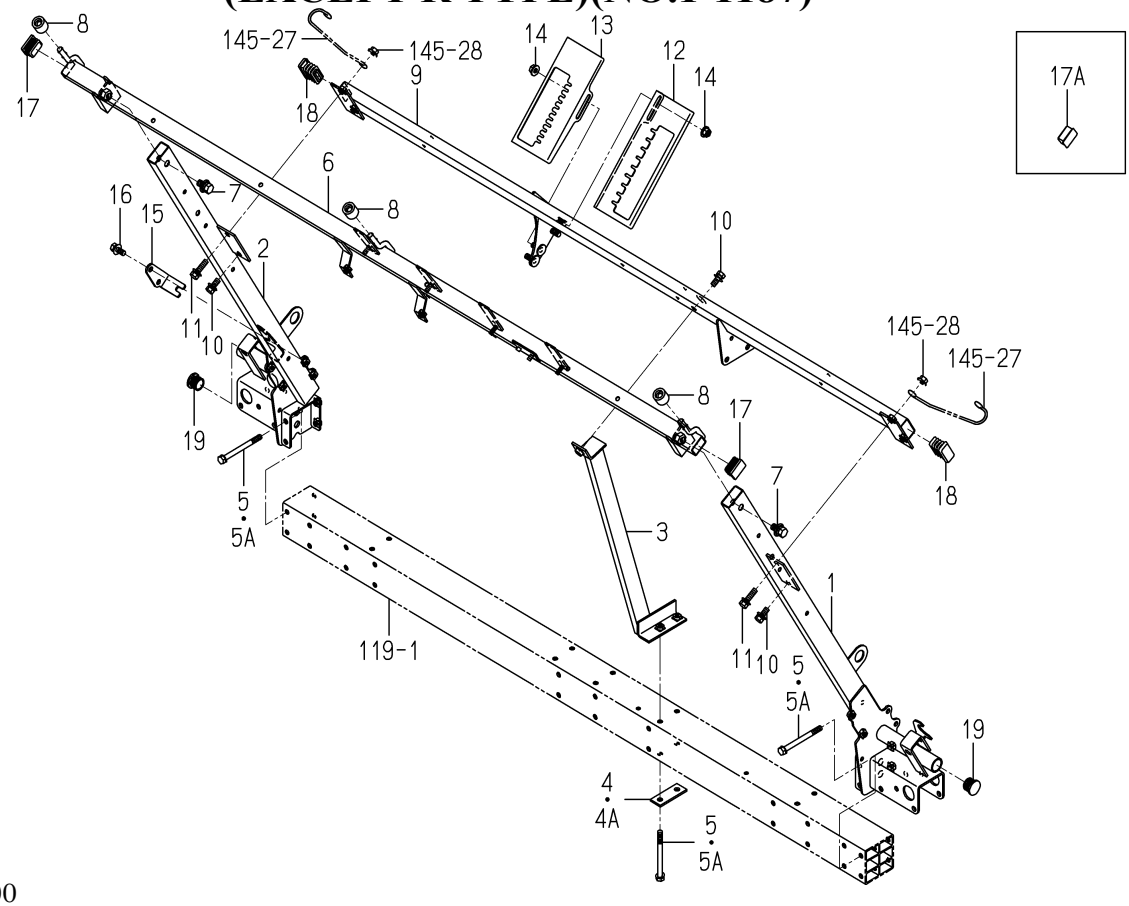

2232-705 -0100

KEY	PART CODE	DESCRIPTION	SPC	TYPE OF MODEL NP60E16		ITC	COL	GRP	REMARKS
1	2232-705-200-30	STAY/SEEDLING TANK/L	*	1 -1187					
2	2232-705-220-30	STAY/SEEDLING TANK/R	*	1 -1187					
3	2232-705-250-00	STAY/SEEDLING TANK/C	*	1 -1187					
4	2232-603-002-00	PLATE/I/24X64	*	1 -60					
4A	2232-603-002-10	PLATE/I/24X64	*	1 -1187		1			
5	2232-603-003-00	BOLT/M8X90	*	6 -60					
5A	2232-603-003-10	BOLT/M8X90	*	6 -1187		1			
6	2232-705-240-20	FRAME/UPPER/6 COMP	*	1 -1187					
7	V211-361-002-00	BOLT,SP/M10X20	*	2 -1187					
8	2130-802-011-10	ROLLER,SEEDLING TANK	*	3 -1187					
9	2232-705-230-10	FRAME/LOWER/6 COMP	*	1 -1187					
10	V211-360-802-00	BOLT,SP/M8X20	*	3 -1187					
11	V211-360-803-00	BOLT,SP/M8X30	*	2 -1187					
12	2232-705-001-10	PLATE/GUIDE/DEPTH	*	1 -1187					
13	2232-705-002-10	PLATE/GUIDE/PICKING	*	1 -1187					
14	V362-260-008-00	NUT/WASHER/M8	*	4 -1187					
15	2232-705-004-00	HOLDER/CABLE/SEND	*	1 -1187					
16	V211-360-802-00	BOLT,SP/M8X20	*	2 -1187					
17	2204-513-026-00	CAP/30X20	*	2 -60					
17A	2232-705-011-00	CAP/FRAME/TANK	*	2 -1187					
18	2204-513-003-00	CAP,SEEDLING FRAME/P	*	2 -1187					
19	2213-516-006-00	CAP/22X15	*	2 -1187					

FIG.142 FRAME(TANK/SEEDLING)SYSTEM (EXCEPT R TYPE-NO.1188-)

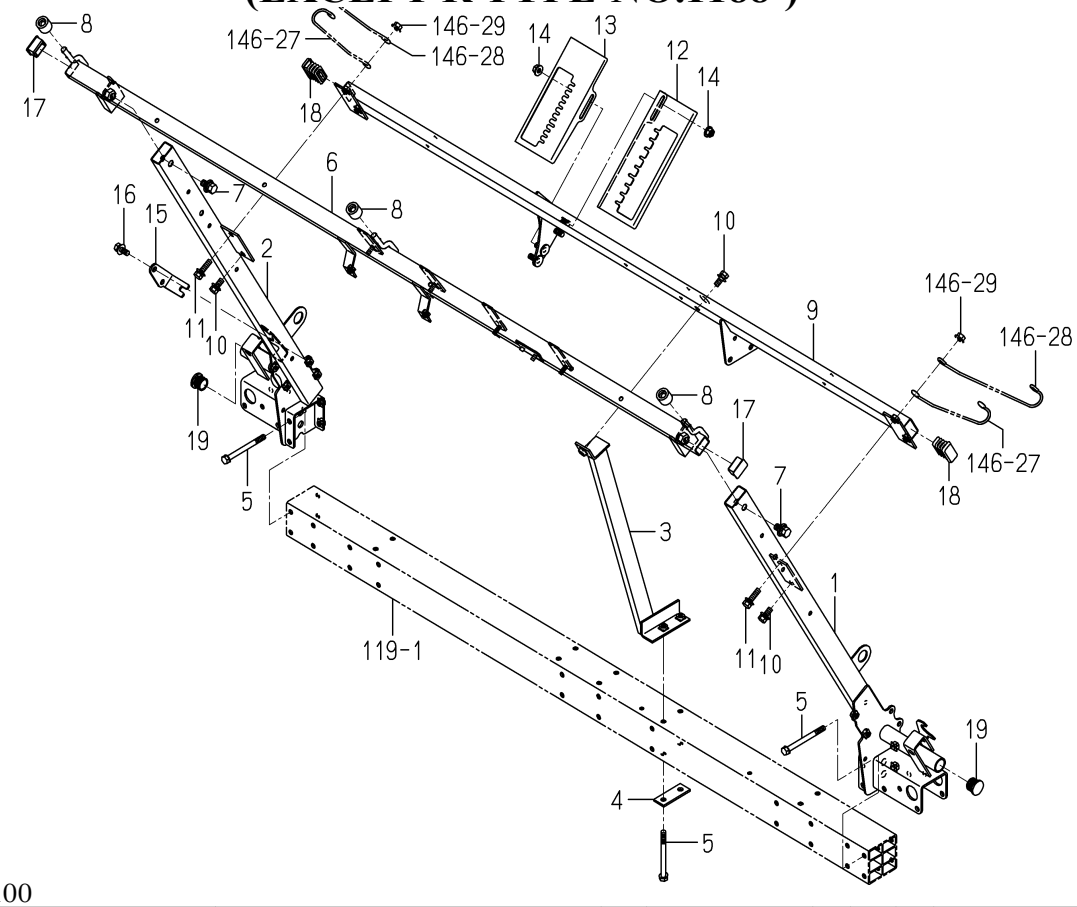

2232-705E-0100

KEY	PART CODE	DESCRIPTION	SPC	TYPE OF MODEL NP60E16		ITC	COL	GRP	REMARKS
1	2232-705-200-30	STAY/SEEDLING TANK/L	*	1 1188-					
2	2232-705-220-30	STAY/SEEDLING TANK/R	*	1 1188-					
3	2232-705-250-00	STAY/SEEDLING TANK/C	*	1 1188-					
4	2232-603-002-10	PLATE/I/24X64	*	1 1188-					
5	2232-603-003-10	BOLT/M8X90	*	6 1188-					
6	2232-705-240-20	FRAME/UPPER/6 COMP	*	1 1188-					
7	V211-361-002-00	BOLT,SP/M10X20	*	2 1188-					
8	2130-802-011-10	ROLLER,SEEDLING TANK	*	3 1188-					
9	2232-705-230-10	FRAME/LOWER/6 COMP	*	1 1188-					
10	V211-360-802-00	BOLT,SP/M8X20	*	3 1188-					
11	V211-360-803-50	BOLT,SP/M8X35	*	2 1188-					
12	2232-705-001-10	PLATE/GUIDE/DEPTH	*	1 1188-					
13	2232-705-002-10	PLATE/GUIDE/PICKING	*	1 1188-					
14	V362-260-008-00	NUT/WASHER/M8	*	4 1188-					
15	2232-705-004-00	HOLDER/CABLE/SEND	*	1 1188-					
16	V211-360-802-00	BOLT,SP/M8X20	*	2 1188-					
17	2232-705-011-00	CAP/FRAME/TANK	*	2 1188-					
18	2204-513-003-00	CAP,SEEDLING FRAME/P	*	2 1188-					
19	2213-516-006-00	CAP/22X15	*	2 1188-					

FIG.143 LEVER(PICKING/SEEDLING)SYSTEM

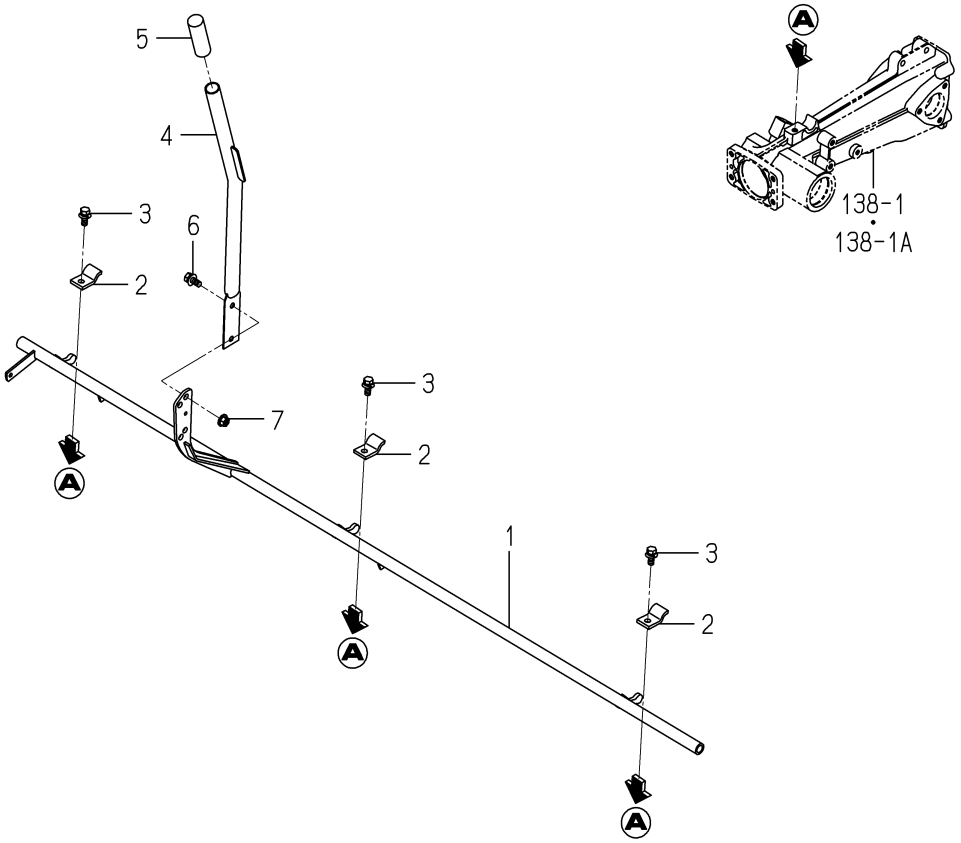

2232-706 -0100

KEY	PART CODE	DESCRIPTION	SPC	TYPE OF MODEL NP60E16		ITC	COL	GRP	REMARKS
1	2232-706-200-00	TUBE/SEEDLING PICKIN	*	1					
2	2204-706-011-10	PLATE/HOLDER/PLANTIN	*	3					
3	V211-360-802-00	BOLT,SP/M8X20	*	3					
4	2232-706-210-00	LEVER/PICKING COMP	*	1					
5	2183-613-003-00	GRIP	*	1					
6	V211-360-802-00	BOLT,SP/M8X20	*	2					
7	V362-260-008-00	NUT/WASHER/M8	*	2					

FIG.144 FLOAT(SIDE)SYSTEM

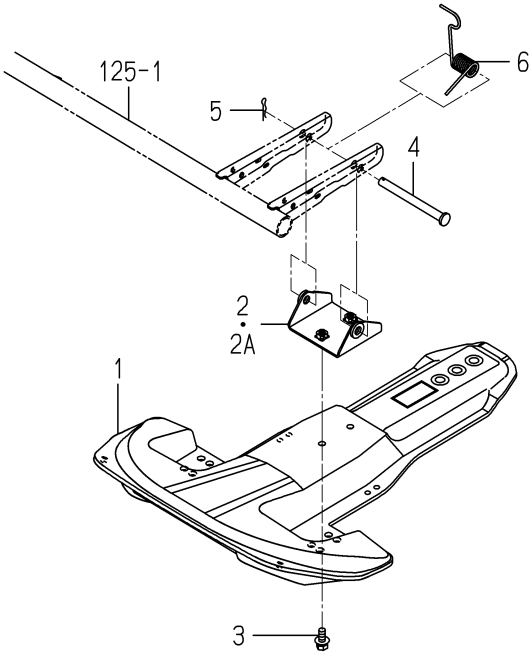

2232-710 -0100

KEY	PART CODE	DESCRIPTION	SPC	TYPE OF MODEL NP60E16		ITC	COL	GRP	REMARKS
1	2232-710-012-00	FLOAT/SIDE/NP	*	2					
2	2232-710-260-00	STAY/FLOAT/SIDE COMP	*	2 -60					
2A	2232-710-260-10	STAY/FLOAT/SIDE COMP	*	2 61-		1			
3	V211-360-802-00	BOLT,SP/M8X20	*	4					
4	3656-223-011-00	PIN/10X113	*	2					
5	3505-704-003-00	PIN,HAIR (10)	*	2					
6	2232-710-017-10	SPRING/HT017/S	*	2					

FIG.145 MARKER SYSTEM(EXCEPT R TYPE)(NO.1-1187)

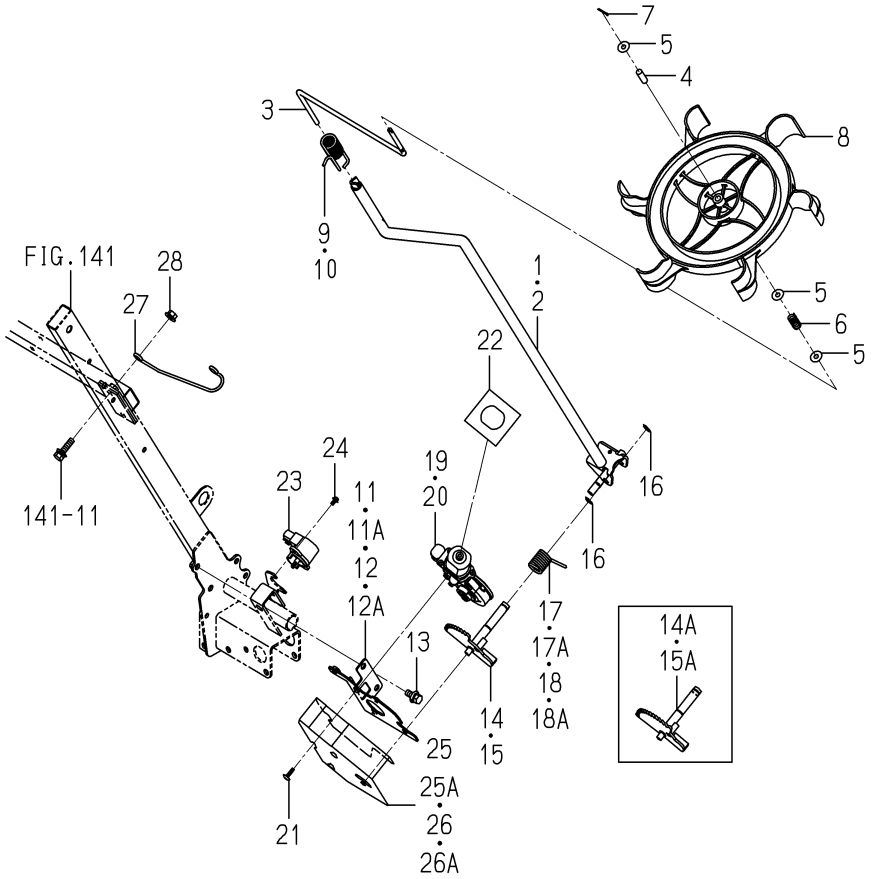

2232-711 -0100

KEY	PART CODE	DESCRIPTION	SPC	TYPE OF MODEL NP60E16		ITC	COL	GRP	REMARKS
1	2232-711-240-20	TUBE/MARKER/6L COMP	*	1 -1187					
2	2232-711-250-20	TUBE/MARKER/6R COMP	*	1 -1187					
3	2232-711-005-00	ROD/MARKER/WATER WHE	*	2 -1187					
4	2183-526-001-10	HUB,MARKER	*	2 -1187					
5	3560-503-302-00	WASHER,WIRE TENSION	*	6 -1187					
6	2186-707-006-00	SPRING/HC029	*	2 -1187					
7	2186-707-001-00	PIN,COTTER/2.5X15/SU	*	2 -1187					
8	2232-711-014-00	LINEMARKER/NP	*	2 -1187					
9	2232-711-007-00	SPRING/MARKER/REAR/L	*	1 -1187					
10	2232-711-008-00	SPRING/MARKER/REAR/R	*	1 -1187					
11	2232-711-200-10	BASE/MARKER/LH COMP	*	1 -630					
11A	2232-711-200-20	BASE/MARKER/LH COMP	*	1 -1187		1			
12	2232-711-210-10	BASE/MARKER/RH COMP	*	1 -630					
12A	2232-711-210-20	BASE/MARKER/RH COMP	*	1 -1187		1			
13	V211-360-802-00	BOLT,SP/M8X20	*	4 -1187					
14	2232-711-220-40	GEAR/MARKER/LH COMP	*	1 -60					
14A	2232-711-220-50	GEAR/MARKER/LH COMP	*	1 -1187		1			
15	2232-711-230-40	GEAR/MARKER/RH COMP	*	1 -60					
15A	2232-711-230-50	GEAR/MARKER/RH COMP	*	1 -1187		1			
16	V704-140-012-00	RING,SNAP/12 C	*	4 -1187					
17	2232-711-003-00	SPRING/HT020/LH	*	1 -60					
17A	2232-711-003-10	SPRING/HT020/LH	*	1 -1187		1			
18	2232-711-004-00	SPRING/HT020/RH	*	1 -60					
18A	2232-711-004-10	SPRING/HT020/RH	*	1 -1187		1			
19	3888-726-200-00	MOTOR/LH ASSY	*	1 -1187					
20	2232-711-270-00	MOTOR/RH ASSY	*	1 -1187					
21	3888-218-001-00	TAPPINGSCREW/M5X16	*	6 -1187					
22	2232-711-011-00	COVER/MOTOR	*	2 -1187					
23	1729-662-340-00	SENSOR/ANGLE/110/R	*	2 -1187					
24	V120-364-001-00	SCREW,SP/M4X10	*	4 -1187					

FIG.145 MARKER SYSTEM(EXCEPT R TYPE)(NO.1-1187)

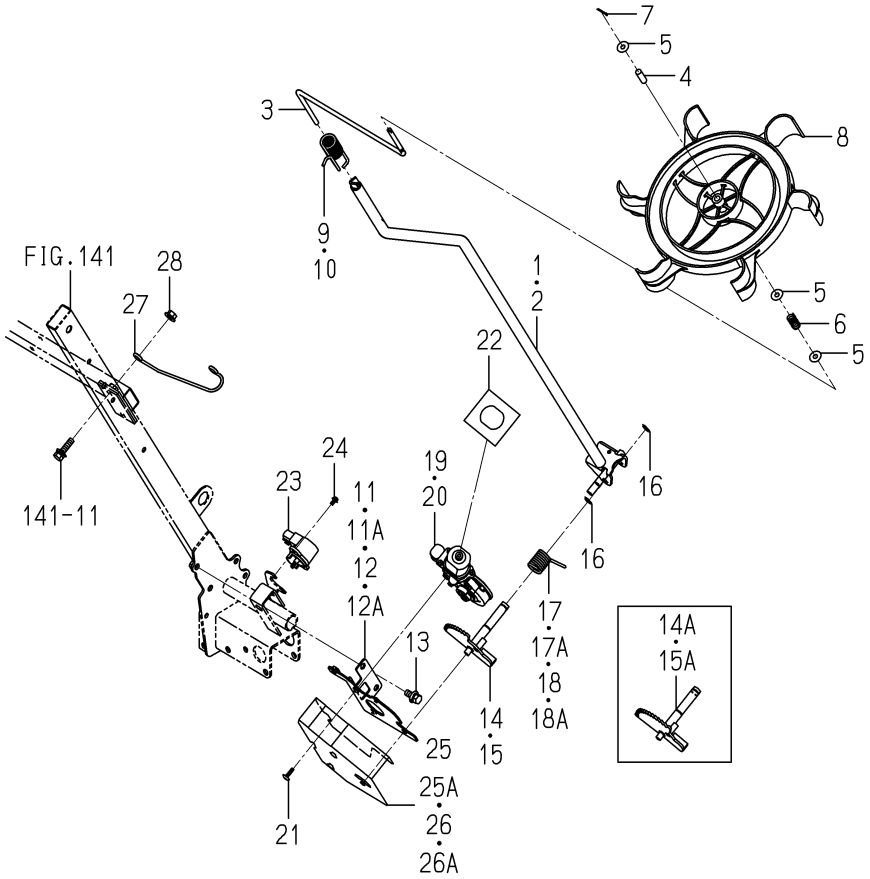

2232-711 -0100

KEY	PART CODE	DESCRIPTION	SPC	TYPE OF MODEL NP60E16		ITC	COL	GRP	REMARKS
25	2232-711-001-00	COVER/MARKER/LH	*	1 -630			5N		
25A	2232-711-001-10	COVER/MARKER/LH	*	1 -1187		1	5N		
26	2232-711-002-00	COVER/MARKER/RH	*	1 -630			5N		
26A	2232-711-002-10	COVER/MARKER/RH	*	1 -1187		1	5N		
27	2232-711-013-00	HOOK/MARKER	*	2 -1187					
28	V362-260-008-00	NUT/WASHER/M8	*	2 -1187					

FIG.146 MARKER SYSTEM(EXCEPT R TYPE-NO.1188-)

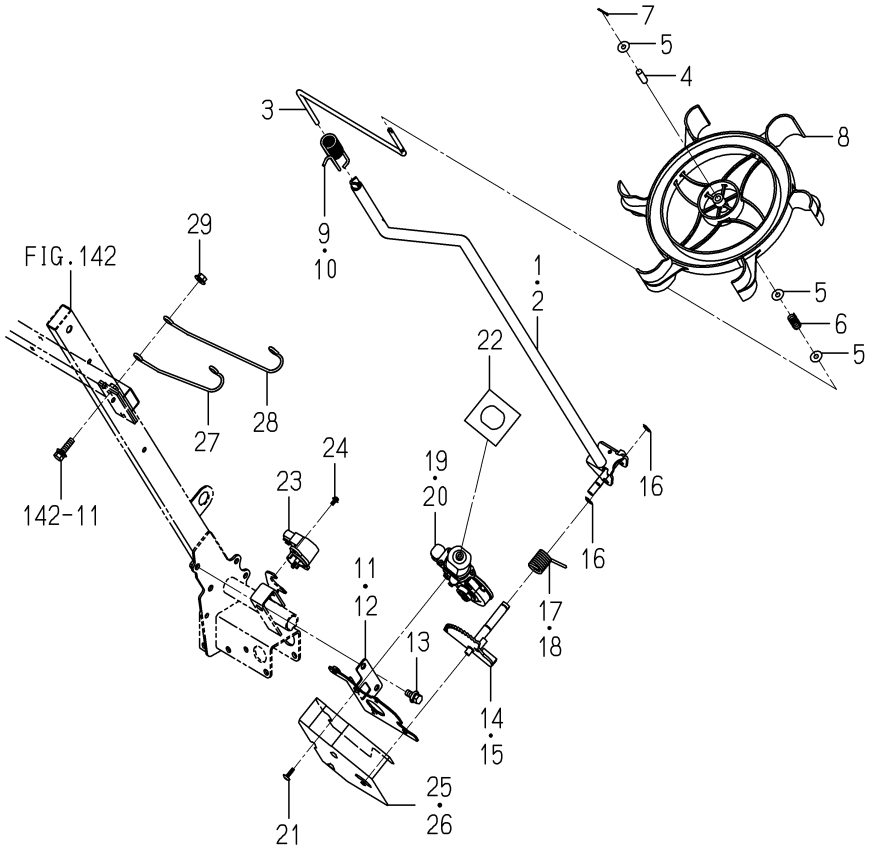

2232-711E-0100

KEY	PART CODE	DESCRIPTION	SPC	TYPE OF MODEL NP60E16		ITC	COL	GRP	REMARKS
1	2232-711-240-20	TUBE/MARKER/6L COMP	*	1 1188-					
2	2232-711-250-20	TUBE/MARKER/6R COMP	*	1 1188-					
3	2232-711-005-00	ROD/MARKER/WATER WHE	*	2 1188-					
4	2183-526-001-10	HUB,MARKER	*	2 1188-					
5	3560-503-302-00	WASHER,WIRE TENSION	*	6 1188-					
6	2186-707-006-00	SPRING/HC029	*	2 1188-					
7	2186-707-001-00	PIN,COTTER/2.5X15/SU	*	2 1188-					
8	2232-711-014-00	LINEMARKER/NP	*	2 1188-					
9	2232-711-007-00	SPRING/MARKER/REAR/L	*	1 1188-					
10	2232-711-008-00	SPRING/MARKER/REAR/R	*	1 1188-					
11	2232-711-200-20	BASE/MARKER/LH COMP	*	1 1188-					
12	2232-711-210-20	BASE/MARKER/RH COMP	*	1 1188-					
13	V211-360-802-00	BOLT,SP/M8X20	*	4 1188-					
14	2232-711-220-50	GEAR/MARKER/LH COMP	*	1 1188-					
15	2232-711-230-50	GEAR/MARKER/RH COMP	*	1 1188-					
16	V704-140-012-00	RING,SNAP/12 C	*	4 1188-					
17	2232-711-003-10	SPRING/HT020/LH	*	1 1188-					
18	2232-711-004-10	SPRING/HT020/RH	*	1 1188-					
19	3888-726-200-00	MOTOR/LH ASSY	*	1 1188-					
20	2232-711-270-00	MOTOR/RH ASSY	*	1 1188-					
21	3888-218-001-00	TAPPINGSCREW/M5X16	*	6 1188-					
22	2232-711-011-00	COVER/MOTOR	*	2 1188-					
23	1729-662-340-00	SENSOR/ANGLE/110/R	*	2 1188-					
24	V120-364-001-00	SCREW,SP/M4X10	*	4 1188-					
25	2232-711-001-10	COVER/MARKER/LH	*	1 1188-			5N		
26	2232-711-002-10	COVER/MARKER/RH	*	1 1188-			5N		
27	2232-711-013-00	HOOK/MARKER	*	2 1188-					
28	2232-711-017-00	HOOK/MARKER/E16	*	2 1188-					
29	V362-260-008-00	NUT/WASHER/M8	*	2 1188-					

FIG.147 GUARD(PLATE/FRONT)SYSTEM

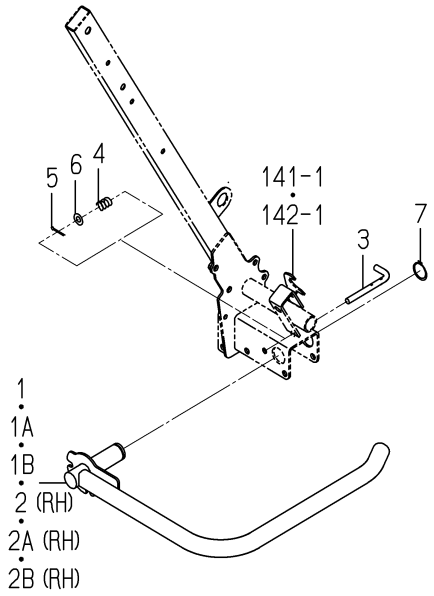

2232-713 -0100

KEY	PART CODE	DESCRIPTION	SPC	TYPE OF MODEL NP60E16		ITC	COL	GRP	REMARKS
1	2232-713-200-10	GUARD/RAIL/LH COMP	*	1 -60					
1A	2232-713-200-20	GUARD/RAIL/LH COMP	*	1 -629		1			
1B	2232-713-200-30	GUARD/RAIL/LH COMP	*	1 630-		1			
2	2232-713-210-10	GUARD/RAIL/RH COMP	*	1 -60					
2A	2232-713-210-20	GUARD/RAIL/RH COMP	*	1 -629		1			
2B	2232-713-210-30	GUARD/RAIL/RH COMP	*	1 630-		1			
3	2232-713-002-00	PIN/LOCK/STAND	*	2					
4	2190-805-012-00	SPRING,HC030	*	2					
5	V500-163-002-00	PIN,SPLIT/3X20	*	2					
6	V411-260-008-00	WASHER,PL/M8	*	2					
7	V704-140-025-00	RING,SNAP/25 C	*	2					

FIG.148 PLANTER(LH)SYSTEM

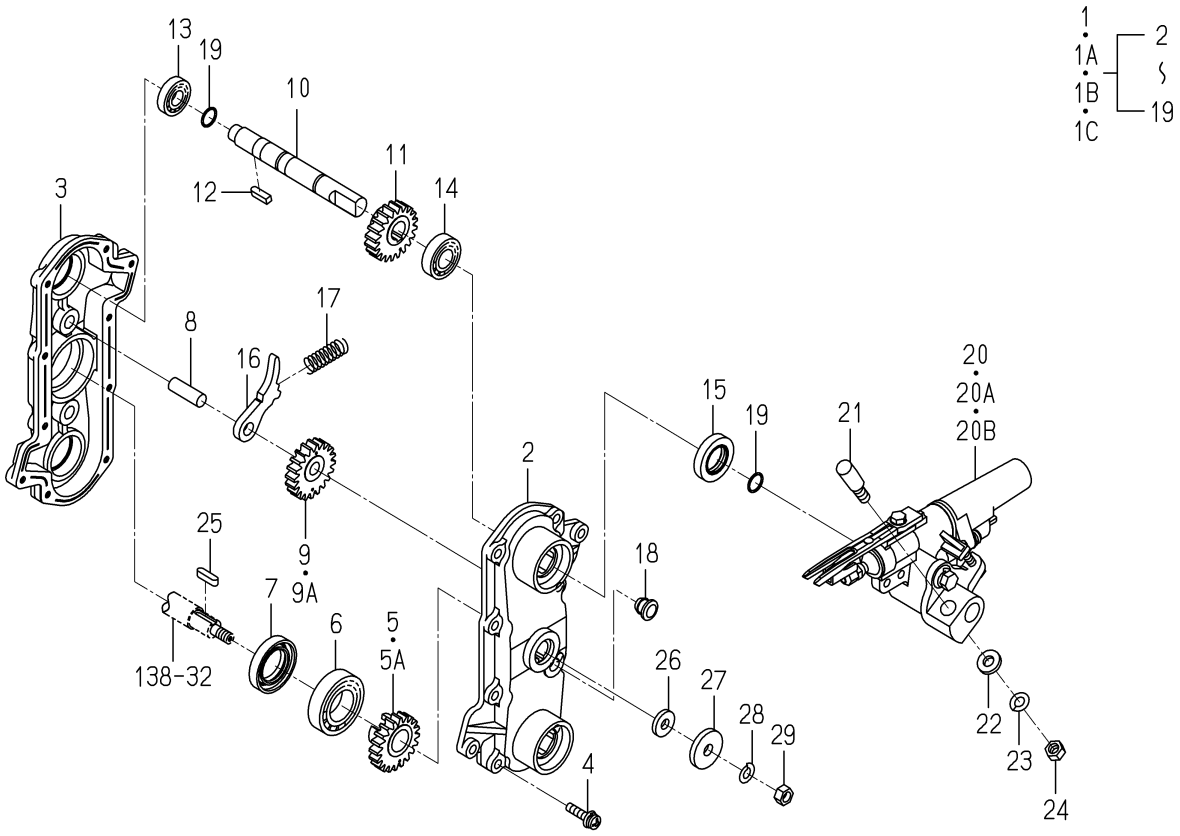

2204-738K-0100

KEY	PART CODE	DESCRIPTION	SPC	TYPE OF MODEL NP60E16		ITC	COL	GRP	REMARKS
1	2204-738-440-40	ROTARY PLANTING/K/LH	*	3 -60					
1A	2204-738-440-60	ROTARY PLANTING/K/LH	*	3 -680		1			
1B	2204-738-440-70	ROTARY PLANTING/K/LH	*	3 -1187		1			
1C	2204-738-440-80	ROTARY PLANTING/K/LH	*	3 1188-		1			
2	2204-738-340-10	CASE/ROTARY/OUT/LH	*	3					
3	2204-738-282-20	CASE/ROTARY/IN/LH	*	3					
4	V120-366-002-50	SCREW,SP/M6X25	*	30					
5	2204-738-273-00	GEAR,SUN/LH	*	3 -1187					
5A	2204-738-283-00	GEAR/SUN/LH/E	*	3 1188-					
6	V600-110-600-50	BEARING,RB/6005	*	3					
7	2142-736-224-00	SEAL,OIL	*	3					
8	2142-736-214-00	PIN,COUNTER,GEAR	*	6					
9	2204-738-274-00	GEAR,COUNTER	*	6 -1187					
9A	2204-738-284-00	GEAR/COUNTER/E	*	6 1188-					
10	2204-738-275-20	SHAFT/PLANTING ARM/L	*	6					
11	2204-738-277-00	GEAR/LH	*	6					
12	2142-736-271-00	KEY,05X05X18 PLUS	*	6					
13	V600-110-620-10	BEARING,RB/6201	*	6					
14	V600-110-600-20	BEARING,RB/6002	*	6					
15	2144-738-216-00	SEAL,OIL	*	6					
16	2161-738-611-00	ARM LH	*	6					
17	2142-736-221-00	SPRING/HC037	*	6					
18	2186-738-038-20	CAP/10	*	3					
19	2161-738-008-00	O-RING/OR	*	12					
20	2204-738-450-00	PLANTINGARM/K/L ASSY	*	6 -60					FIG 174
20A	2204-738-450-20	PLANTINGARM/K/L ASSY	*	6 -680		1			FIG 174
20B	2204-738-450-30	PLANTINGARM/K/L ASSY	*	6 681-		1			FIG 174
21	2204-738-313-00	PIN/LOCKED	*	6					
22	2204-738-323-00	WASHER/09X18X03	*	6					
23	V401-700-008-00	WASHER,SP/M8	*	6					

FIG.148 PLANTER(LH)SYSTEM

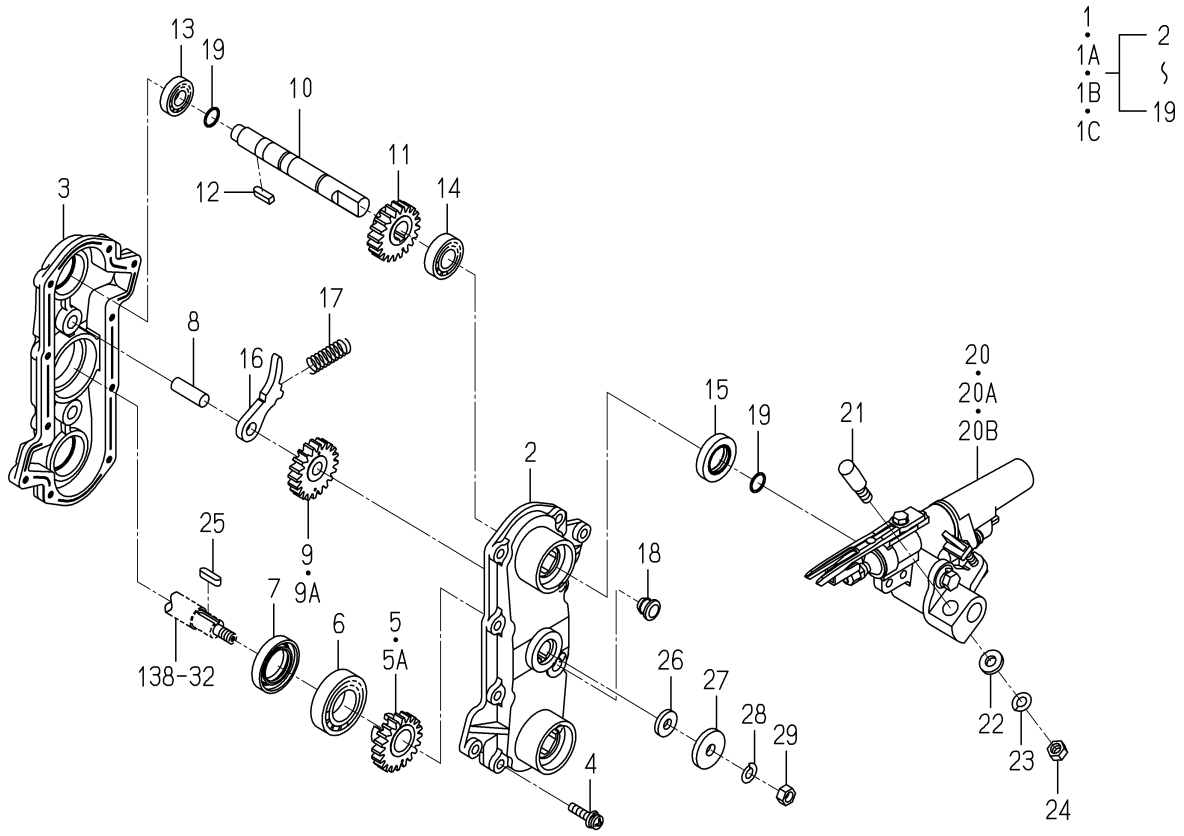

2204-738K-0100

KEY	PART CODE	DESCRIPTION	SPC	TYPE OF MODEL NP60E16		ITC	COL	GRP	REMARKS
24	V304-700-008-00	NUT,SUS/M8	*	6					
25	3750-231-013-00	KEY,SPROCKET	*	3					
26	2142-736-203-10	PACKING	*	3					
27	2132-161-005-00	WASHER,PULLEY	*	3					
28	V401-160-008-00	WASHER,SP/M8	*	3					
29	V304-460-008-00	NUT/M8/7T	*	3					

FIG.149 PLANTER(RH)SYSTEM

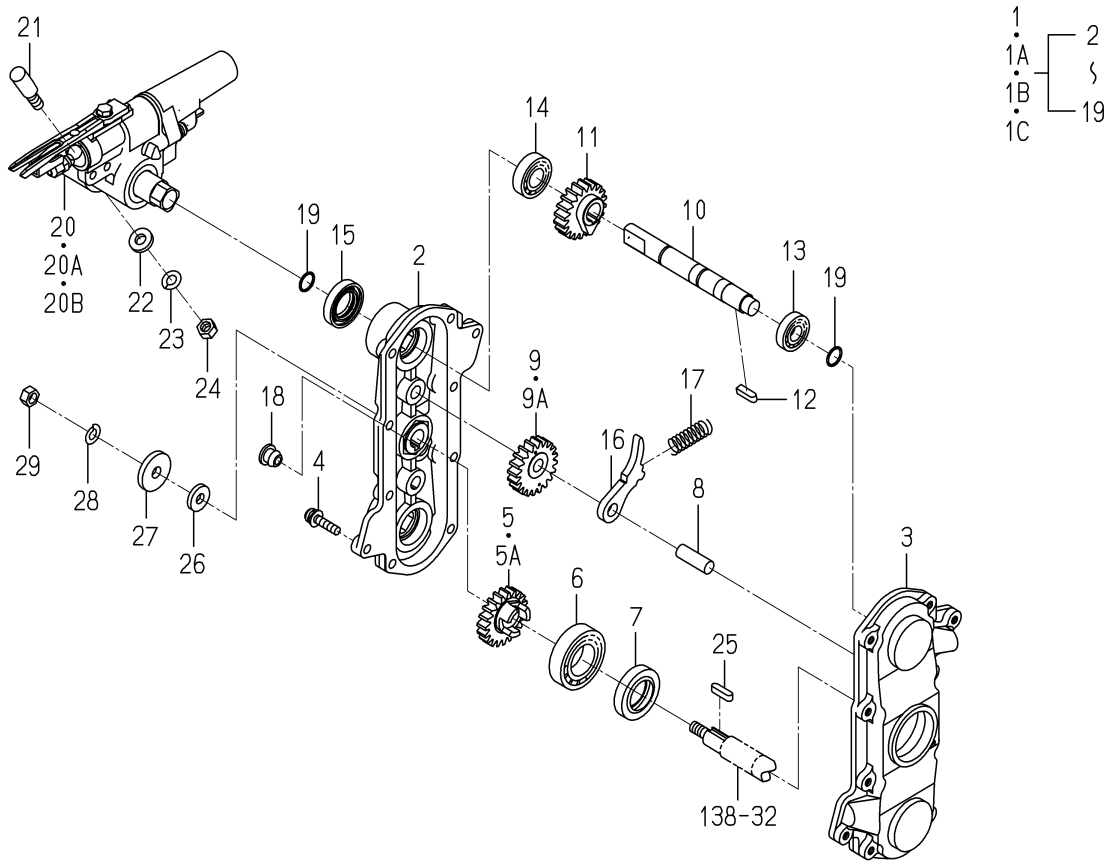

2204-739K-0100

KEY	PART CODE	DESCRIPTION	SPC	TYPE OF MODEL NP60E16		ITC	COL	GRP	REMARKS
1	2204-739-440-40	ROTARYPLANTING/K/RH	*	3 -60					
1A	2204-739-440-60	ROTARY PLANTING/K/RH	*	3 -680		1			
1B	2204-739-440-70	ROTARY PLANTING/K/RH	*	3 -1187		1			
1C	2204-739-440-80	ROTARY PLANTING/K/RH	*	3 1188-		1			
2	2204-739-340-10	CASE/ROTARY/OUT/RH	*	3					
3	2204-739-282-20	CASE/ROTARY/IN/RH	*	3					
4	V120-366-002-50	SCREW,SP/M6X25	*	30					
5	2204-739-273-00	GEAR/SUN/RH	*	3 -1187					
5A	2204-739-283-00	GEAR/SUN/RH/E	*	3 1188-					
6	V600-110-600-50	BEARING,RB/6005	*	3					
7	2142-736-224-00	SEAL,OIL	*	3					
8	2142-736-214-00	PIN,COUNTER,GEAR	*	6					
9	2204-738-274-00	GEAR,COUNTER	*	6 -1187					
9A	2204-738-284-00	GEAR/COUNTER/E	*	6 1188-					
10	2204-739-275-20	SHAFT/PLANTING ARM/R	*	6					
11	2204-739-277-00	GEAR/RH	*	6					
12	2142-736-271-00	KEY,05X05X18 PLUS	*	6					
13	V600-110-620-10	BEARING,RB/6201	*	6					
14	V600-110-600-20	BEARING,RB/6002	*	6					
15	2144-738-216-00	SEAL,OIL	*	6					
16	2161-739-611-00	ARM RH	*	6					
17	2142-736-221-00	SPRING/HC037	*	6					
18	2186-738-038-20	CAP/10	*	3					
19	2161-738-008-00	O-RING/OR	*	12					
20	2204-739-450-00	PLANTINGARM/K/R ASSY	*	6 -60					FIG 175
20A	2204-739-450-20	PLANTINGARM/K/R ASSY	*	6 -680		1			FIG 175
20B	2204-739-450-30	PLANTINGARM/K/R ASSY	*	6 681-		1			FIG 175
21	2204-738-313-00	PIN/LOCKED	*	6					
22	2204-738-323-00	WASHER/09X18X03	*	6					
23	V401-700-008-00	WASHER,SP/M8	*	6					

FIG.149 PLANTER(RH)SYSTEM

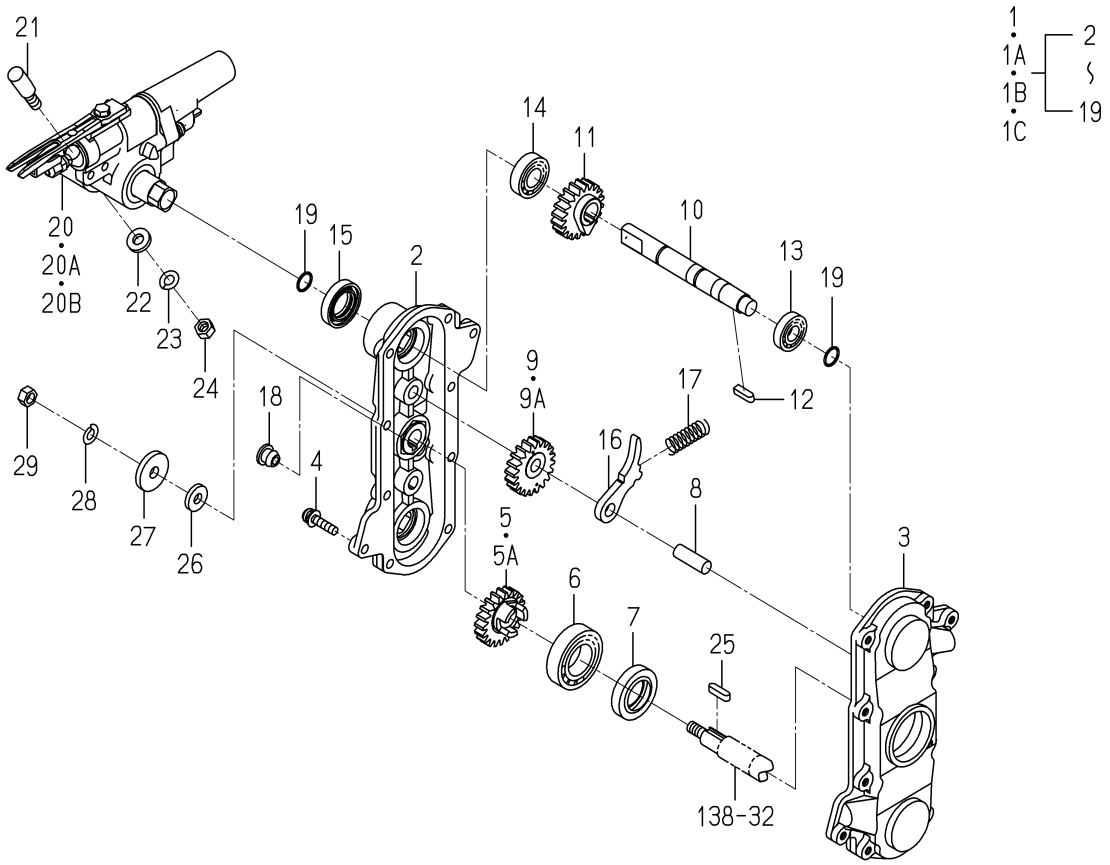

2204-739K-0100

KEY	PART CODE	DESCRIPTION	SPC	TYPE OF MODEL NP60E16		ITC	COL	GRP	REMARKS
24	V304-700-008-00	NUT,SUS/M8	*	6					
25	3750-231-013-00	KEY,SPROCKET	*	3					
26	2142-736-203-10	PACKING	*	3					
27	2132-161-005-00	WASHER,PULLEY	*	3					
28	V401-160-008-00	WASHER,SP/M8	*	3					
29	V304-460-008-00	NUT/M8/7T	*	3					

FIG.150 TANK(SEEDLING)SYSTEM

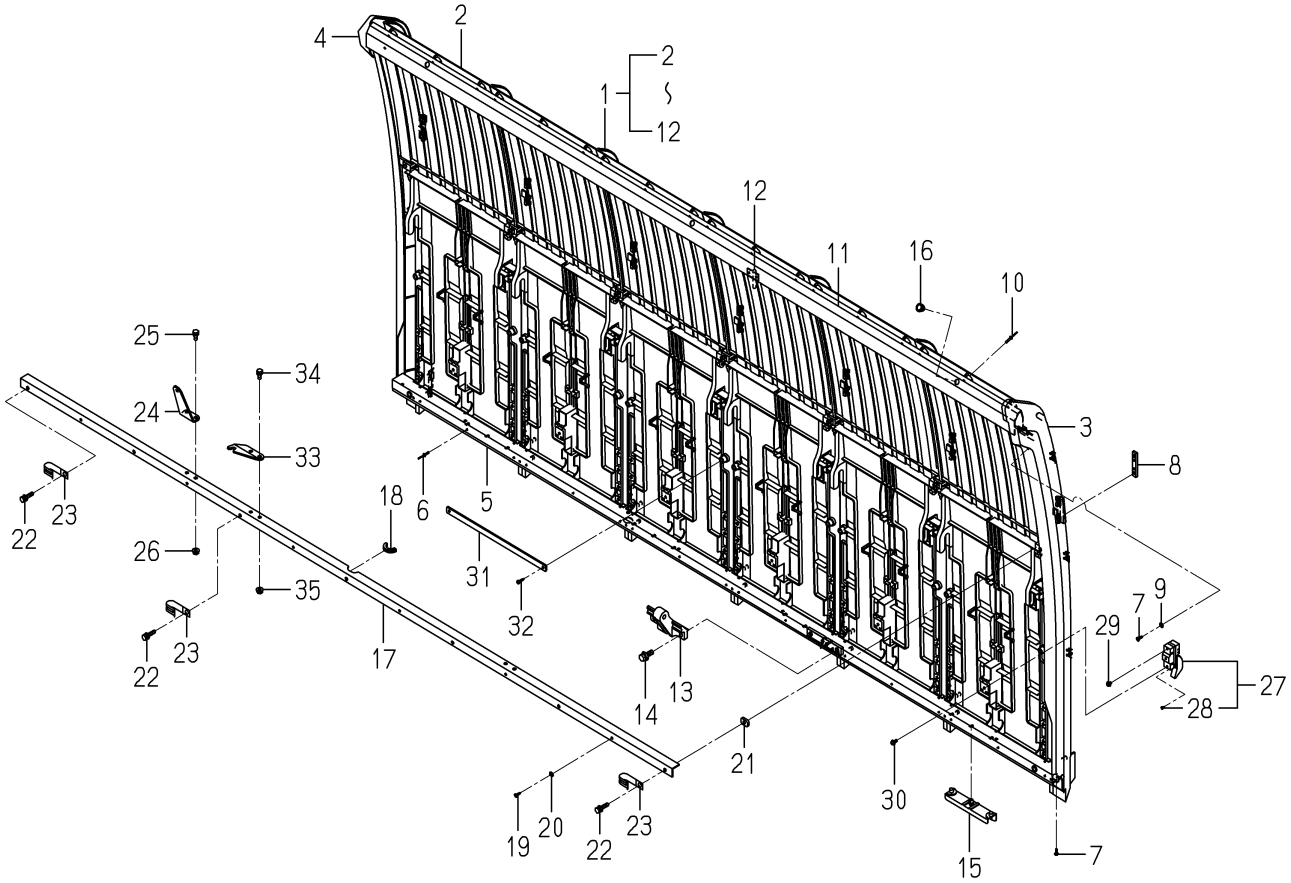

2232-801E-0100

KEY	PART CODE	DESCRIPTION	SPC	TYPE OF MODEL NP60E16		ITC	COL	GRP	REMARKS
1	2232-801-250-00	SEEDLINGTANK/6E COMP	*	1					
2	2161-831-231-30	SEEDLINGTANK	*	6					
3	2186-801-701-00	COVER,SEEDING TANK/M	*	1					
4	2186-801-702-00	COVER,SEEDING TANK/M	*	1					
5	2232-801-260-00	RAIL/LOWER/6E COMP	*	1					
6	2130-802-208-00	RIVET,POP	*	32					
7	2161-831-211-00	PIN, TAPPING	*	4					
8	2161-834-004-00	PLATE	*	14					
9	V411-260-004-00	WASHER,PL/M4	*	2					
10	2161-831-209-00	B-RIVET/ALMI	*	18					
11	2232-801-251-00	RAIL/SEEDLING TANK U	*	1					
12	2232-801-220-00	SENSOR/STOP SWITCH	*	1					
13	2232-801-001-00	ARM/SEEDLINGTANK	*	1					
14	V211-360-802-50	BOLT,SP/M8X25	*	2					
15	2161-831-003-10	SLIDER PLATE(E12)	*	4					
16	2186-738-038-20	CAP/10	*	3					
17	2232-801-003-00	RAIL/SEEDLING TANK/I	*	1					
18	2186-801-001-00	GROMMET/20/SEEDING T	*	1					
19	2161-831-211-00	PIN, TAPPING	*	6					
20	V411-260-004-00	WASHER,PL/M4	*	6					
21	2161-831-007-00	PLATE	*	7					
22	V210-360-602-50	BOLT,SP/M6X25	*	7					
23	1425-621-004-00	HOLDER/JE/9-9	*	3					
24	2232-801-006-00	PLATE/HOOK/SEEDLING	*	2					
25	V210-260-601-60	BOLT,S/M6X16	*	4					
26	V360-260-006-00	NUT/WASHER/M6	*	4					
27	2132-801-220-10	SWITCH ASSY	*	6					
28	V195-102-504-40	SCREW/TAPPING	*	6					
29	V120-364-000-80	SCREW,SP/M4X8	*	6					
30	V120-364-001-20	SCREW,SP/M4X12	*	6					

FIG.150 TANK(SEEDLING)SYSTEM

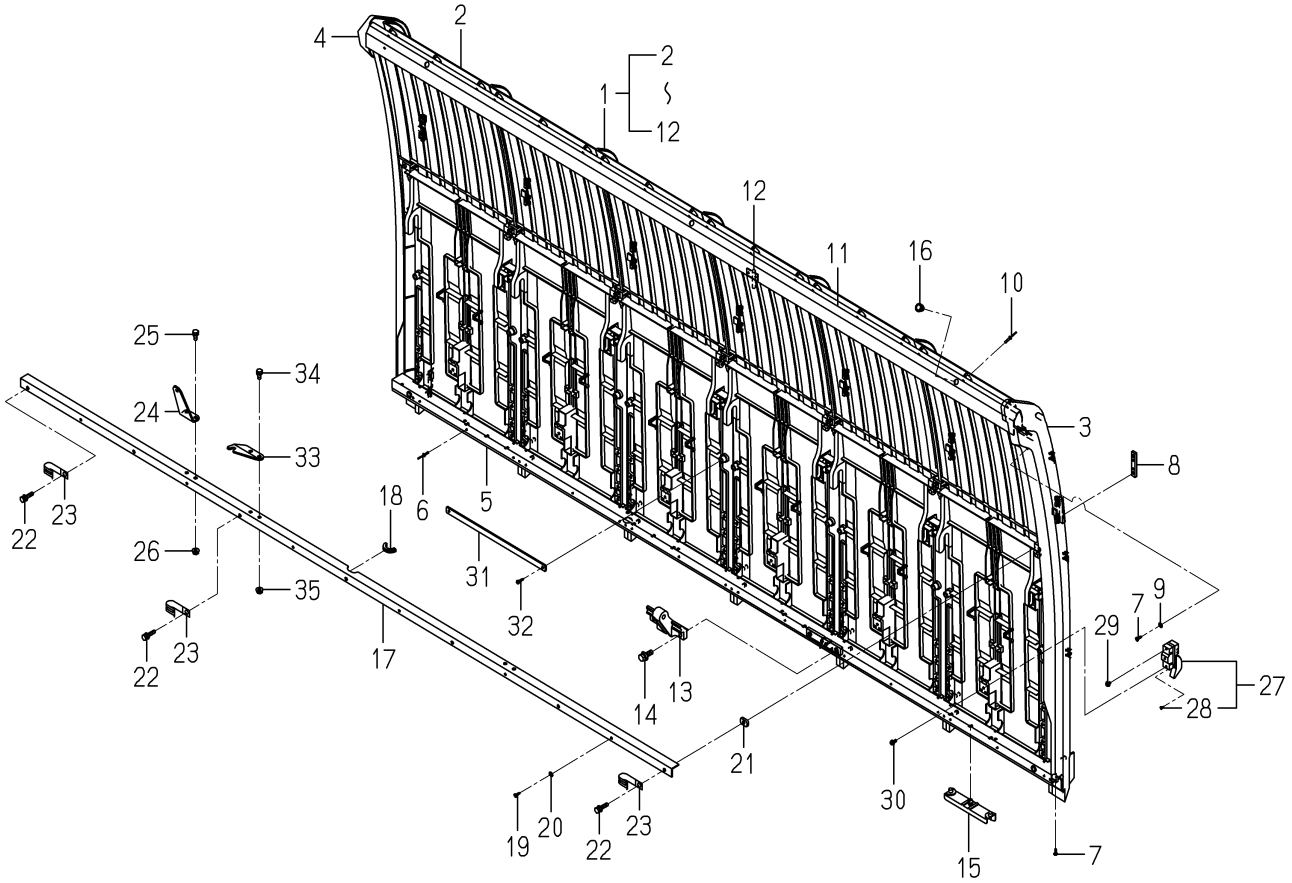

2232-801E-0100

KEY	PART CODE	DESCRIPTION	SPC	TYPE OF MODEL NP60E16		ITC	COL	GRP	REMARKS
31	2186-805-026-00	PLATE/1R/13X280	*	6					
32	V195-164-016-10	SCREW/TAPPING	*	12					
33	2232-801-005-00	PLATE/SEEDLING FEED	*	1					
34	V210-260-601-60	BOLT,S/M6X16	*	2					
35	V360-260-006-00	NUT/WASHER/M6	*	2					

FIG.151 LAMP(TURN SIGNAL)SYSTEM

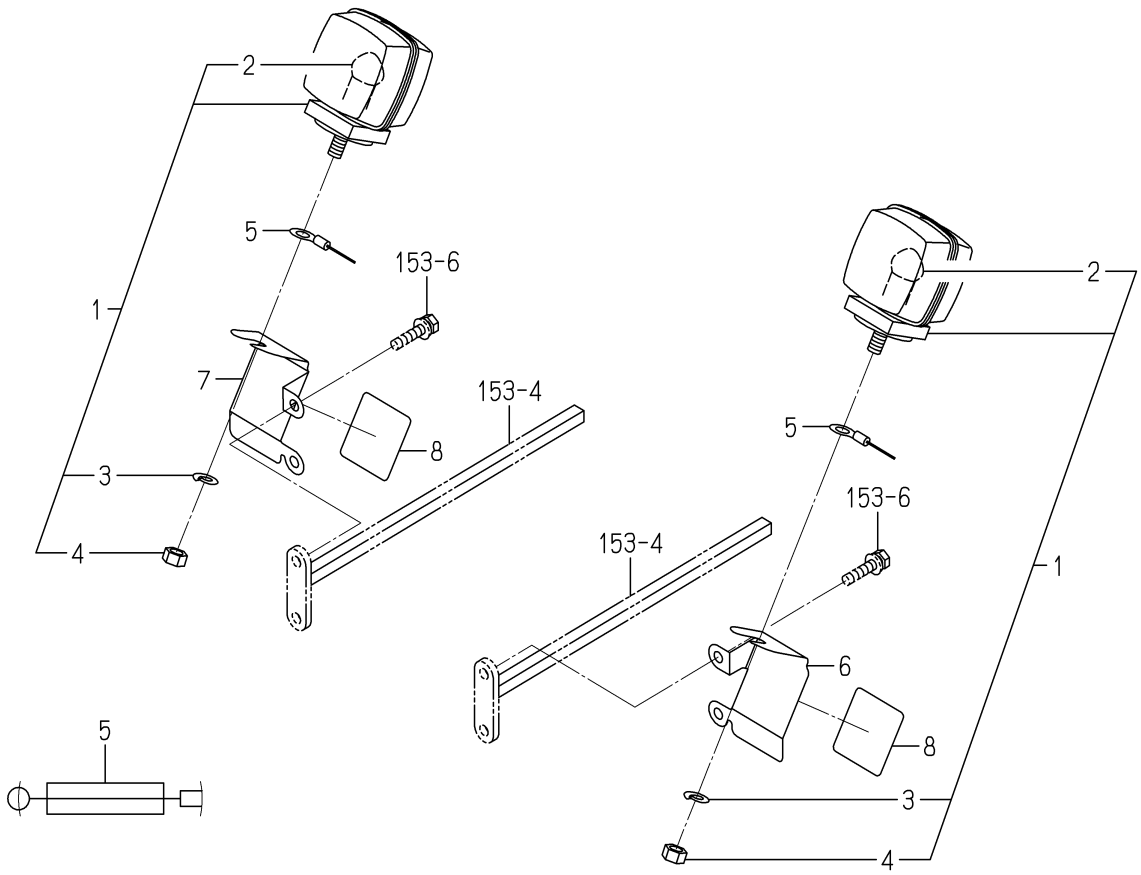

2232-802B-0100

KEY	PART CODE	DESCRIPTION	SPC	TYPE OF MODEL NP60E16		ITC	COL	GRP	REMARKS
1	2132-544-200-10	LAMP/TURNSIGNAL ASSY	*	2					
2	1444-621-242-00	BULB/12V 20W	*	2					
3	V401-160-008-00	WASHER,SP/M8	*	2					
4	V304-260-008-00	NUT/M8	*	2					
5	2186-802-051-00	HARNESS,WINKER WIRE/	*	2					
6	2232-802-051-00	PLATE/WINKER/LH	*	1					
7	2232-802-052-00	PLATE/WINKER/RH	*	1					
8	2194-901-016-00	LABEL/FRASH	*	2					

FIG.152 PLATE(FRONT)SYSTEM

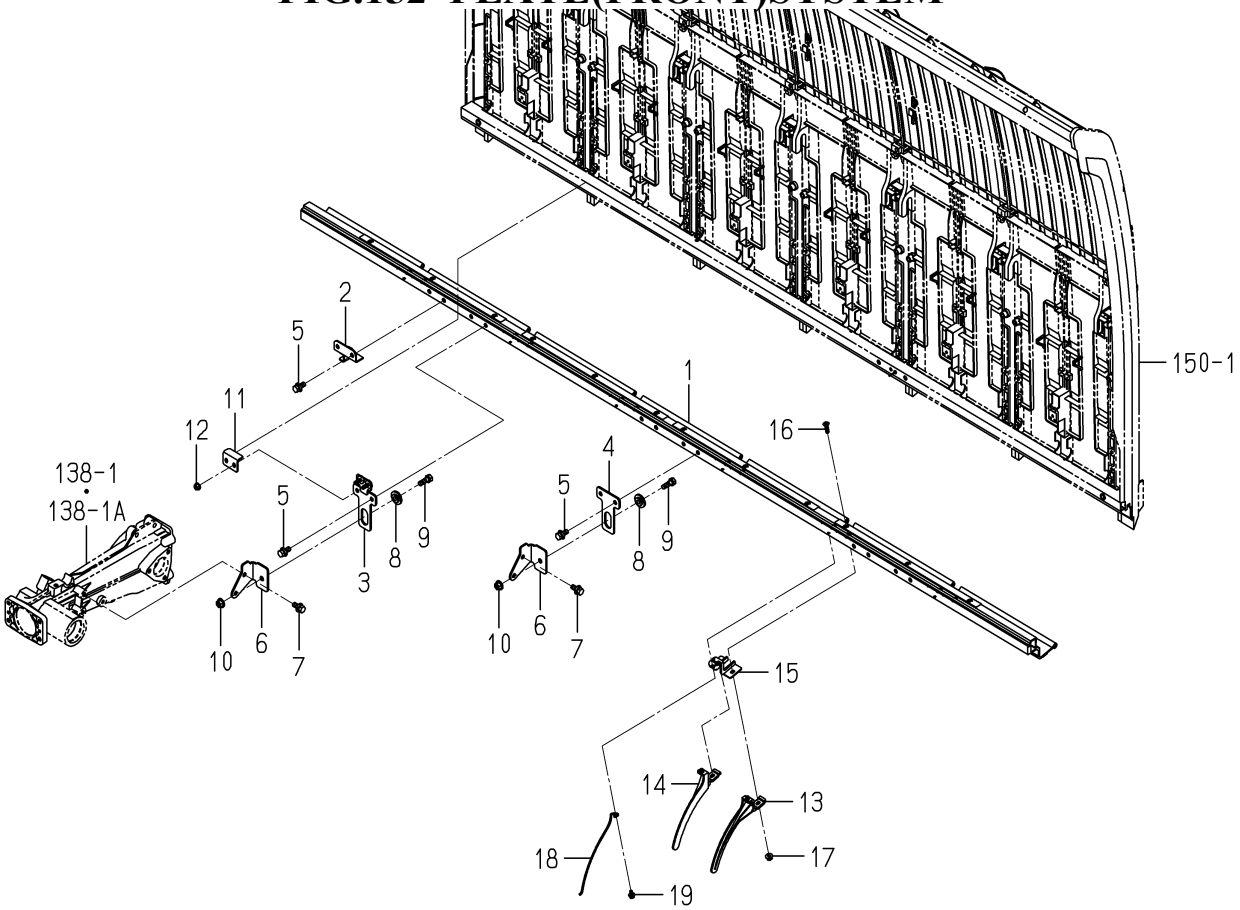

2232-803H-0100

KEY	PART CODE	DESCRIPTION	SPC	TYPE OF MODEL NP60E16		ITC	COL	GRP	REMARKS
1	2232-803-320-00	RAIL/TANK/NP6/E16	*	1					
2	2232-803-220-00	STAY/RAIL COMP	*	3					
3	2232-803-210-00	PLATE/SLIDER/HOOK	*	2					
4	2232-803-003-00	PLATE/SLIDER	*	1					
5	V211-360-802-00	BOLT,SP/M8X20	*	12					
6	2232-803-001-00	STAY/SLIDER/OUTER	*	3					
7	V211-360-802-00	BOLT,SP/M8X20	*	6					
8	2139-807-005-00	COLLAR SLIDE METAL	*	3					
9	V211-260-802-50	BOLT,S/M8X25	*	3					
10	V362-260-008-00	NUT/WASHER/M8	*	3					
11	2213-803-009-10	PLATE/STOPPER/TANK/8	*	2					
12	V360-260-006-00	NUT/WASHER/M6	*	4					
13	2204-803-015-20	GUIDE/SEEDLING/LH/PZ	*	6					
14	2204-803-016-20	GUIDE/SEEDLING/RH/PZ	*	6					
15	2204-803-350-00	PLATE/GUIDE/E16 COMP	*	6					
16	V112-706-002-00	SCREW,FLAT/M6X20	*	12					
17	2204-803-068-00	NUT/WASER/M6/SUS	*	12					
18	2204-803-025-00	WIRE,SEEDING GUIDE/P	*	6					
19	2204-803-024-00	BOLT/M5X12/SP/STAINL	*	6					

FIG.153 HOLDER(SEEDLING)SYSTEM

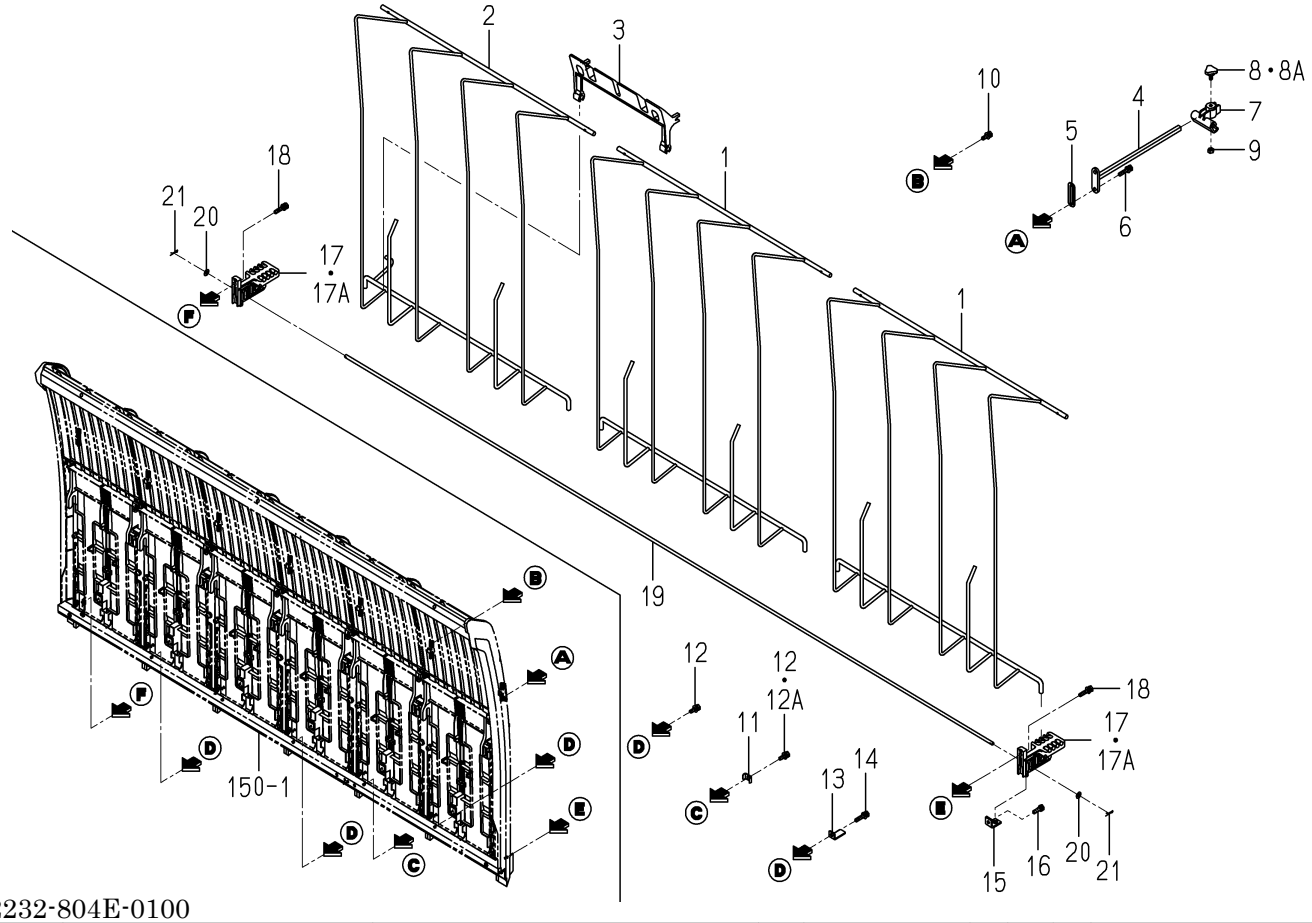

2232-804E-0100

KEY	PART CODE	DESCRIPTION	SPC	TYPE OF MODEL NP60E16		ITC	COL	GRP	REMARKS
1	2186-804-300-00	STAY,6/M COMP	*	2					
2	2204-804-400-00	FRAME/6/PZ	*	1					
3	2188-804-004-00	STOPPER,SEED/6/K	*	1					
4	2232-804-400-00	HOLDER/SEEDLING HOLD	*	4					
5	2213-804-007-00	SPACER/OUTER/RH	*	4					
6	V210-360-603-00	BOLT,SP/M6X30	*	8					
7	2232-804-001-00	HOLDER/SEEDLING HOLD	*	4					
8	1716-601-003-00	BOLT/KNOB/M06X13	*	4 -630					
8A	1716-601-003-10	BOLT/KNOB/M06X13	*	4 631-		1			
9	V301-260-006-00	NUT/M6	*	4					
10	V210-360-602-00	BOLT,SP/M6X20	*	6					
11	2204-831-001-00	PLATE/SEEDLINGTANK	*	3					
12	V210-360-602-00	BOLT,SP/M6X20	*	6 -60					
12A	V210-360-602-00	BOLT,SP/M6X20	*	3 61-					
13	2232-804-002-00	PLATE/L/12X30	*	3 61-					
14	V210-260-603-00	BOLT,S/M6X30	*	3 61-					
15	2161-834-007-00	PLATE	*	4					
16	V210-360-602-00	BOLT,SP/M6X20	*	4					
17	2161-834-001-40	HOLDER/RESISTANTBAR	*	4 -630					
17A	2161-834-001-50	HOLDER/RESISTANTBAR	*	4 631-		1			
18	V210-360-603-00	BOLT,SP/M6X30	*	4					
19	2186-804-008-00	SHAFT/6/K	*	1					
20	V411-260-006-00	WASHER,PL/M6	*	2					
21	2130-601-018-00	PIN,SNAP/6	*	2					

FIG.154 PLATE(HOLDER)SYSTEM(F TYPE EXCEPT R) (NO.1-60)

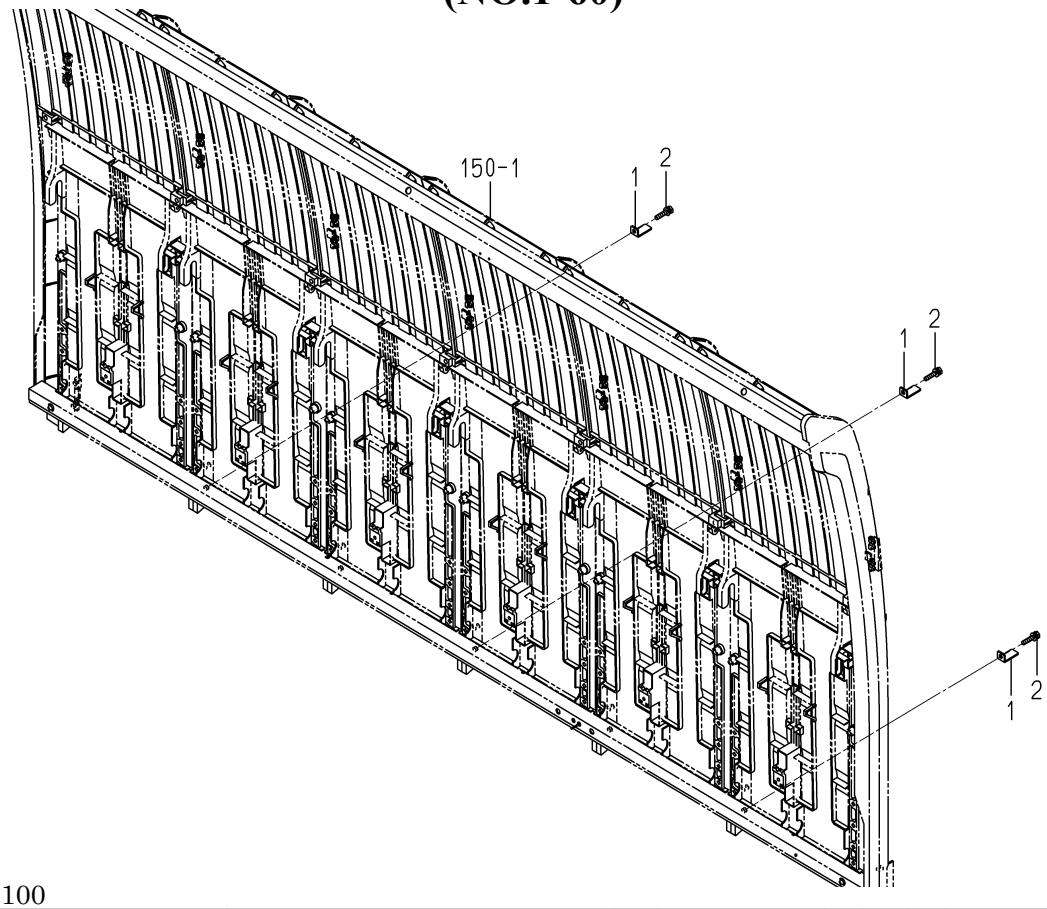

2232-804G-0100

KEY	PART CODE	DESCRIPTION	SPC	TYPE OF MODEL NP60E16		ITC	COL	GRP	REMARKS
1	2232-804-002-00	PLATE/L/12X30	*	3 -60					
2	V210-360-603-00	BOLT,SP/M6X30	*	3 -60					

FIG.155 FEED(SEEDLING)SYSTEM

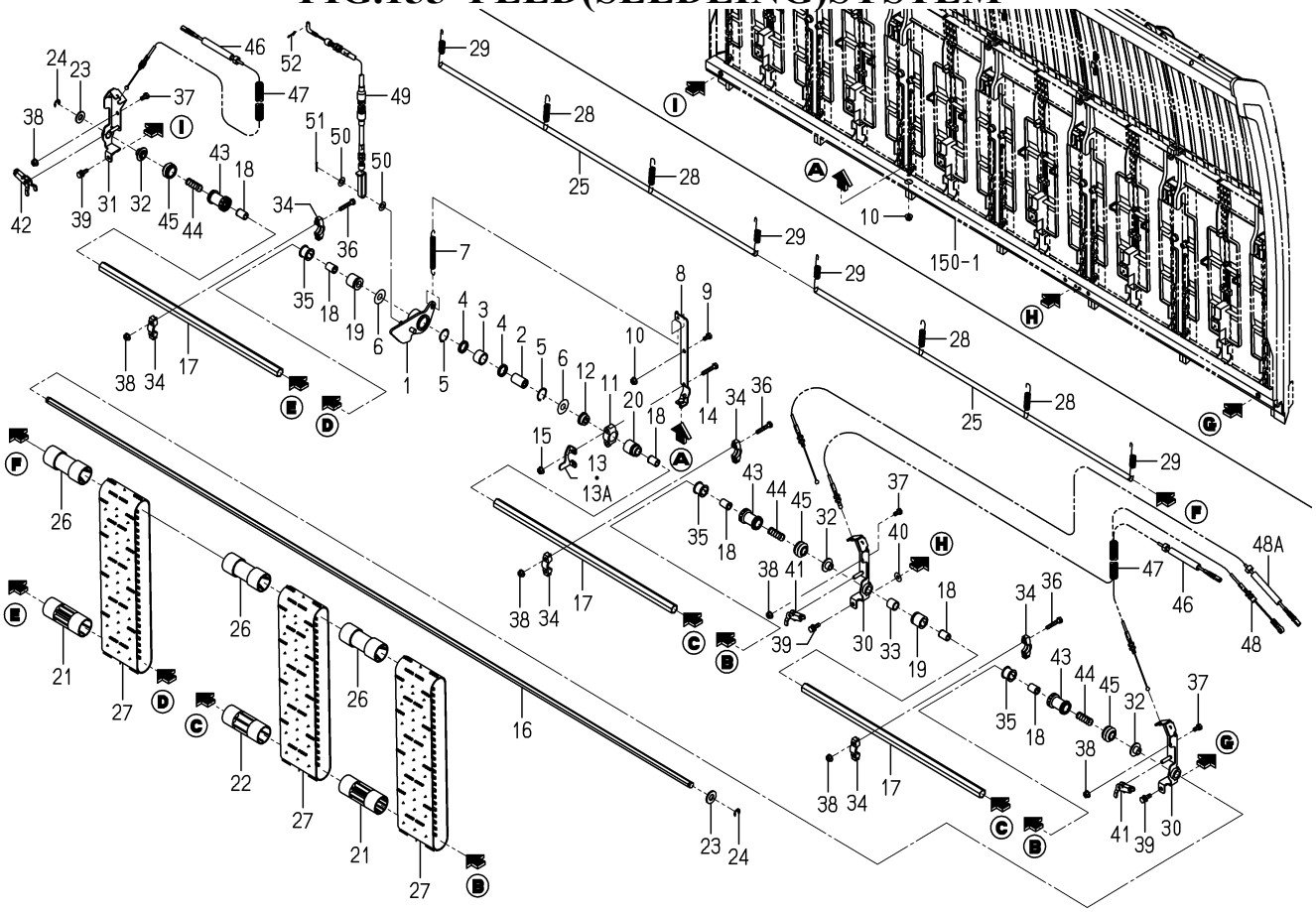

2232-805 -0100

KEY	PART CODE	DESCRIPTION	SPC	TYPE OF MODEL NP60E16		ITC	COL	GRP	REMARKS
1	2232-805-200-10	ARM/SEEDLINGFEED	*	1					
2	2232-805-013-20	SHAFT/ROLLER CLUTCH/	*	1					
3	2232-805-021-00	ROLLERCLUTCH/HF1816	*	1					
4	2232-805-022-10	OILSEAL/SDO18243.5/T	*	2					
5	2232-805-029-00	RING/SNAP	*	2					
6	2232-805-028-00	WASHER/12X30X01	*	2					
7	2232-805-011-10	SPRING/HE104	*	1					
8	2232-805-210-00	HOLDER/SPRING COMP	*	1					
9	V200-260-601-20	BOLT/M6X12	*	1					
10	V360-260-006-00	NUT/WASHER/M6	*	2					
11	2232-805-008-00	HOLDER/SEEDLING FEED	*	1					
12	2232-805-006-00	BUSH/SEEDLINGFEED/20	*	1					
13	2232-805-020-00	STOPPER/SEEDLING FEE	*	1 -60					
13A	2232-805-020-10	STOPPER/SEEDLING FEE	*	1 61-		1			
14	V200-260-603-50	BOLT/M6X35	*	2					
15	V360-260-006-00	NUT/WASHER/M6	*	2					
16	2232-805-001-00	SHAFT/SEEDLINGFEED/6	*	1					
17	2232-805-002-00	SHAFT/SEEDLINGFEED/2	*	3					
18	2186-805-003-00	BUSH,SEEDLING	*	6					
19	2204-805-005-10	BUSH/SEEDLING FEED/C	*	2					
20	2186-805-005-00	BUSH,SEEDING OUT	*	1					
21	2232-805-003-00	ROLLER/SEEDLINNG	*	3					
22	2186-805-004-20	ROLLER/SEEDLING	*	9					
23	V411-260-012-00	WASHER,PL/M12	*	2					
24	8841-725-002-00	RETAINING RING/E TYP	*	2					
25	2204-805-008-00	SHAFT	*	2					
26	2161-835-019-00	ROLLER,SEEDLING,UPPE	*	12					
27	2204-805-025-00	BELT/PLANT/PZ	*	12					
28	2161-835-021-00	SPRING,BELT/8	*	4					
29	2161-835-022-00	SPRING,BELT/4	*	4					

FIG.155 FEED(SEEDLING)SYSTEM

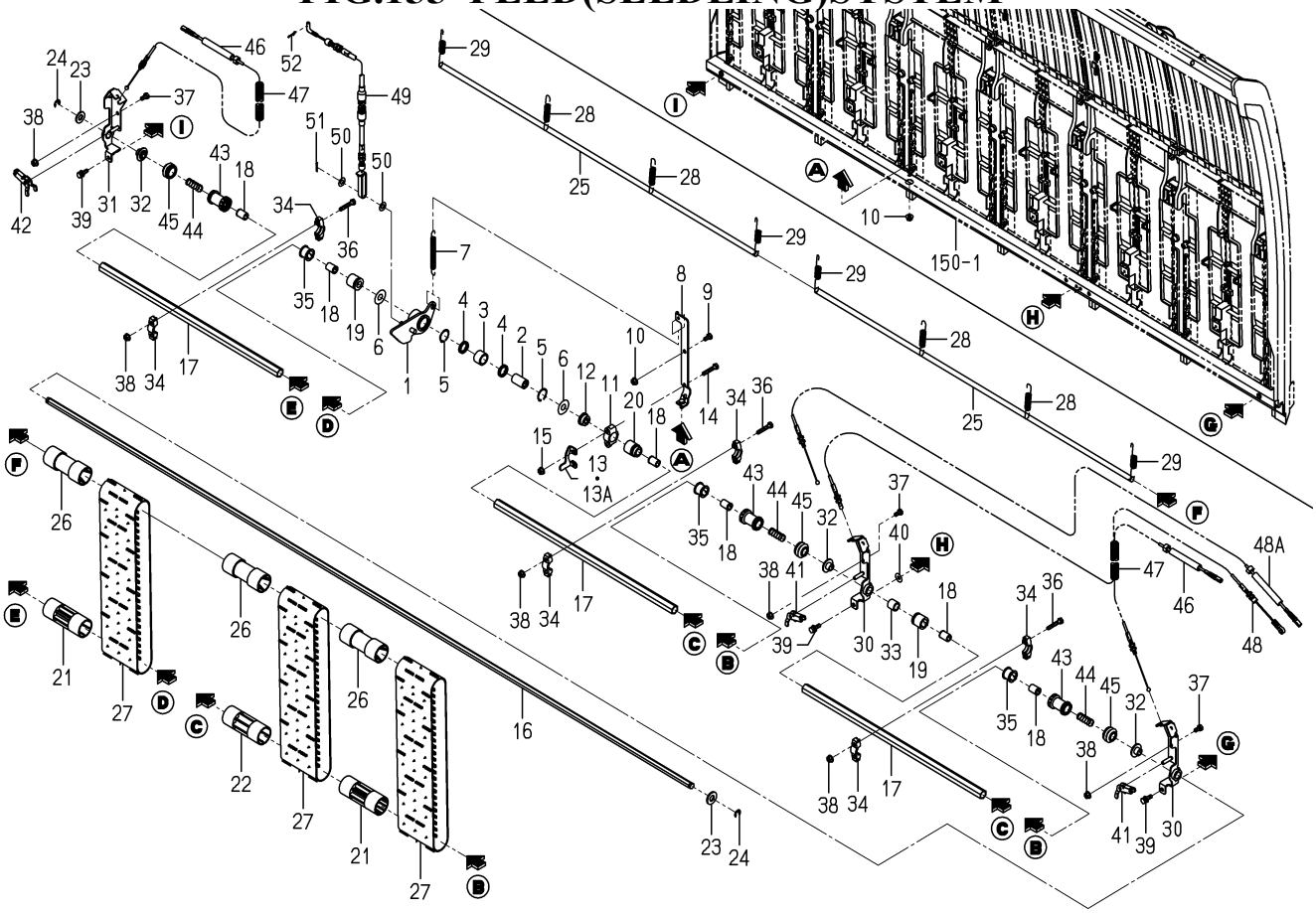

2232-805 -0100

KEY	PART CODE	DESCRIPTION	SPC	TYPE OF MODEL NP60E16		ITC	COL	GRP	REMARKS
30	2232-805-220-20	PLATE/CLUTCH/LH COMP	*	2					
31	2232-805-230-20	PLATE/CLUTCH/RH COMP	*	1					
32	2232-805-024-00	BUSH/HOLDER/CLUTCH/N	*	3					
33	2232-805-010-10	COLLAR/13X18X17	*	1					
34	2186-805-008-00	HOLDER,SEEDLONG,UPPE	*	6					
35	2186-805-011-00	BUSH,SEEDLING	*	3					
36	V200-260-603-50	BOLT/M6X35	*	6					
37	V200-260-601-20	BOLT/M6X12	*	6					
38	V360-260-006-00	NUT/WASHER/M6	*	12					
39	V210-360-602-00	BOLT,SP/M6X20	*	3					
40	3560-503-302-00	WASHER,WIRE TENSION	*	1					
41	2232-805-005-10	ARM/CLUTCH/SEEDLING	*	2					
42	2232-805-025-10	ARM/CLUTCH/SEEDLING	*	1					
43	2232-805-004-00	CLUTCH/SEEDLING FEED	*	3					
44	2232-805-007-00	SPRING/HC034	*	3					
45	2232-805-023-00	BOOT/SEEDLING FEED C	*	3					
46	2232-805-051-10	CABLE/SEEDLING FEED	*	2					
47	2232-805-056-00	CORRUGATED TUBE/10X6	*	2					
48	2232-805-057-20	CABLE/SEEDLING FEED	*	1 -1133					
48A	2232-805-065-00	CABLE/SEEDLING FEED/	*	1 1134-					
49	2232-805-014-20	CABLE/SEEDLING FEED	*	1					
50	V411-260-008-00	WASHER,PL/M8	*	2					
51	V500-162-501-50	PIN,SPLIT/2.5X15	*	1					
52	2161-735-005-00	PIN	*	1					

FIG.156 EXTENSION(TANK/SEEDLING)SYSTEM

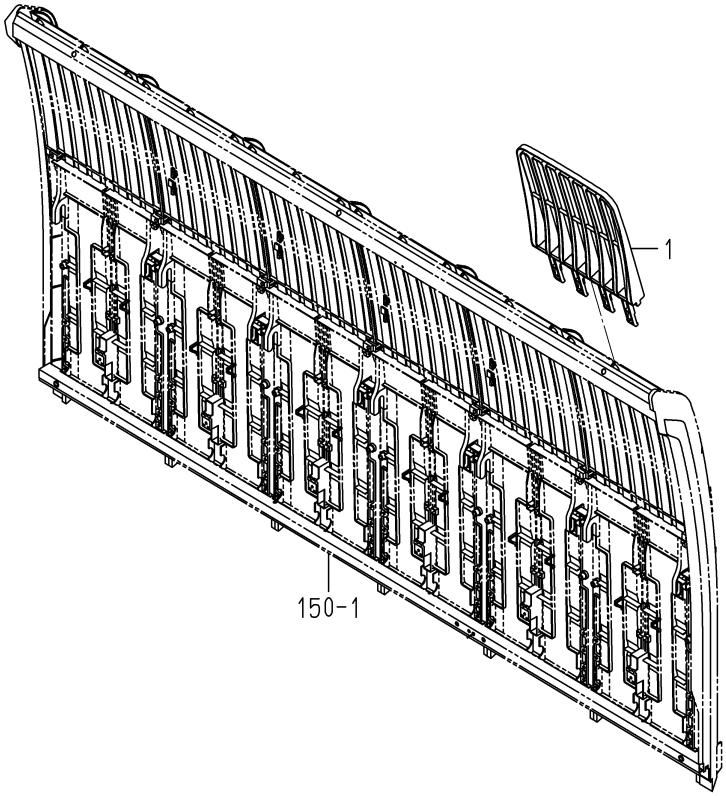

2232-806 -0100

KEY	PART CODE	DESCRIPTION	SPC	TYPE OF MODEL NP60E16		ITC	COL	GRP	REMARKS
1	2232-806-001-10	SEEDLINGTANK/EXTEND	*	6					

FIG.157 SWITCH(STOPPER/TANK/SLIDE)SYSTEM

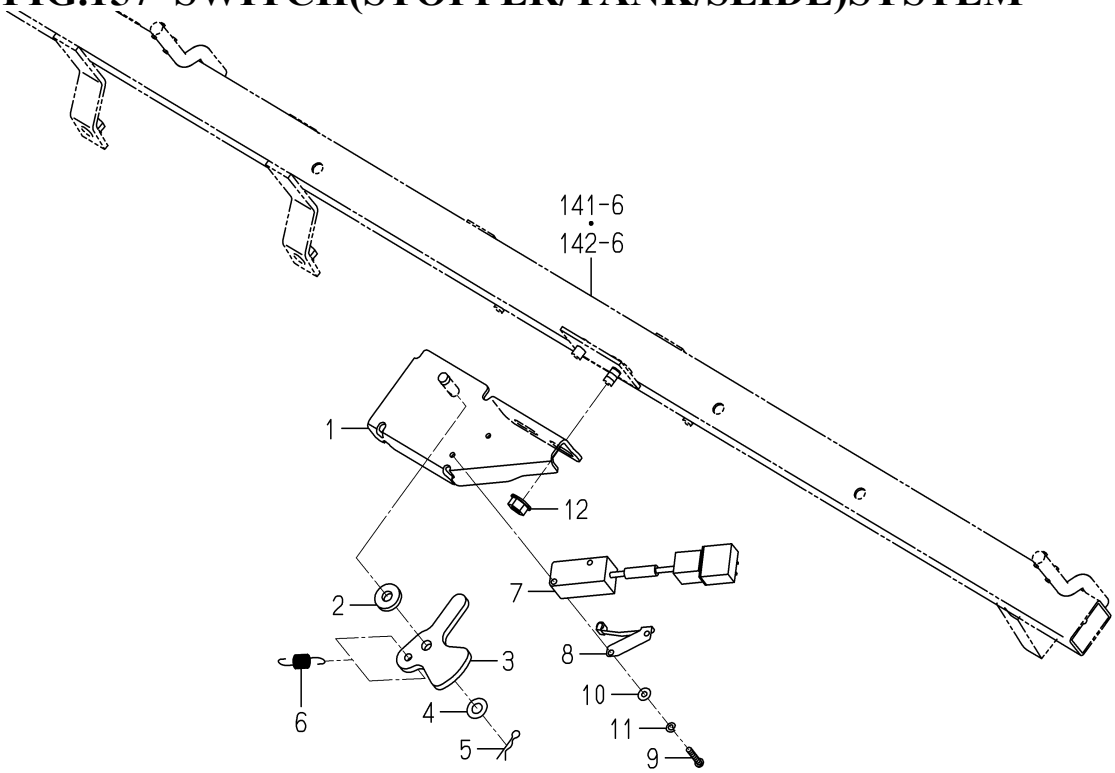

2232-807 -0100

KEY	PART CODE	DESCRIPTION	SPC	TYPE OF MODEL NP60E16		ITC	COL	GRP	REMARKS
1	2232-807-200-10	STAY/STOPSWITCH COMP	*	1		1			
2	2209-801-203-00	WASHER/07X16X03	*	1					
3	2232-807-001-00	CAM/STOPSWITCH	*	1					
4	V411-260-006-00	WASHER,PL/M6	*	1					
5	2130-601-018-00	PIN,SNAP/6	*	1					
6	2232-807-002-00	SPRING/STOPSWITCH	*	1					
7	3807-836-350-00	SWITCH ASSY	*	1					
8	3807-836-400-00	ACTUATOR ASSY	*	1					
9	V111-163-001-60	SCREW/M3X16	*	2					
10	V411-260-003-00	WASHER,PL/M3	*	2					
11	V401-160-003-00	WASHER,SP/M3	*	2					
12	V360-260-006-00	NUT/WASHER/M6	*	1					

FIG.158 LABEL(CAUTION)(D TYPE EXCEPT R)

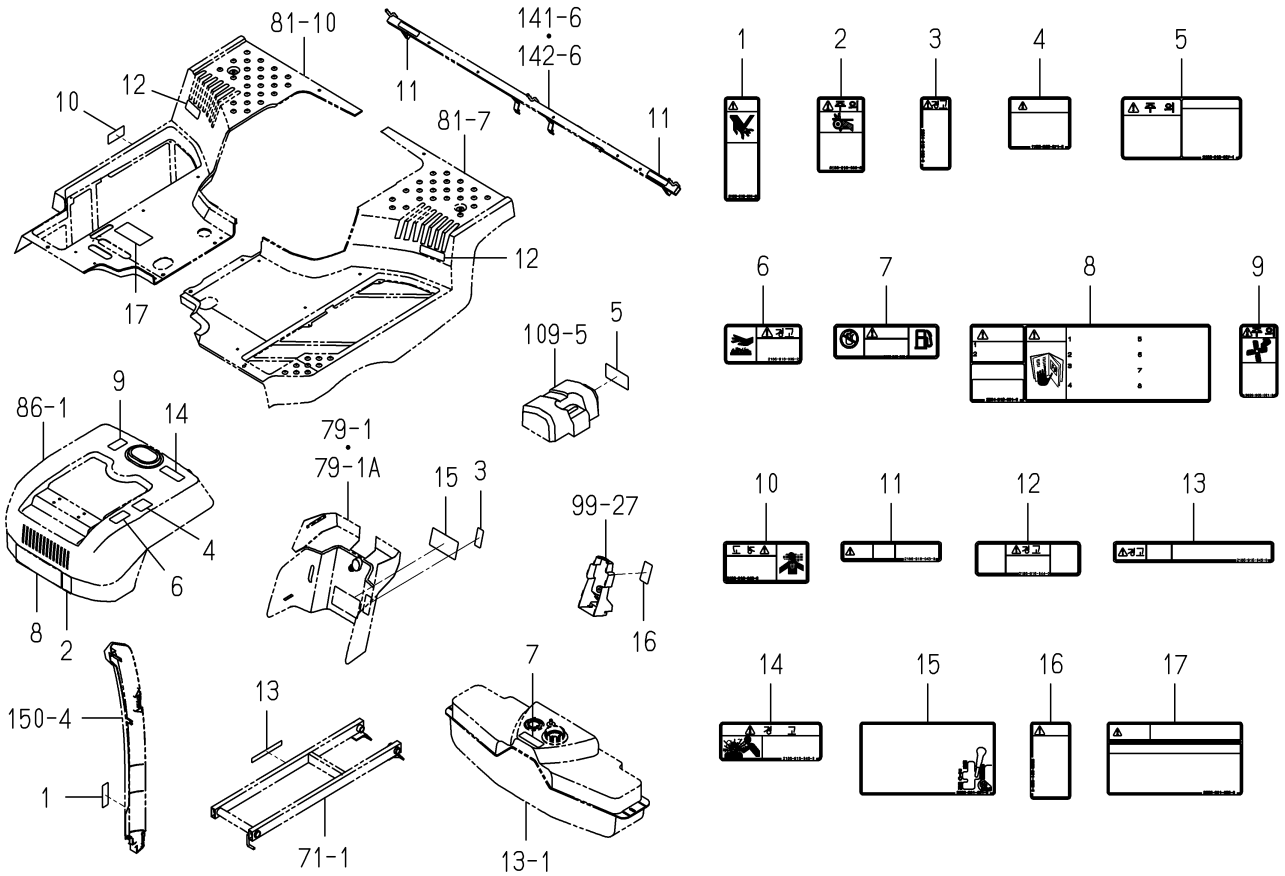

2232-901D-0100

KEY	PART CODE	DESCRIPTION	SPC	TYPE OF MODEL NP60E16		ITC	COL	GRP	REMARKS
1	2186-916-001-20	LABEL/CAUTION/CHECK/	*	1					
2	2186-916-002-20	LABEL/CAUTION/BELT/	*	1					
3	2204-916-002-00	LABEL/WARNING/PEDAL/	*	1					
4	1756-905-071-00	LABEL/CAUTION/COVER/	*	1					
5	2186-916-007-10	LABEL/CAUTION/BATTER	*	1					
6	2186-916-009-20	LABEL/WARNING/MUFFLE	*	1					
7	2186-916-010-30	LABEL/CAUTION	*	1					
8	2204-916-001-00	LABEL/CAUTION/DRIVE/	*	1					
9	3829-905-001-00	LABEL/CAUTION/FAN/K	*	1					
10	2186-916-042-00	LABEL/WARNING/GAS/K	*	1					
11	2186-916-043-00	LABEL/CAUTION/MARKER	*	2					
12	2186-916-044-00	LABEL/WARNING	*	2					
13	2186-916-045-00	LABEL/WARNING/SHAFT	*	1					
14	2186-916-046-00	LABEL/WARNING/RADIAT	*	1					
15	2232-901-031-00	LABEL/CAUTION/JUST/P	*	1					
16	2232-901-032-00	LABEL/WARNING/JUST/P	*	1					
17	2232-901-033-00	LABEL/WARNING/PLANT	*	1					

FIG.159 LABEL(CAUTION)(G TYPE EXCEPT R)

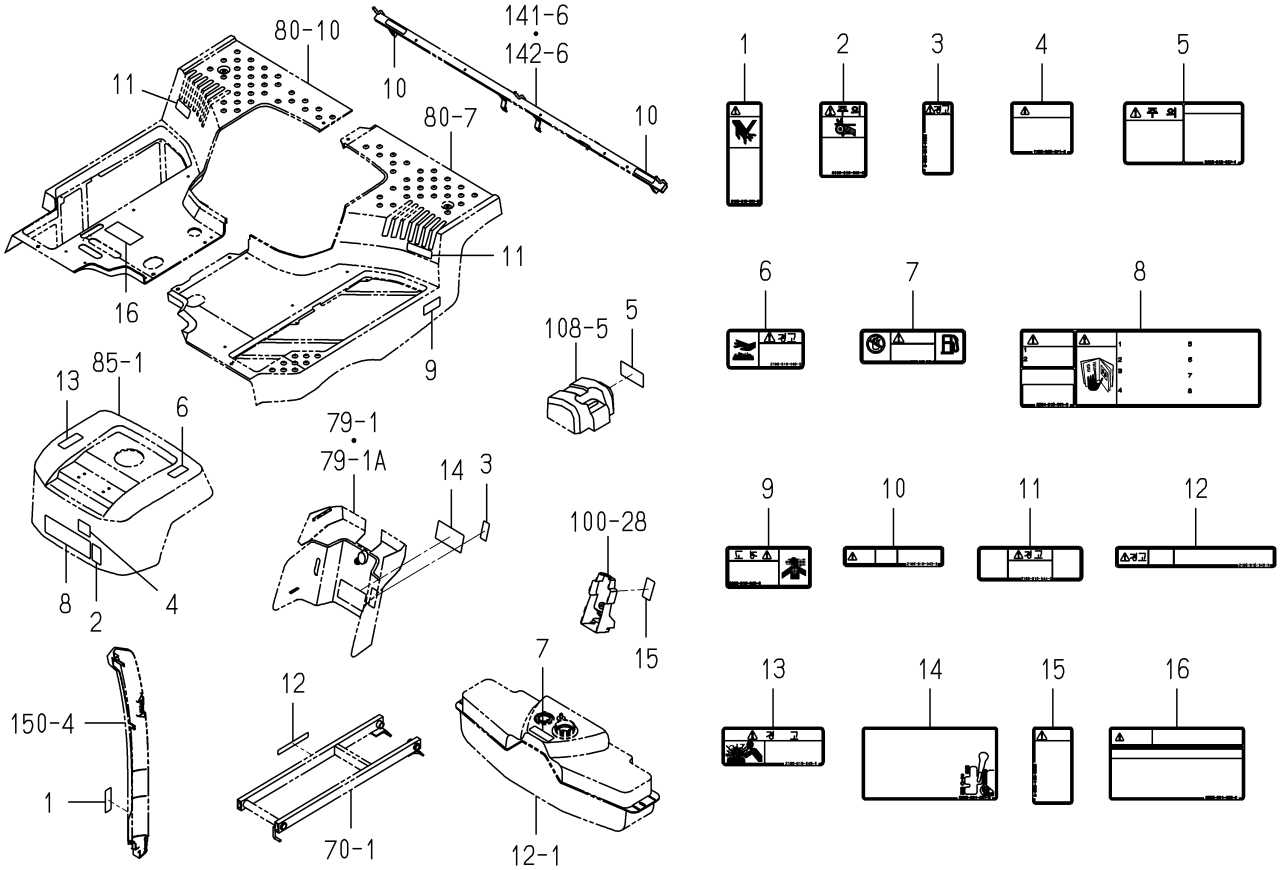

2232-901E-0100

KEY	PART CODE	DESCRIPTION	SPC	TYPE OF MODEL NP60E16		ITC	COL	GRP	REMARKS
1	2186-916-001-20	LABEL/CAUTION/CHECK/	*	1					
2	2186-916-002-20	LABEL/CAUTION/BELT/	*	1					
3	2204-916-002-00	LABEL/WARNING/PEDAL/	*	1					
4	1756-905-071-00	LABEL/CAUTION/COVER/	*	1					
5	2186-916-007-10	LABEL/CAUTION/BATTER	*	1					
6	2186-916-009-20	LABEL/WARNING/MUFFLE	*	1					
7	2186-916-010-30	LABEL/CAUTION	*	1					
8	2204-916-001-00	LABEL/CAUTION/DRIVE/	*	1					
9	2186-916-042-00	LABEL/WARNING/GAS/K	*	1					
10	2186-916-043-00	LABEL/CAUTION/MARKER	*	2					
11	2186-916-044-00	LABEL/WARNING	*	2					
12	2186-916-045-00	LABEL/WARNING/SHAFT	*	1					
13	2186-916-046-00	LABEL/WARNING/RADIAT	*	1					
14	2232-901-031-00	LABEL/CAUTION/JUST/P	*	1					
15	2232-901-032-00	LABEL/WARNING/JUST/P	*	1					
16	2232-901-033-00	LABEL/WARNING/PLANT	*	1					

FIG.160 LABEL(CAUTION)(GR TYPE)

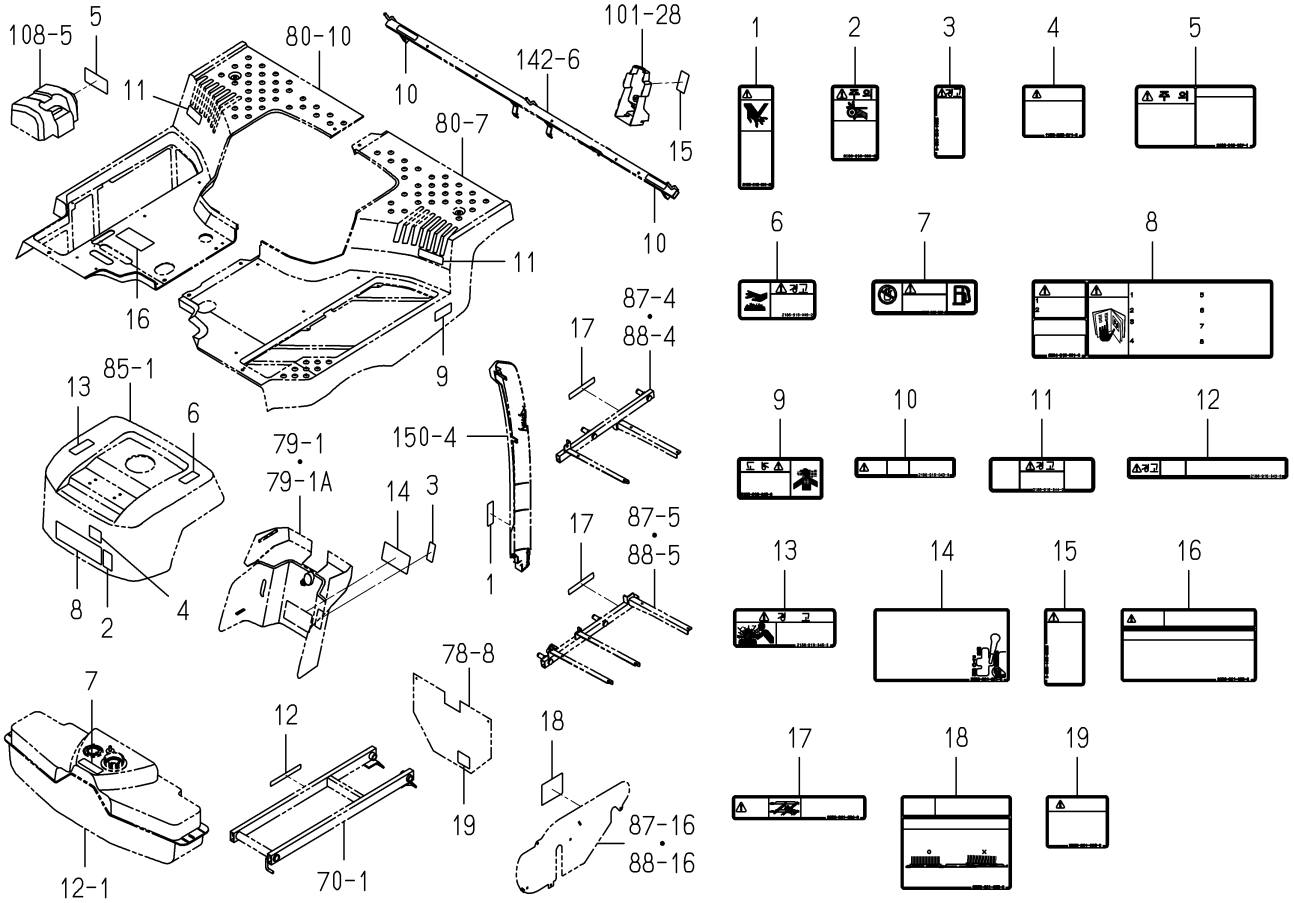

2232-901I-0100

KEY	PART CODE	DESCRIPTION	SPC	TYPE OF MODEL NP60E16		ITC	COL	GRP	REMARKS
1	2186-916-001-20	LABEL/CAUTION/CHECK/	*	1					
2	2186-916-002-20	LABEL/CAUTION/BELT/	*	1					
3	2204-916-002-00	LABEL/WARNING/PEDAL/	*	1					
4	1756-905-071-00	LABEL/CAUTION/COVER/	*	1					
5	2186-916-007-10	LABEL/CAUTION/BATTER	*	1					
6	2186-916-009-20	LABEL/WARNING/MUFFLE	*	1					
7	2186-916-010-30	LABEL/CAUTION	*	1					
8	2204-916-001-00	LABEL/CAUTION/DRIVE/	*	1					
9	2186-916-042-00	LABEL/WARNING/GAS/K	*	1					
10	2186-916-043-00	LABEL/CAUTION/MARKER	*	2					
11	2186-916-044-00	LABEL/WARNING	*	2					
12	2186-916-045-00	LABEL/WARNING/SHAFT	*	1					
13	2186-916-046-00	LABEL/WARNING/RADIAT	*	1					
14	2232-901-031-00	LABEL/CAUTION/JUST/P	*	1					
15	2232-901-032-00	LABEL/WARNING/JUST/P	*	1					
16	2232-901-033-00	LABEL/WARNING/PLANT	*	1					
17	2232-901-034-00	LABEL/CAUTION/Z LINK	*	2					
18	2232-901-035-00	LABEL/CAUTION/SEEDLI	*	1					
19	2232-901-036-00	LABEL/CAUTION/WASHIN	*	1					

FIG.161 LABEL(CAUTION)(DR TYPE)

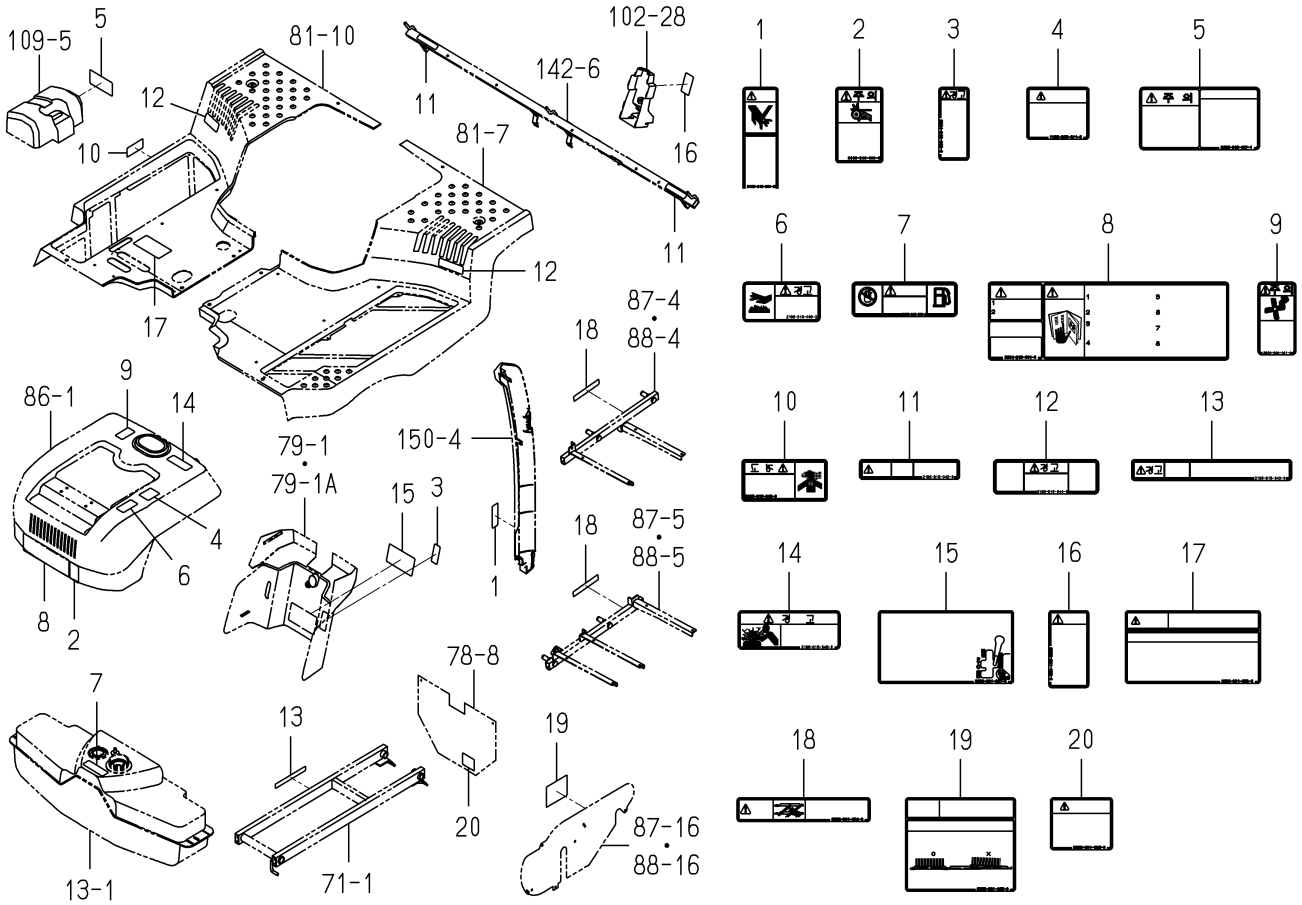

2232-901J-0100

KEY	PART CODE	DESCRIPTION	SPC	TYPE OF MODEL NP60E16		ITC	COL	GRP	REMARKS
1	2186-916-001-20	LABEL/CAUTION/CHECK/	*	1					
2	2186-916-002-20	LABEL/CAUTION/BELT/	*	1					
3	2204-916-002-00	LABEL/WARNING/PEDAL/	*	1					
4	1756-905-071-00	LABEL/CAUTION/COVER/	*	1					
5	2186-916-007-10	LABEL/CAUTION/BATTER	*	1					
6	2186-916-009-20	LABEL/WARNING/MUFFLE	*	1					
7	2186-916-010-30	LABEL/CAUTION	*	1					
8	2204-916-001-00	LABEL/CAUTION/DRIVE/	*	1					
9	3829-905-001-00	LABEL/CAUTION/FAN/K	*	1					
10	2186-916-042-00	LABEL/WARNING/GAS/K	*	1					
11	2186-916-043-00	LABEL/CAUTION/MARKER	*	2					
12	2186-916-044-00	LABEL/WARNING	*	2					
13	2186-916-045-00	LABEL/WARNING/SHAFT	*	1					
14	2186-916-046-00	LABEL/WARNING/RADIAT	*	1					
15	2232-901-031-00	LABEL/CAUTION/JUST/P	*	1					
16	2232-901-032-00	LABEL/WARNING/JUST/P	*	1					
17	2232-901-033-00	LABEL/WARNING/PLANT	*	1					
18	2232-901-034-00	LABEL/CAUTION/Z LINK	*	2					
19	2232-901-035-00	LABEL/CAUTION/SEEDLI	*	1					
20	2232-901-036-00	LABEL/CAUTION/WASHIN	*	1					

FIG.162 ORNAMENT&LABEL(G TYPE EXCEPT R)

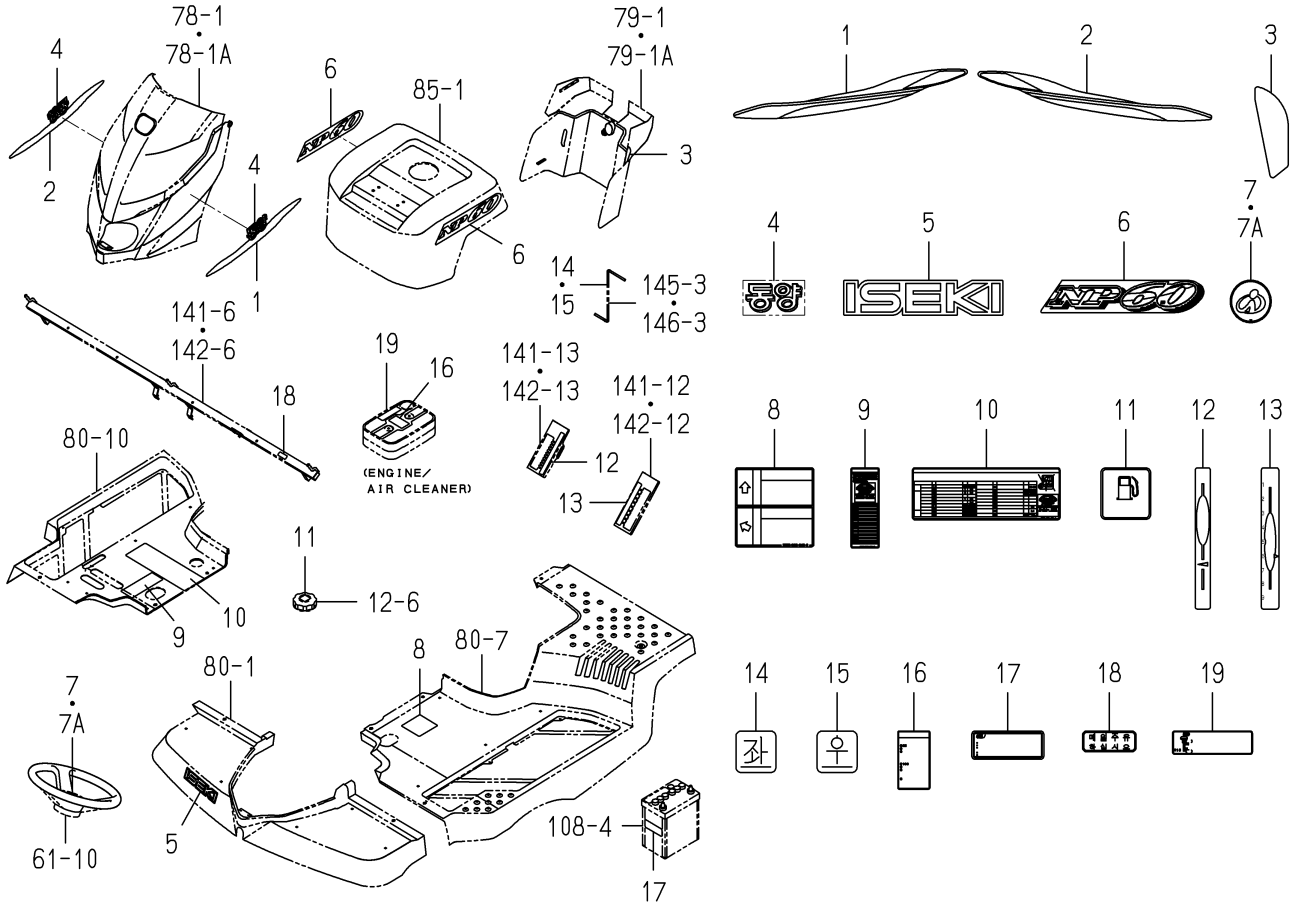

2232-912J-0100

KEY	PART CODE	DESCRIPTION	SPC	TYPE OF MODEL NP60E16		ITC	COL	GRP	REMARKS
1	2232-912-003-00	MOLDING/HOOD/LH	*	1					
2	2232-912-004-00	MOLDING/HOOD/RH	*	1					
3	2232-912-027-00	LABEL/HOOD/REAR	*	1					
4	2232-912-054-00	ORNAMENT/TONGYANG/NP	*	2 61-					
5	1716-901-016-00	ORNAMENT/ISEKI	*	1					
6	2232-912-006-00	ORNAMENT/NP60	*	2					
7	2232-912-021-00	ORNAMENT/STEERING	*	1 -630					
7A	2232-912-021-10	ORNAMENT/STEERING	*	1 631-		1			
8	2232-912-046-00	LABEL/OILING/NP/E16	*	1					
9	2232-912-058-00	LABEL/ERROR VIEW/NP/	*	1 633-					
10	2232-912-059-00	LABEL/CONTROLLER SET	*	1 633-					
11	2213-916-008-00	LABEL/GASOLINE/K	*	1					
12	2232-912-047-00	LABEL/SEEDLING PICKI	*	1					
13	2232-912-048-00	LABEL/DEPTH/E16	*	1					
14	2190-916-007-00	LABEL/LEFT/E16	*	1					
15	2190-916-008-00	LABEL/RIGHT/E16	*	1					
16	2186-916-032-20	LABEL/MANUAL/CLEANER	*	1					
17	2186-916-035-10	LABEL/BATTERY/K	*	1					
18	2186-916-019-10	LABEL/OIL/K	*	1					
19	2213-916-060-00	LABEL/OIL LEVEL/FD/E	*	1					

FIG.163 ORNAMENT&LABEL(D TYPE EXCEPT R)

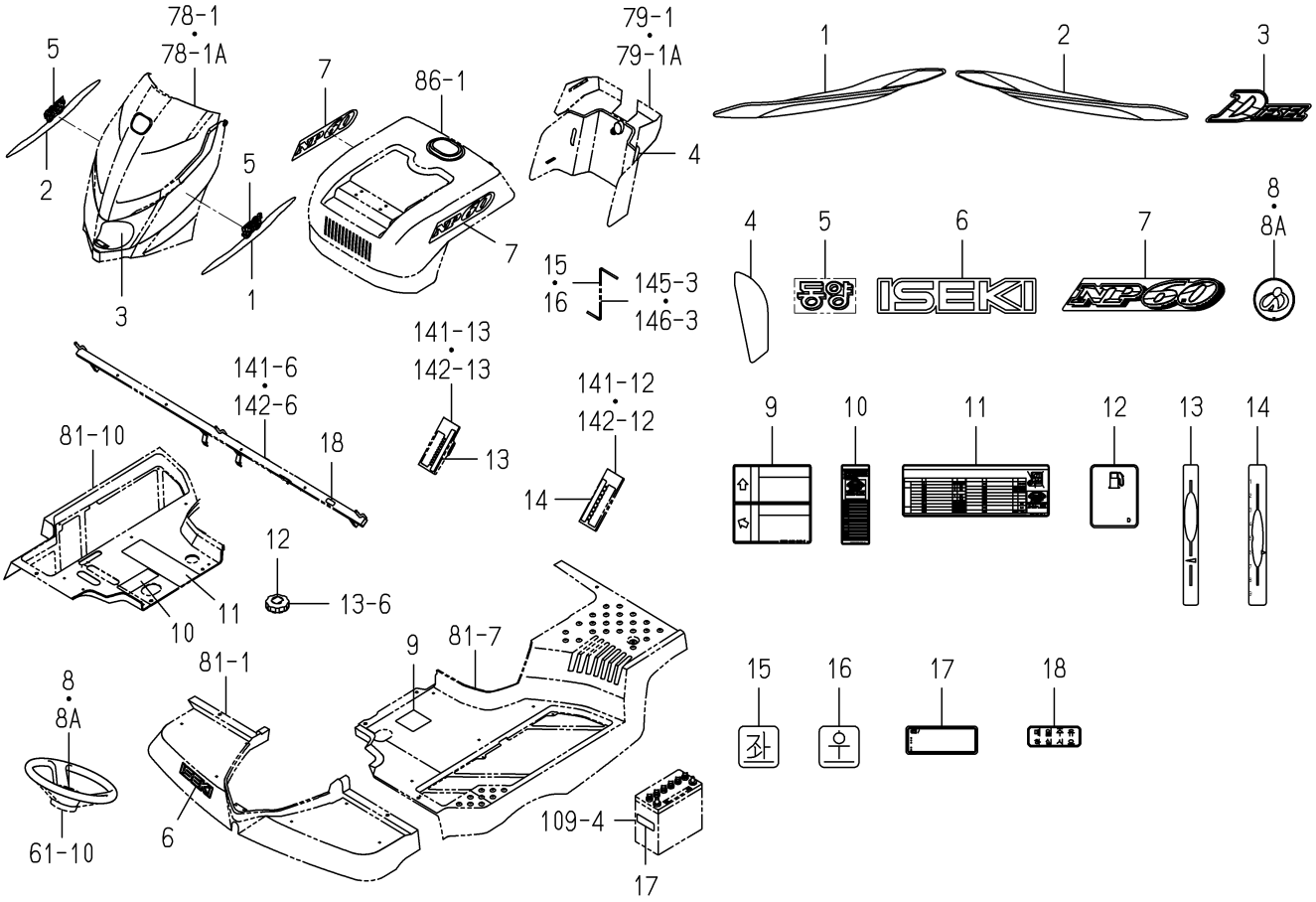

2232-912K-0100

KEY	PART CODE	DESCRIPTION	SPC	TYPE OF MODEL NP60E16		ITC	COL	GRP	REMARKS
1	2232-912-003-00	MOLDING/HOOD/LH	*	1					
2	2232-912-004-00	MOLDING/HOOD/RH	*	1					
3	2233-912-002-00	ORNAMENT/DIESEL	*	1					
4	2232-912-027-00	LABEL/HOOD/REAR	*	1					
5	2232-912-054-00	ORNAMENT/TONGYANG/NP	*	2 61-					
6	1716-901-016-00	ORNAMENT/ISEKI	*	1					
7	2232-912-006-00	ORNAMENT/NP60	*	2					
8	2232-912-021-00	ORNAMENT/STEERING	*	1 -630					
8A	2232-912-021-10	ORNAMENT/STEERING	*	1 631-		1			
9	2232-912-046-00	LABEL/OILING/NP/E16	*	1					
10	2232-912-058-00	LABEL/ERROR VIEW/NP/	*	1 633-					
11	2232-912-059-00	LABEL/CONTROLLER SET	*	1 633-					
12	2213-916-005-00	LABEL/DIESELFUEL/K	*	1					
13	2232-912-047-00	LABEL/SEEDLING PICKI	*	1					
14	2232-912-048-00	LABEL/DEPTH/E16	*	1					
15	2190-916-007-00	LABEL/LEFT/E16	*	1					
16	2190-916-008-00	LABEL/RIGHT/E16	*	1					
17	2186-916-035-10	LABEL/BATTERY/K	*	1					
18	2186-916-019-10	LABEL/OIL/K	*	1					

FIG.164 ORNAMENT&LABEL(GR TYPE)

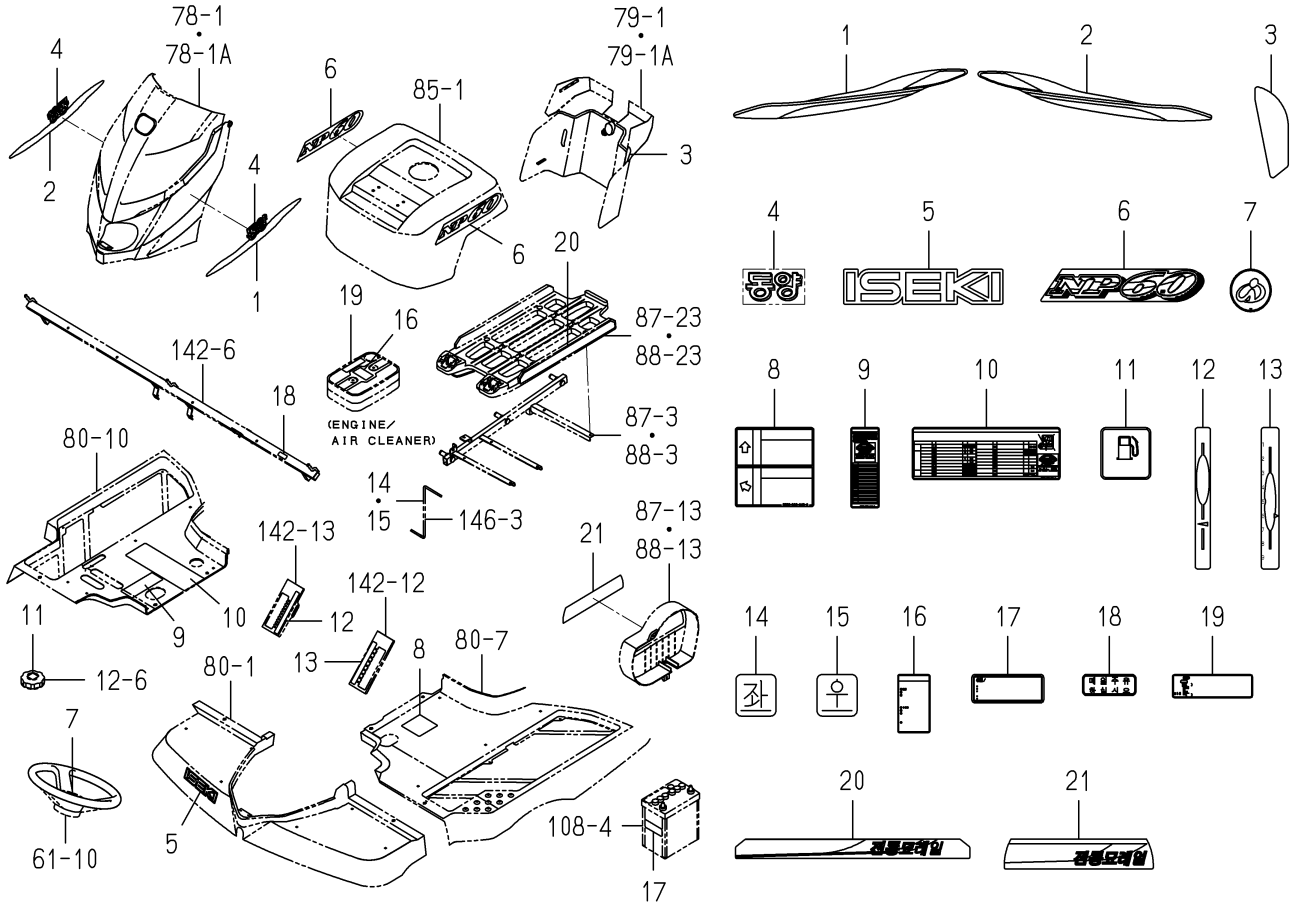

2232-912P-0100

KEY	PART CODE	DESCRIPTION	SPC	TYPE OF MODEL NP60E16		ITC	COL	GRP	REMARKS
1	2232-912-003-00	MOLDING/HOOD/LH	*	1					
2	2232-912-004-00	MOLDING/HOOD/RH	*	1					
3	2232-912-027-00	LABEL/HOOD/REAR	*	1					
4	2232-912-054-00	ORNAMENT/TONGYANG/NP	*	2					
5	1716-901-016-00	ORNAMENT/ISEKI	*	1					
6	2232-912-006-00	ORNAMENT/NP60	*	2					
7	2232-912-021-10	ORNAMENT/STEERING	*	1					
8	2232-912-046-00	LABEL/OILING/NP/E16	*	1					
9	2232-912-058-00	LABEL/ERROR VIEW/NP/	*	1					
10	2232-912-059-00	LABEL/CONTROLLER SET	*	1					
11	2213-916-008-00	LABEL/GASOLINE/K	*	1					
12	2232-912-047-00	LABEL/SEEDLING PICKI	*	1					
13	2232-912-048-00	LABEL/DEPTH/E16	*	1					
14	2190-916-007-00	LABEL/LEFT/E16	*	1					
15	2190-916-008-00	LABEL/RIGHT/E16	*	1					
16	2186-916-032-20	LABEL/MANUAL/CLEANER	*	1					
17	2186-916-035-10	LABEL/BATTERY/K	*	1					
18	2186-916-019-10	LABEL/OIL/K	*	1					
19	2213-916-060-00	LABEL/OIL LEVEL/FD/E	*	1					
20	2232-912-037-00	ORNAMENT/NAERAIL/1/E	*	1					
21	2232-912-038-00	ORNAMENT/NAERAIL/2/E	*	1					

FIG.165 ORNAMENT&LABEL(DR TYPE)

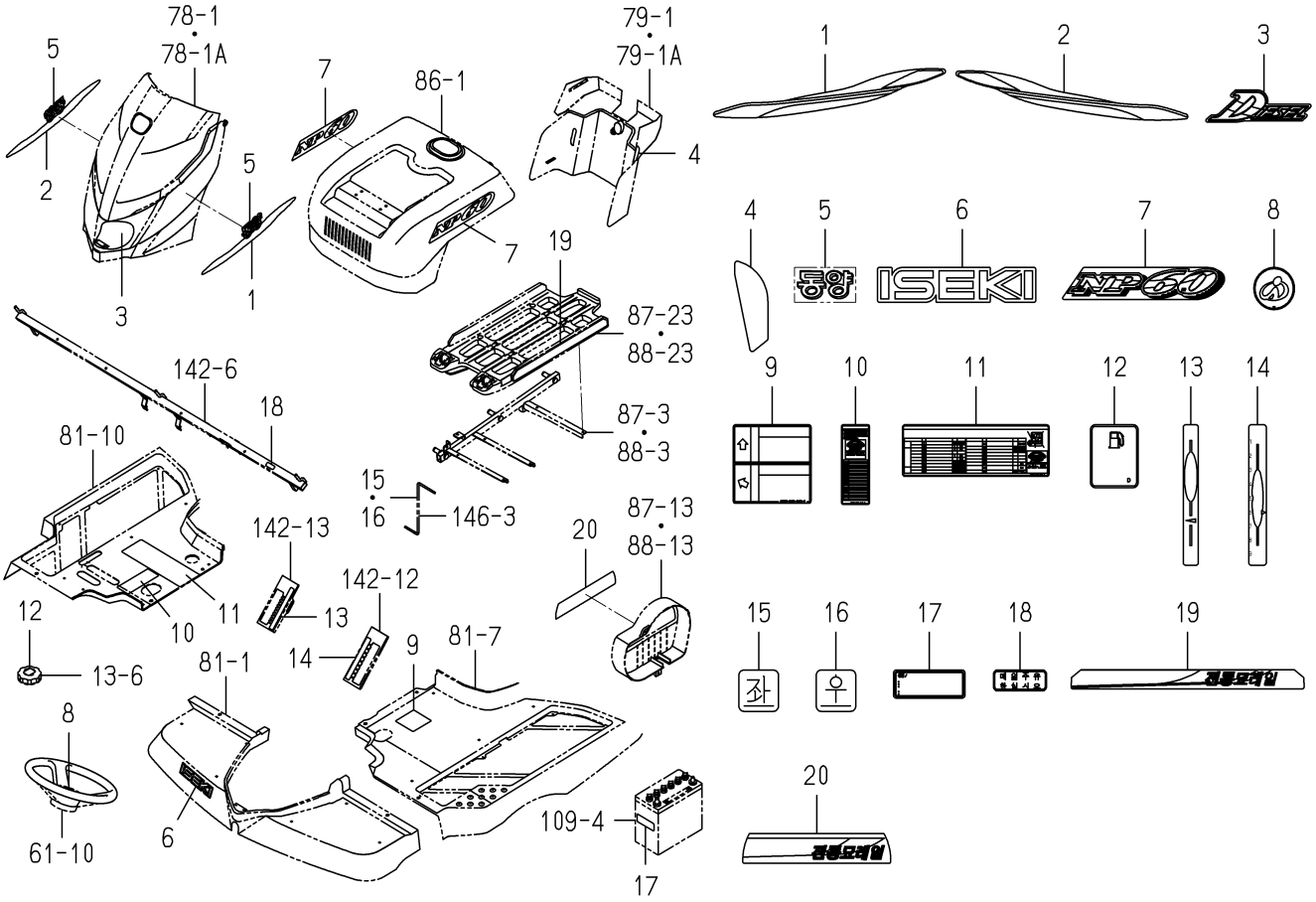

2232-912Q-0100

KEY	PART CODE	DESCRIPTION	SPC	TYPE OF MODEL NP60E16		ITC	COL	GRP	REMARKS
1	2232-912-003-00	MOLDING/HOOD/LH	*	1					
2	2232-912-004-00	MOLDING/HOOD/RH	*	1					
3	2233-912-002-00	ORNAMENT/DIESEL	*	1					
4	2232-912-027-00	LABEL/HOOD/REAR	*	1					
5	2232-912-054-00	ORNAMENT/TONGYANG/NP	*	2					
6	1716-901-016-00	ORNAMENT/ISEKI	*	1					
7	2232-912-006-00	ORNAMENT/NP60	*	2					
8	2232-912-021-10	ORNAMENT/STEERING	*	1					
9	2232-912-046-00	LABEL/OILING/NP/E16	*	1					
10	2232-912-058-00	LABEL/ERROR VIEW/NP/	*	1					
11	2232-912-059-00	LABEL/CONTROLLER SET	*	1					
12	2213-916-005-00	LABEL/DIESELFUEL/K	*	1					
13	2232-912-047-00	LABEL/SEEDLING PICKI	*	1					
14	2232-912-048-00	LABEL/DEPTH/E16	*	1					
15	2190-916-007-00	LABEL/LEFT/E16	*	1					
16	2190-916-008-00	LABEL/RIGHT/E16	*	1					
17	2186-916-035-10	LABEL/BATTERY/K	*	1					
18	2186-916-019-10	LABEL/OIL/K	*	1					
19	2232-912-037-00	ORNAMENT/NAERAIL/1/E	*	1					
20	2232-912-038-00	ORNAMENT/NAERAIL/2/E	*	1					

FIG.166 LABEL(PLANTING INTERVAL&FEED)

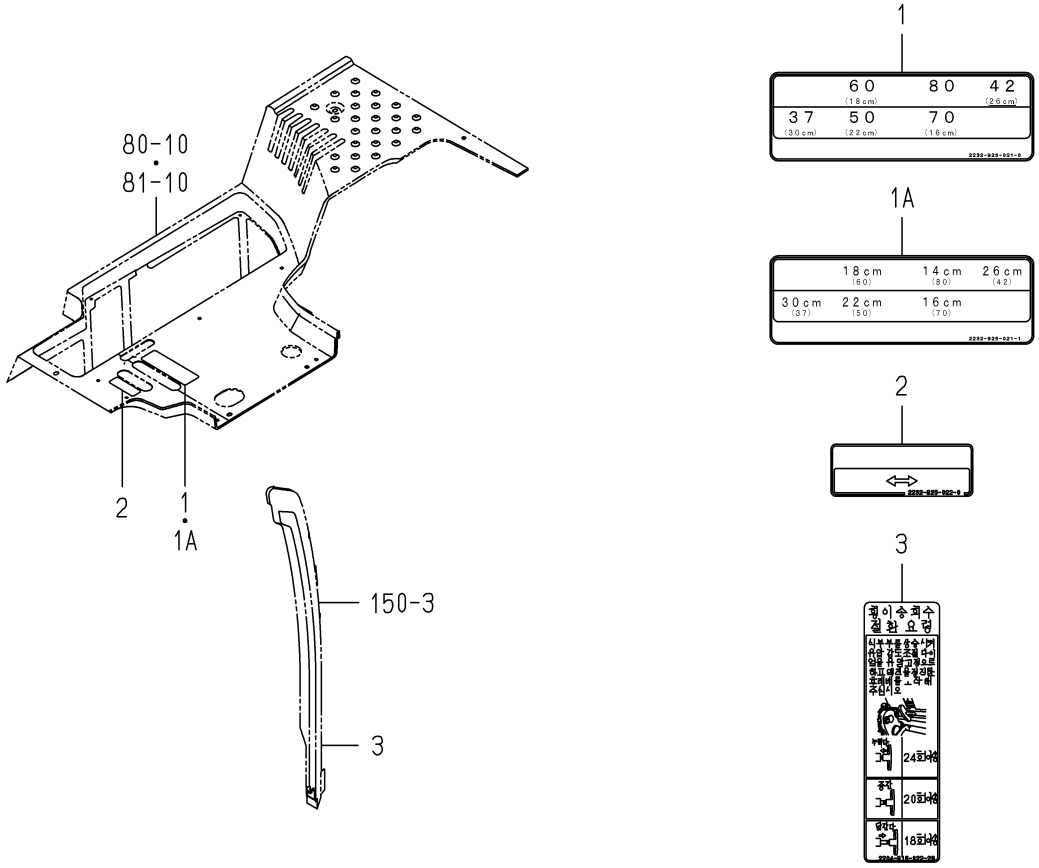

2232-925G-0100

KEY	PART CODE	DESCRIPTION	SPC	TYPE OF MODEL NP60E16		ITC	COL	GRP	REMARKS
1	2232-925-021-00	LABEL/PLANT INTERVAL	*	1 -60					
1A	2232-925-021-10	LABEL/PLANT INTERVAL	*	1 61-		1			
2	2232-925-022-00	LABEL/PLANT INTERVAL	*	1					
3	2204-916-022-20	LABEL/SLIDER/LEVER/K	*	1					

FIG.167 LABEL(CAUTION,CONTROL) (F TYPE EXCEPT F)

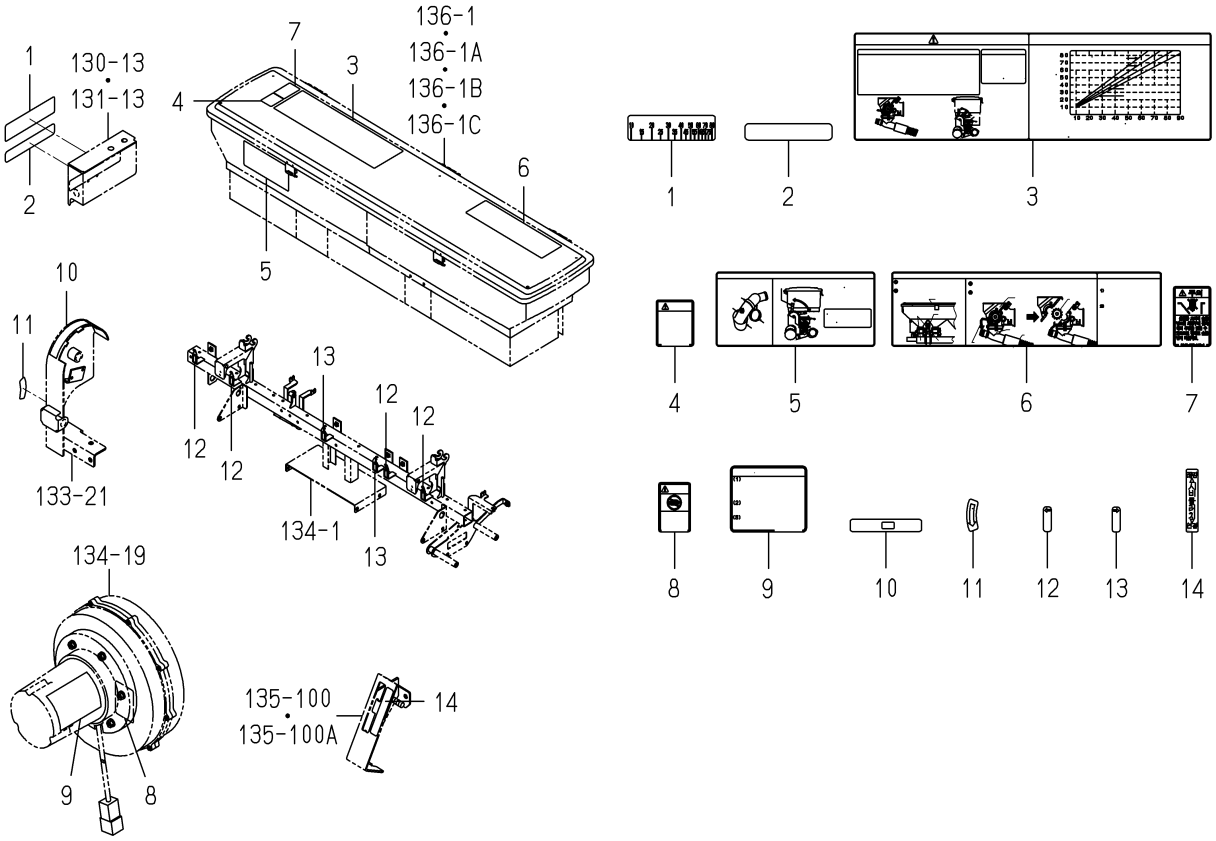

2232-926D-0100

KEY	PART CODE	DESCRIPTION	SPC	TYPE OF MODEL NP60E16		ITC	COL	GRP	REMARKS
1	2232-926-051-00	LABEL/FERTILIZER/NP/	*	1					
2	2232-926-009-00	LABEL/A MOUNT OF FER	*	1					
3	2232-926-052-00	LABEL/CAUTION/FERTIL	*	1					
4	2232-926-053-00	LABEL/CAUTION/HOPPER	*	1					
5	2232-926-054-00	LABEL/DISCHARGE OPER	*	1					
6	2232-926-055-00	LABEL/CLEANING/CAPSU	*	1					
7	8842-905-042-00	LABEL/CAUTION/HOPPER	*	1					
8	3829-905-052-00	LABEL/CAUTION/HAND	*	1					
9	2232-926-056-00	LABEL/CAUTION/BLOWER	*	1					
10	2232-926-057-00	LABEL/DISCHARGE LEVE	*	1					
11	2232-926-011-00	LABEL/HANDLE	*	1					
12	2232-926-058-00	LABEL/CLUTCH/LH/E16	*	4					
13	2232-926-059-00	LABEL/CLUTCH/RH/E16	*	2					
14	8844-906-006-00	LABEL/TOTALCLUTCH/K	*	1					

FIG.168 ORNAMENT&LABEL(CAUTION,CONTROL) (RF TYPE)

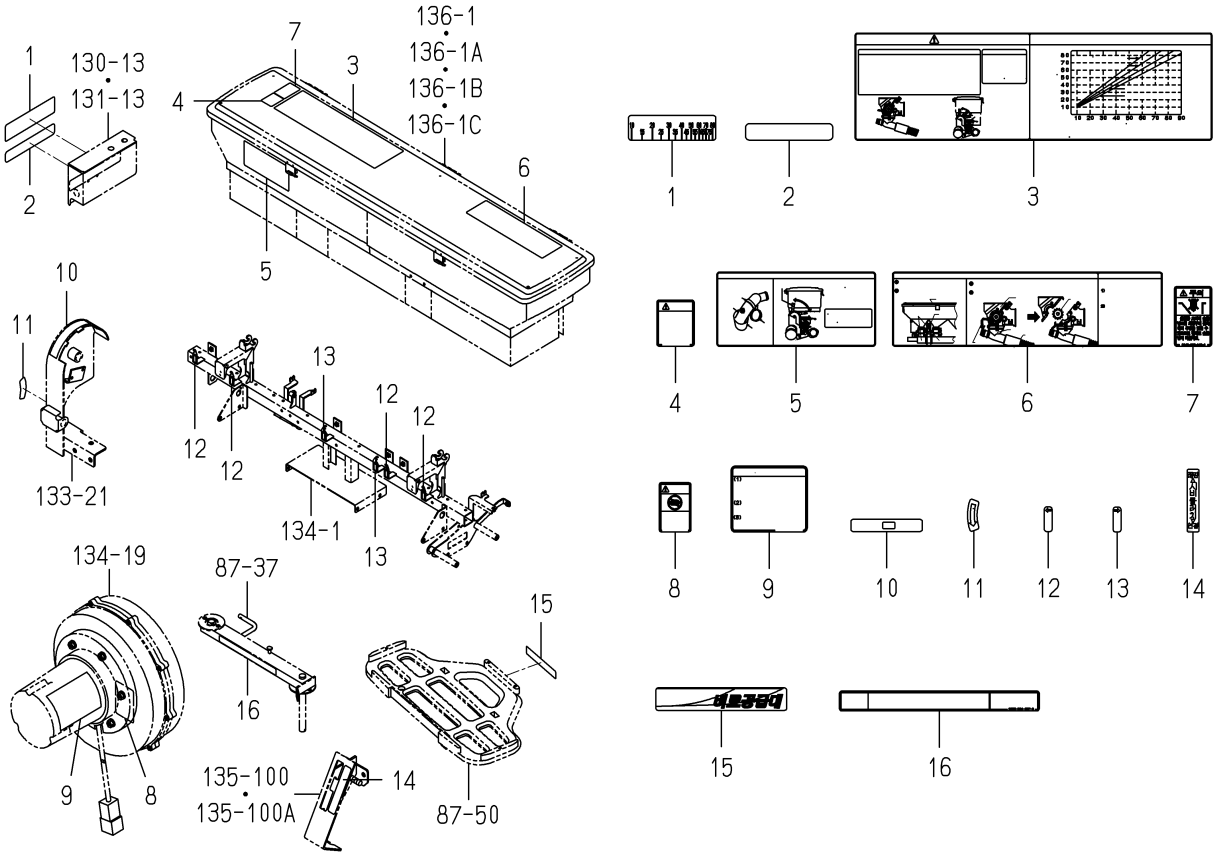

2232-926H-0100

KEY	PART CODE	DESCRIPTION	SPC	TYPE OF MODEL NP60E16		ITC	COL	GRP	REMARKS
1	2232-926-051-00	LABEL/FERTILIZER/NP/	*	1					
2	2232-926-009-00	LABEL/A MOUNT OF FER	*	1					
3	2232-926-052-00	LABEL/CAUTION/FERTIL	*	1					
4	2232-926-053-00	LABEL/CAUTION/HOPPER	*	1					
5	2232-926-054-00	LABEL/DISCHARGE OPER	*	1					
6	2232-926-055-00	LABEL/CLEANING/CAPSU	*	1					
7	8842-905-042-00	LABEL/CAUTION/HOPPER	*	1					
8	3829-905-052-00	LABEL/CAUTION/HAND	*	1					
9	2232-926-056-00	LABEL/CAUTION/BLOWER	*	1					
10	2232-926-057-00	LABEL/DISCHARGE LEVE	*	1					
11	2232-926-011-00	LABEL/HANDLE	*	1					
12	2232-926-058-00	LABEL/CLUTCH/LH/E16	*	4					
13	2232-926-059-00	LABEL/CLUTCH/RH/E16	*	2					
14	8844-906-006-00	LABEL/TOTALCLUTCH/K	*	1					
15	2232-912-039-00	ORNAMENT/ARM/E16	*	1					
16	2232-901-037-00	LABEL/CAUTION/FERTIL	*	1					

FIG.169 BRUSH&HANDLE(SEND OUT)SYSTEM (F TYPE)

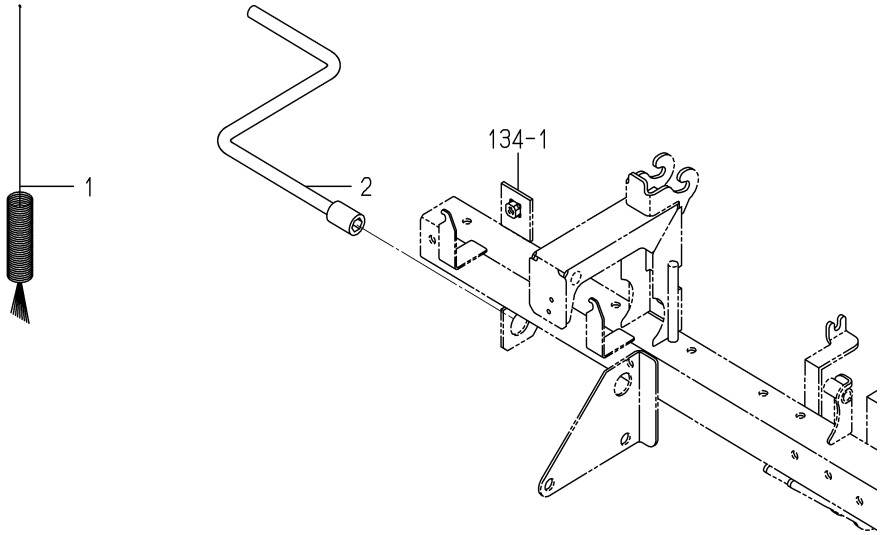

2232-955A-0100

KEY	PART CODE	DESCRIPTION	SPC	TYPE OF MODEL NP60E16		ITC	COL	GRP	REMARKS
1	8842-919-002-10	BRUSH	*	1					
2	2232-655-500-10	HANDLE/DELIVERY COMP	*	1					

FIG.170 ACCESSORY(FORK&GREASE)SYSTEM (G TYPE)

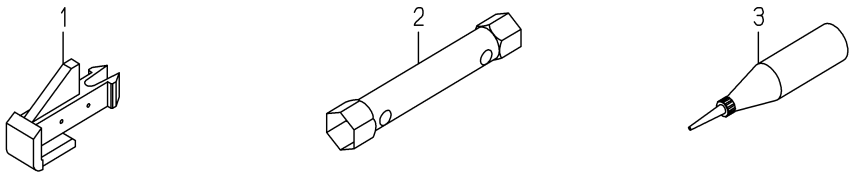

2232-971I-0100

KEY	PART CODE	DESCRIPTION	SPC	TYPE OF MODEL NP60E16		ITC	COL	GRP	REMARKS
1	2204-738-080-10	PIECE/FORK/PK	*	12					
2	2162-940-001-00	WRENCH,PLUG	*	1					
3	8849-001-200-00	GREASE,PLANTING/300G	*	1					

FIG.171 ACCESSORY(FORK&GREASE)SYSTEM (D TYPE)

2232-971J-0100

KEY	PART CODE	DESCRIPTION	SPC	TYPE OF MODEL NP60E16		ITC	COL	GRP	REMARKS
1	2204-738-080-10	PIECE/FORK/PK	*	12					
2	8849-001-200-00	GREASE,PLANTING/300G	*	1					
3	2204-738-080-10	PIECE/FORK/PK	*	12					

FIG.172 COMPONENT PARTS FOR K510-021-000-20 ON Fig.17

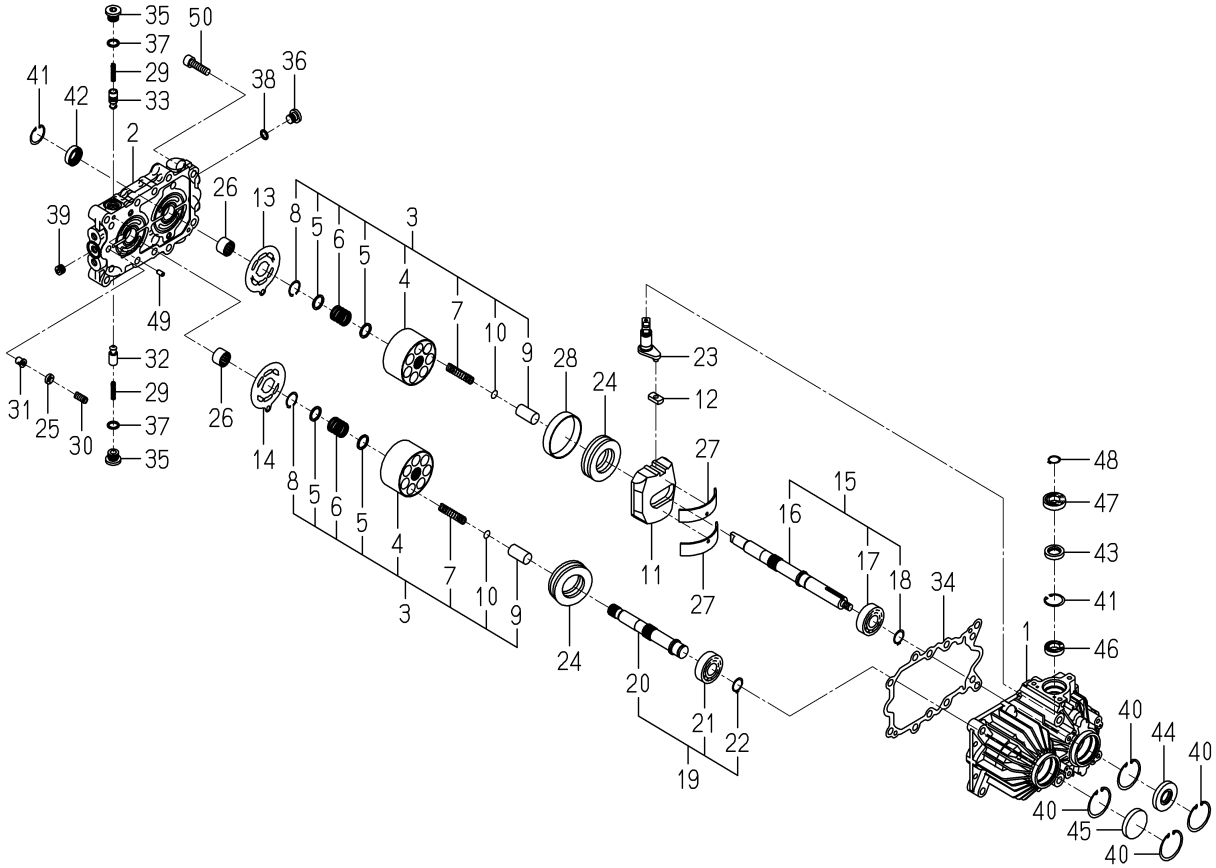

K510-021-000-2H

KEY	PART CODE	DESCRIPTION	SPC	TYPE OF MODEL NP60E16		ITC	COL	GRP	REMARKS
1	K510-017-001-00	CASE/HMS1/017	*	1					
2	K510-021-004-00	BLOCK/PORT/HMS1/021	*	1					
3	K510-021-300-00	BLOCK/CYLINDER/HMS1	*	2					
4	K510-021-301-00	BLOCK/CYLINDER/24CC	*	2					
5	K510-021-302-00	WASHER/19X24X2	*	4					
6	K510-021-303-00	SPRING/HC024	*	2					
7	K510-021-304-00	SPRING/HC051	*	14					
8	K510-021-305-00	RING/SNAP	*	2					
9	K510-021-306-00	PISTON/HMS1/021	*	14					
10	K510-021-307-00	SHIM/1.0	*	14					
11	K510-021-006-00	PLATE/SWASH/HMS1/021	*	1					
12	K510-001-007-00	METAL/SLIDE	*	1					
13	K510-021-010-00	PLATE/VALVE/PUMP	*	1					
14	K510-021-011-00	PLATE/VALVE/MOTOR	*	1					
15	K510-021-600-00	SHAFT/PUMP/021 SET	*	1					
16	K510-021-012-00	SHAFT/PUMP/HMS1/021	*	1					
17	V600-110-620-40	BEARING,RB/6204	*	1					
18	V704-140-020-00	RING,SNAP/20 C	*	1					
19	K510-021-610-00	SHAFT/MOTOR/021 SET	*	1					
20	K510-021-013-00	SHAFT/MOTOR/HMS1/021	*	1					
21	V600-110-620-40	BEARING,RB/6204	*	1					
22	V704-140-020-00	RING,SNAP/20 C	*	1					
23	K510-006-014-00	ARM/TRUNNION/HMS1/00	*	1					
24	K510-006-015-00	BEARING/THRUST	*	2					
25	K510-003-037-00	PLATE/SPRING	*	1					
26	K510-021-016-10	BEARING	*	2					
27	K510-001-017-00	BUSH/95X100X22	*	2					
28	K510-001-018-00	BUSH/68X71X14	*	1					
29	K510-001-020-00	SPRING/HC030	*	2					
30	K510-003-021-00	SPRING/HC021	*	1					

FIG.172 COMPONENT PARTS FOR K510-021-000-20 ON Fig.17

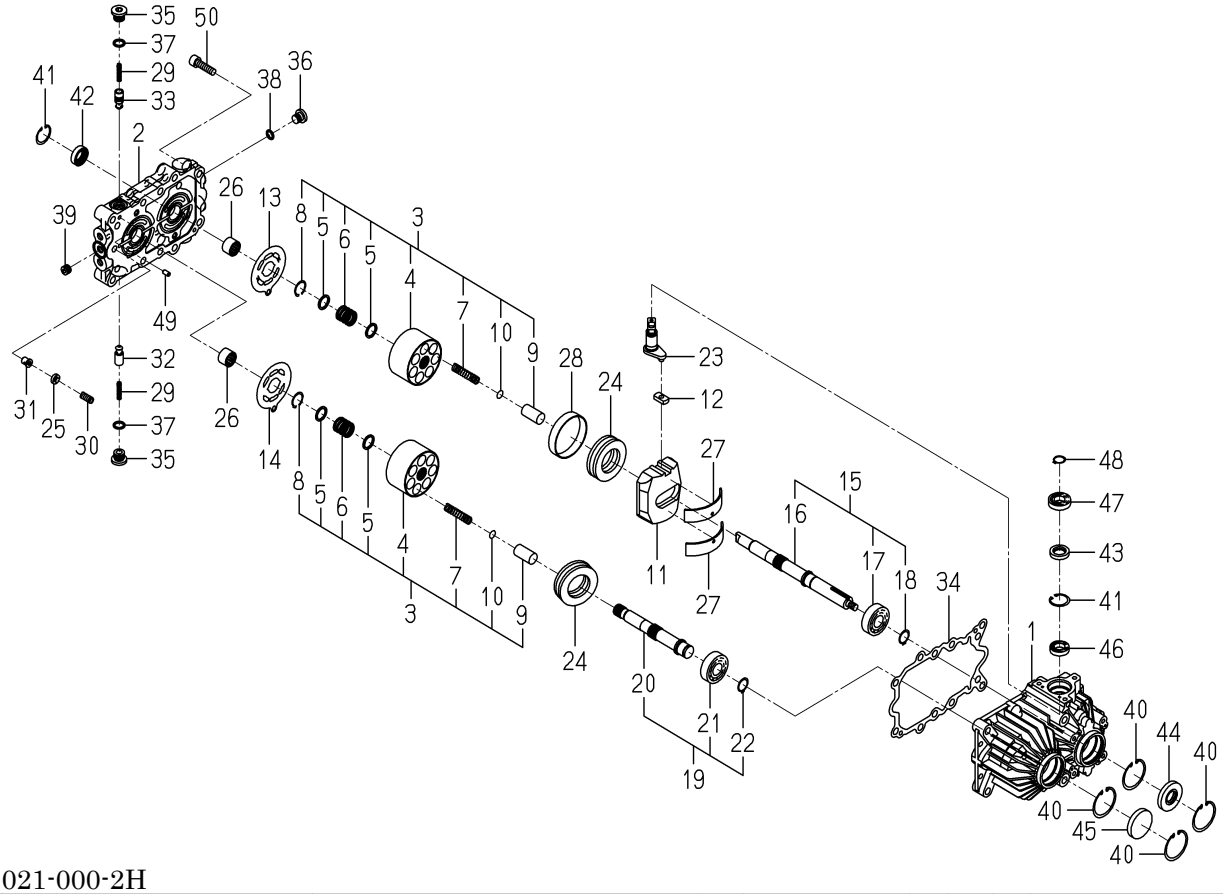

K510-021-000-2H

KEY	PART CODE	DESCRIPTION	SPC	TYPE OF MODEL NP60E16		ITC	COL	GRP	REMARKS
31	K510-003-022-00	POPPET/RELIEF	*	1					
32	K510-021-023-00	POPPET/CHECK	*	1					
33	K510-021-024-00	POPPET/CHECK/1.6	*	1					
34	K510-001-026-00	GASKET	*	1					
35	K510-001-029-00	PLUG(G3/8)	*	2					
36	K275-001-003-00	PLUG(PF1/4)	*	2					
37	V720-112-401-40	O-RING/1B,P14	*	2					
38	V720-112-401-10	O-RING/1B,P11	*	2					
39	V780-140-000-4T	PLUG/SCREW/SEAL	*	3					
40	V705-140-047-00	RING,SNAP/47 C	*	4					
41	V705-140-030-00	RING,SNAP/30 C	*	3					
42	K510-021-030-00	SEAL/OIL	*	2					
43	K510-001-031-00	SEAL/OIL	*	1					
44	V744-120-470-70	SEAL,OIL/TC20477	*	1					
45	1421-201-002-00	SEAL/47	*	1					
46	K510-017-047-00	BEARING,RB/6903	*	1					
47	K510-017-048-00	BEARING,RB/6003SS	*	1					
48	V704-140-017-00	RING,SNAP/17 C	*	1					
49	K510-001-036-00	PIN,ST	*	4					
50	V220-541-003-50	SCREW,SOCKET/M10X35	*	8					

FIG.173 COMPONENT PARTS FOR K510-022-000-00 ON Fig.18

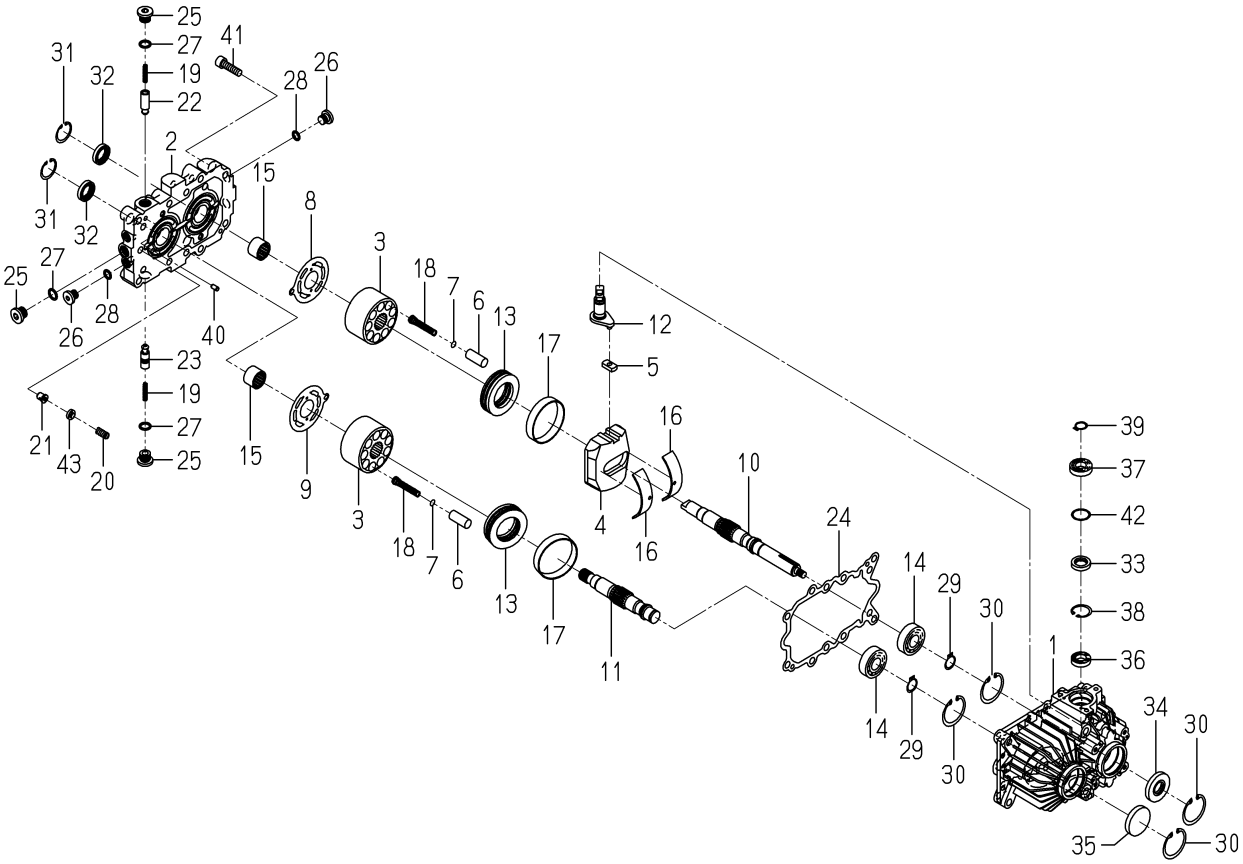

K510-022-000-0G

KEY	PART CODE	DESCRIPTION	SPC	TYPE OF MODEL NP60E16		ITC	COL	GRP	REMARKS
1	K510-022-001-00	CASE/HMS1/022	*	1					
2	K510-022-004-00	BLOCK/PORT/HMS1/022	*	1					
3	K510-019-005-10	BLOCK/CYLINDER/23CC	*	2					
4	K510-010-006-10	PLATE/SWASH	*	1					
5	K510-001-007-00	METAL/SLIDE	*	1					
6	K510-006-008-00	PISTON	*	18					
7	K510-010-009-00	SHIM/1.8	*	18					
8	K510-001-010-00	PLATE/VALVE/PUMP	*	1					
9	K510-001-011-00	PLATE/VALVE/MOTOR	*	1					
10	K510-006-012-30	SHAFT/PUMP	*	1					
11	K510-001-013-20	SHAFT/MOTOR	*	1					
12	K510-006-014-00	ARM/TRUNNION/HMS1/00	*	1					
13	K510-001-015-00	BEARING/THRUST	*	2					
14	V600-110-620-40	BEARING,RB/6204	*	2					
15	K510-001-016-00	NEEDLE	*	2					
16	K510-001-017-00	BUSH/95X100X22	*	2					
17	K510-001-018-00	BUSH/68X71X14	*	2					
18	K510-001-019-00	SPRING/HC053	*	18					
19	K510-001-020-00	SPRING/HC030	*	2					
20	K510-003-021-00	SPRING/HC021	*	1					
21	K510-003-022-00	POPPET/RELIEF	*	1					
22	K500-001-023-00	POPPET/CHECK	*	1					
23	K510-001-024-00	POPPET(CHECK/1.6)	*	1					
24	K510-001-026-00	GASKET	*	1					
25	K510-001-029-00	PLUG(G3/8)	*	3					
26	K275-001-003-00	PLUG(PF1/4)	*	4					
27	V720-112-401-40	O-RING/1B,P14	*	3					
28	V720-112-401-10	O-RING/1B,P11	*	4					
29	V704-140-020-00	RING,SNAP/20 C	*	2					
30	V705-140-047-00	RING,SNAP/47 C	*	4					

FIG.173 COMPONENT PARTS FOR K510-022-000-00 ON Fig.18

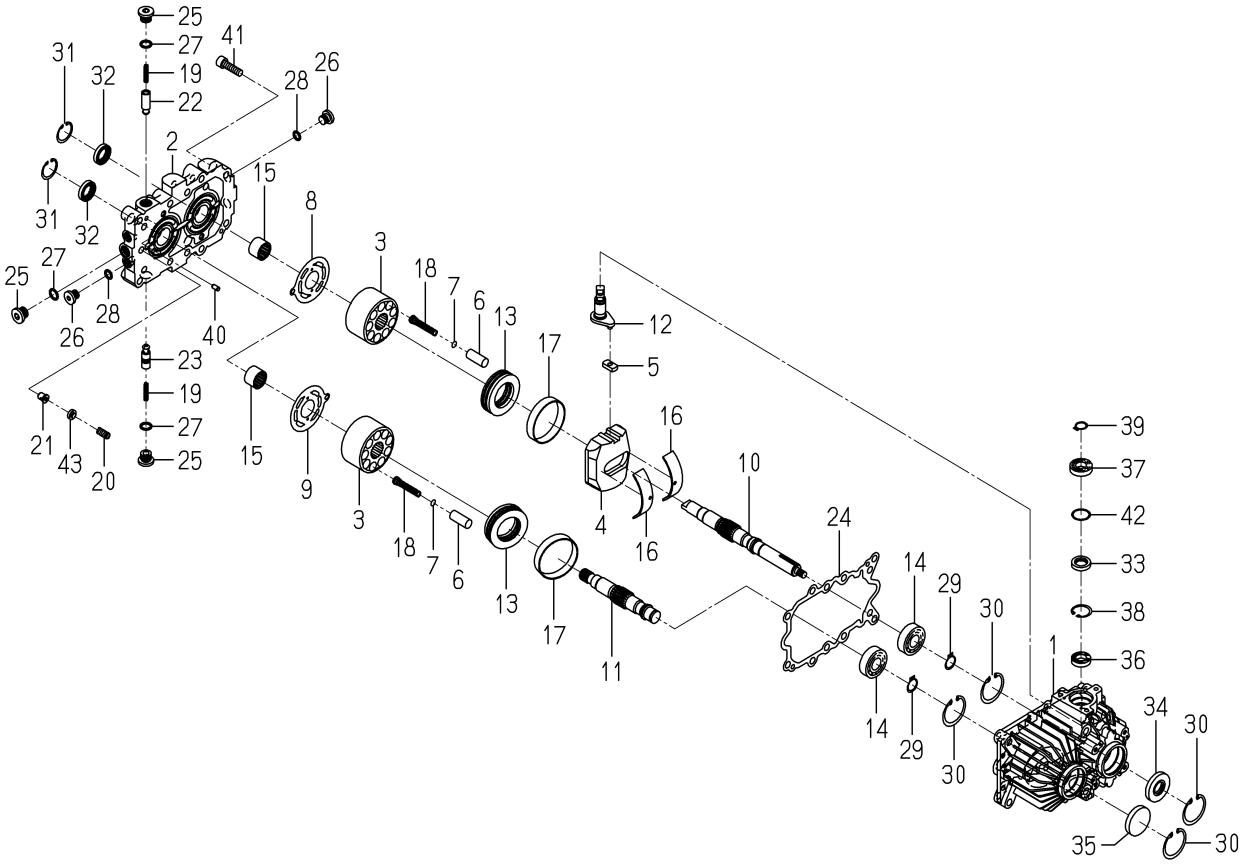

K510-022-000-0G

KEY	PART CODE	DESCRIPTION	SPC	TYPE OF MODEL NP60E16		ITC	COL	GRP	REMARKS
31	V705-140-032-00	RING,SNAP/32 C	*	2					
32	K510-001-039-00	OIL SEAL	*	2					
33	K510-001-031-00	SEAL/OIL	*	1					
34	V744-120-470-70	SEAL,OIL/TC20477	*	1					
35	1421-201-002-00	SEAL/47	*	1					
36	K510-017-047-00	BEARING,RB/6903	*	1					
37	K510-017-048-00	BEARING,RB/6003SS	*	1					
38	V705-140-030-00	RING,SNAP/30 C	*	1					
39	V704-140-017-00	RING,SNAP/17 C	*	1					
40	K510-001-036-00	PIN,ST	*	4					
41	V220-541-003-50	SCREW,SOCKET/M10X35	*	8					
42	K510-001-034-00	WASHER/25X30X1	*	1					
43	K510-003-037-00	PLATE/SPRING	*	1					

FIG.174 COMPONENT PARTS FOR 2204-738-450-30 ON Fig.148

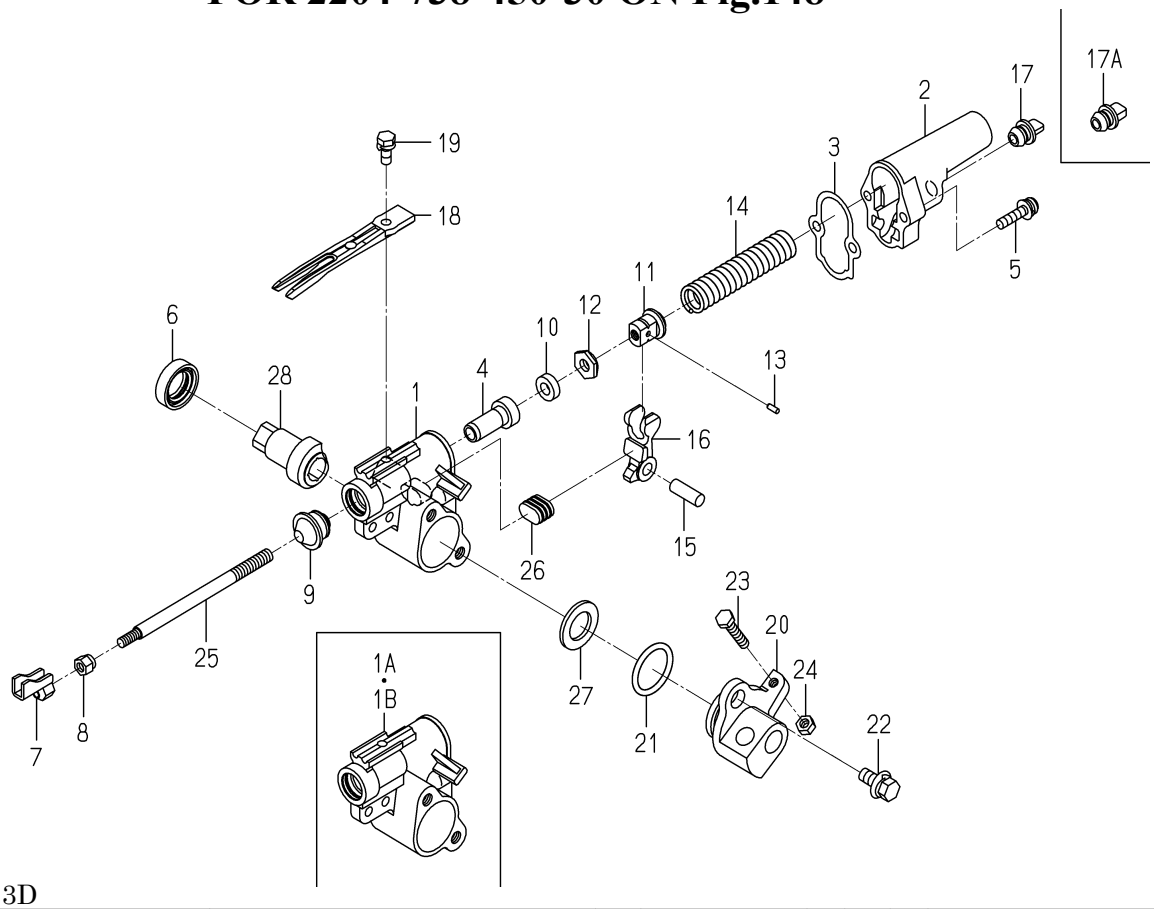

2204-738-450-3D

KEY	PART CODE	DESCRIPTION	SPC	TYPE OF MODEL NP60E16		ITC	COL	GRP	REMARKS
1	2213-738-301-20	ARM,PLANTING/E/LH	*	6 -60			4L		
1A	2213-738-301-30	ARM,PLANTING/E/LH	*	6 -680		1	4L		
1B	2213-738-301-40	ARM,PLANTING/LH/E	*	6 681-		1	4L		
2	2204-738-412-10	COVER/PLANTING/PZ/E	*	6					
3	2142-736-235-00	GASKET	*	6					
4	2204-738-304-20	BUSH/08X18X36	*	6					
5	V120-366-003-00	SCREW,SP/M6X30	*	12					
6	2161-738-222-00	SEAL,OIL	*	6					
7	2204-738-240-20	FROK/PLANT COMP	*	6					
8	2204-738-004-00	LOCKNUT	*	6					
9	2232-738-304-00	PLANTINGSEAL	*	6					
10	2703-501-006-00	CUSHION	*	6					
11	2204-738-414-10	PUSHINGOUTNUT/E	*	6					
12	2703-501-008-00	NUT,LOCK PUSH OUT	*	6					
13	V523-100-300-80	PIN,ST,B/3X8	*	6					
14	2204-738-413-10	SPRING/HC086	*	6					
15	2142-736-239-00	PIN,ARM PUSH-OUT	*	6					
16	2204-738-318-10	ARM/PUSH-OUT/PZ	*	6					
17	2204-738-001-00	CAP/YELLOW/10/KNOB	*	6 -60					
17A	2204-738-001-10	CAP/YELLOW/10/KNOB	*	6 61-		1			
18	2186-740-033-20	FINGER/14/G	*	6					
19	2204-738-059-00	BOLT/M6X16	*	6					
20	2204-738-312-00	HUB/PLANTING ARM	*	6			4L		
21	V720-103-502-80	O-RING/1A,P28	*	6					
22	2186-738-059-00	BOLT/M8X20/SP/S	*	12					
23	V200-700-603-00	BOLT,SUS/M6X30	*	6					
24	V301-700-006-00	NUT,SUS/M6	*	6					
25	2204-738-005-00	SHAFT/FORK/PLANTING/	*	6					
26	2204-738-319-00	CUSHION/ARM/PZ	*	6					
27	2204-738-325-00	WASHER/M18	*	6					

FIG.174 COMPONENT PARTS FOR 2204-738-450-30 ON Fig.148

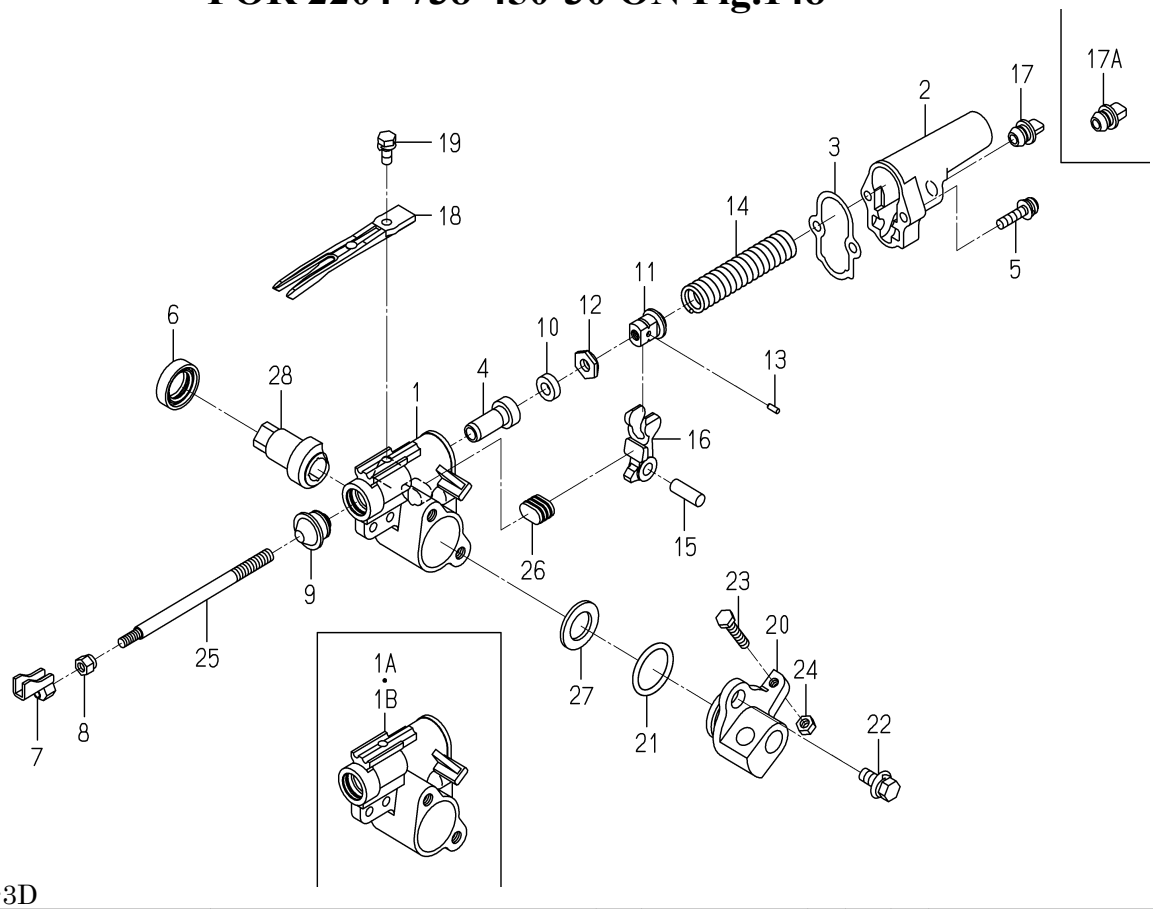

2204-738-450-3D

KEY	PART CODE	DESCRIPTION	SPC	TYPE OF MODEL NP60E16		ITC	COL	GRP	REMARKS
28	2204-738-307-00	CAM/PUSHED OUT/LH	*	6					

FIG.175 COMPONENT PARTS FOR 2204-739-450-30 ON Fig.149

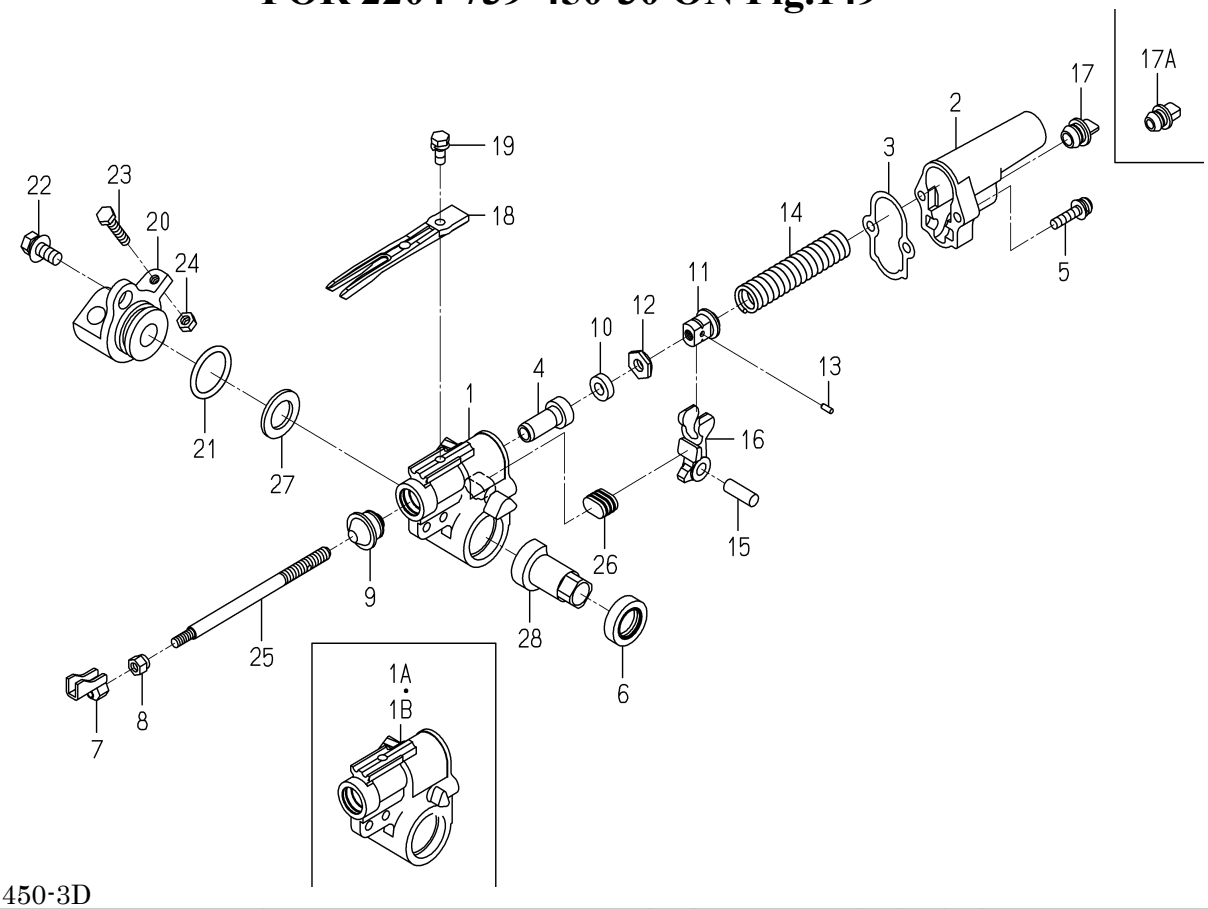

2204-739-450-3D

KEY	PART CODE	DESCRIPTION	SPC	TYPE OF MODEL NP60E16		ITC	COL	GRP	REMARKS
1	2213-739-301-20	ARM,PLANTING/E/RH	*	6 -60			4L		
1A	2213-739-301-30	ARM,PLANTING/E/RH	*	6 -680		1	4L		
1B	2213-739-301-40	ARM,PLANTING/RH/E	*	6 681-		1	4L		
2	2204-738-412-10	COVER/PLANTING/PZ/E	*	6					
3	2142-736-235-00	GASKET	*	6					
4	2204-738-304-20	BUSH/08X18X36	*	6					
5	V120-366-003-00	SCREW,SP/M6X30	*	12					
6	2161-738-222-00	SEAL,OIL	*	6					
7	2204-738-240-20	FROK/PLANT COMP	*	6					
8	2204-738-004-00	LOCKNUT	*	6					
9	2232-738-304-00	PLANTINGSEAL	*	6					
10	2703-501-006-00	CUSHION	*	6					
11	2204-738-414-10	PUSHINGOUTNUT/E	*	6					
12	2703-501-008-00	NUT,LOCK PUSH OUT	*	6					
13	V523-100-300-80	PIN,ST,B/3X8	*	6					
14	2204-738-413-10	SPRING/HC086	*	6					
15	2142-736-239-00	PIN,ARM PUSH-OUT	*	6					
16	2204-738-318-10	ARM/PUSH-OUT/PZ	*	6					
17	2204-738-001-00	CAP/YELLOW/10/KNOB	*	6 -60					
17A	2204-738-001-10	CAP/YELLOW/10/KNOB	*	6 61-		1			
18	2186-740-033-20	FINGER/14/G	*	6					
19	2204-738-059-00	BOLT/M6X16	*	6					
20	2204-738-312-00	HUB/PLANTING ARM	*	6			4L		
21	V720-103-502-80	O-RING/1A,P28	*	6					
22	2186-738-059-00	BOLT/M8X20/SP/S	*	12					
23	V200-700-603-00	BOLT,SUS/M6X30	*	6					
24	V301-700-006-00	NUT,SUS/M6	*	6					
25	2204-738-005-00	SHAFT/FORK/PLANTING/	*	6					
26	2204-738-319-00	CUSHION/ARM/PZ	*	6					
27	2204-738-325-00	WASHER/M18	*	6					

FIG.175 COMPONENT PARTS FOR 2204-739-450-30 ON Fig.149

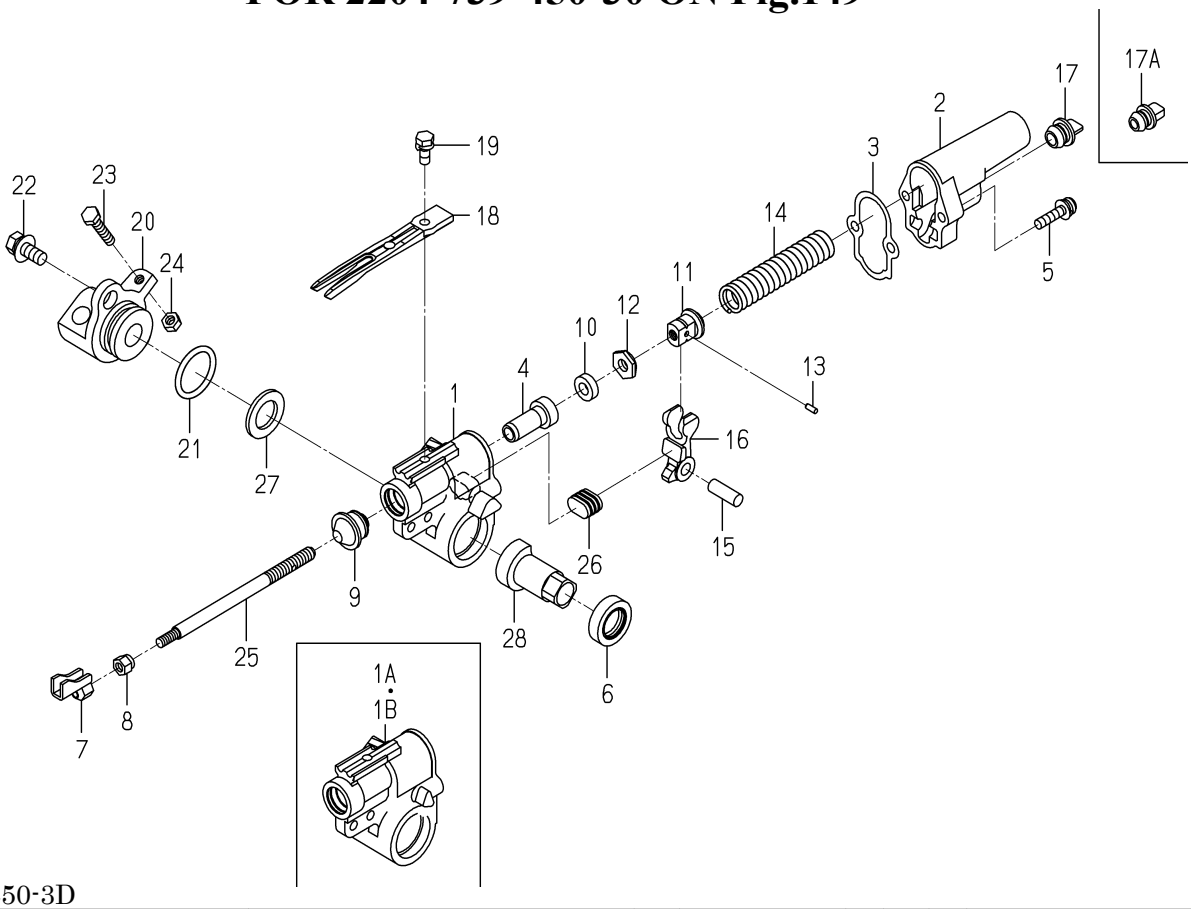

2204-739-450-3D

KEY	PART CODE	DESCRIPTION	SPC	TYPE OF MODEL NP60E16		ITC	COL	GRP	REMARKS
28	2204-739-307-00	CAM/PUSHED OUT/RH	*	6					

FIG.176 COMPONENT PARTS FOR 2232-207-200-30 ON Fig.30

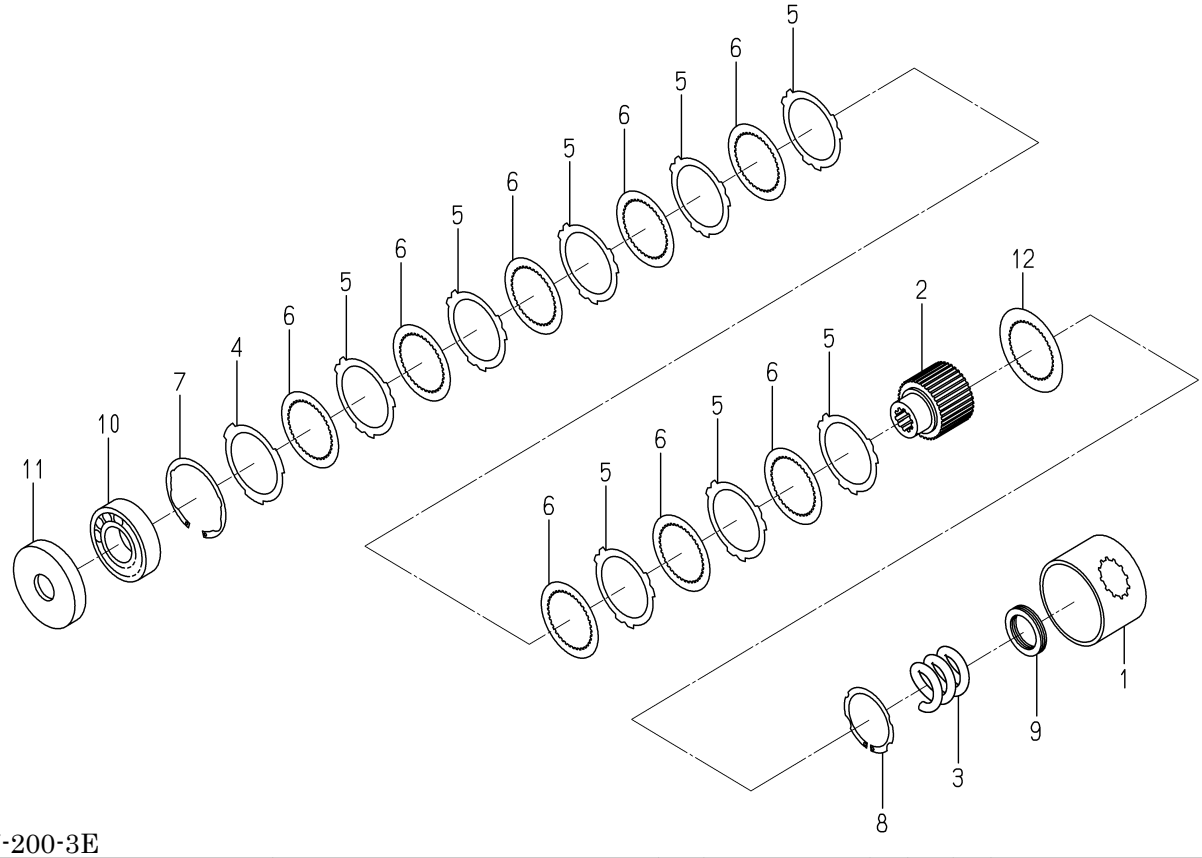

2232-207-200-3E

KEY	PART CODE	DESCRIPTION	SPC	TYPE OF MODEL NP60E16		ITC	COL	GRP	REMARKS
1	2232-207-201-00	CASE	*	2					
2	2232-207-202-00	SPLINEBOSS	*	2					
3	2232-207-203-00	SPRING	*	2					
4	2232-207-204-00	PLATE/1.6	*	2					
5	2232-207-205-00	PLATE/0.8	*	16					
6	2232-207-206-00	DISC	*	16					
7	2232-207-207-00	SNAPRING/HOLE	*	2					
8	2232-207-208-00	SNAPRING/SHAFT	*	2					
9	2232-207-209-00	THRUSTCOLLAR	*	2					
10	2232-207-211-00	BEARINGBALL	*	2					
11	2232-207-212-00	BEARINGCOVER	*	2					
12	2232-207-213-00	PLATESPLINE1.6	*	2					

FIG.177 COMPONENT PARTS FOR 2232-686-250-90 ON Fig.136

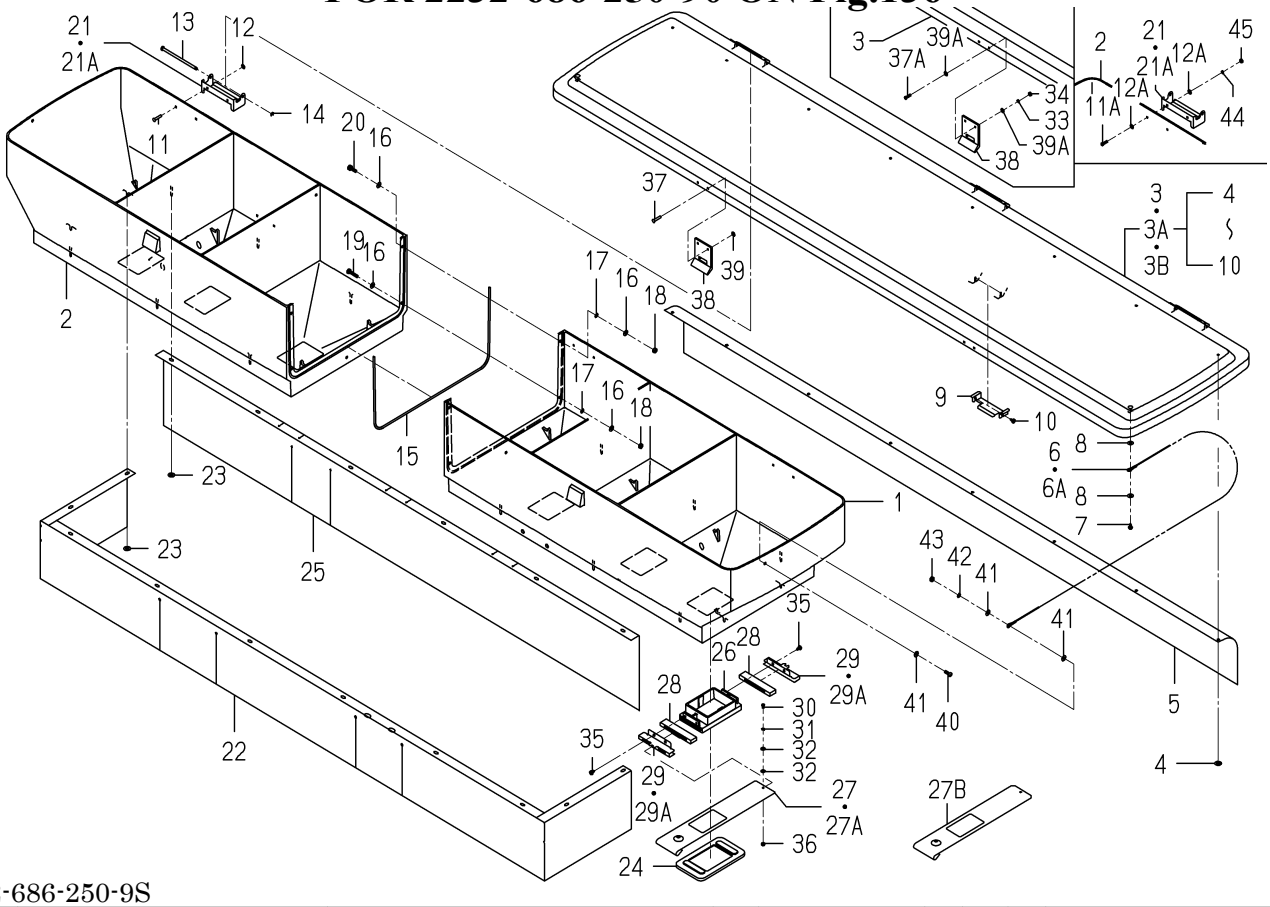

2232-686-250-9S

KEY	PART CODE	DESCRIPTION	SPC	TYPE OF MODEL NP60E16		ITC	COL	GRP	REMARKS
1	2232-686-001-10	HOPPER/3/LH/6	*	1 -578					
2	2232-686-002-10	HOPPER/3/RH/6	*	1 -578					
3	2232-686-260-10	COVER/HOPPER/6 ASSY	*	1 -60					
3A	2232-686-260-20	COVER/HOPPER/6 ASSY	*	1 -141		1			
3B	2232-686-260-40	COVER/HOPPER/6 ASSY	*	1 -630		1			
4	2151-250-003-00	NUT,SPEED/4	*	8 -578					
5	2232-686-011-10	SHEET/HOPPER/6	*	1 -522					
6	8841-718-002-00	CABLE,HOPPER	*	2 -60					
6A	8841-716-008-10	CABLE,HOPPER/F1	*	2 -141					
7	8841-716-009-00	PIN/+	*	2 -578					
8	V411-700-004-00	WASHER,PL/M4	*	4 -578					
9	2232-686-024-00	HOOK/BRUSH	*	1 -578					
10	8841-716-009-00	PIN/+	*	2 -578					
11	8836-730-215-00	RIVET/BLIND/0	*	6 -60					
11A	V111-703-001-20	SCREW/M3X12	*	6 -578					
12	V411-700-003-00	WASHER,PL/M3	*	6 -60					
12A	V411-700-003-00	WASHER,PL/M3	*	12 -578					
13	2232-686-016-00	PIN/04X86	*	3 -578					
14	2145-770-214-00	RING, SNAP	*	3 -578					
15	2232-686-009-10	PACKING/HOPPER	*	1 -578					
16	V411-700-004-00	WASHER,PL/M4	*	10 -578					
17	V401-700-004-00	WASHER,SP/M4	*	5 -578					
18	V301-700-004-00	NUT,SUS/M4	*	5 -578					
19	8841-716-011-00	BOLT/M4X20/SUS	*	2 -578					
20	8836-730-216-00	BOLT/M4X14/SUS	*	3 -578					
21	2232-686-004-10	HING/HOPPER	*	3 -522					
21A	2232-686-004-20	HING/HOPPER	*	3 -578		1			
22	2232-686-013-20	SHEET/HOPPER/6/LOWER	*	1 -578					
23	2151-250-003-00	NUT,SPEED/4	*	16 -578					
24	2232-686-012-10	GASKET/HOPPER	*	6 -578					

FIG.177 COMPONENT PARTS FOR 2232-686-250-90 ON Fig.136

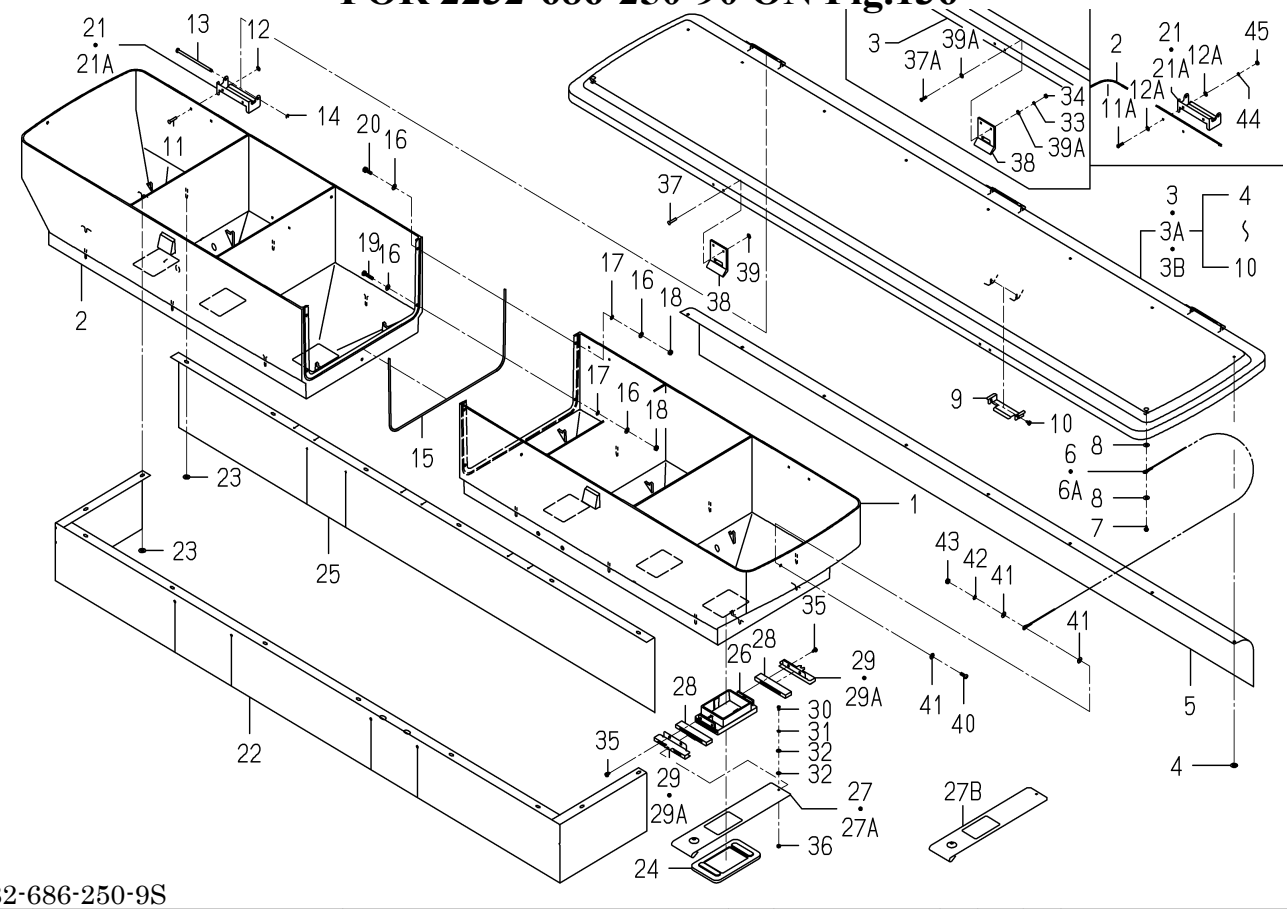

2232-686-250-9S

KEY	PART CODE	DESCRIPTION	SPC	TYPE OF MODEL NP60E16		ITC	COL	GRP	REMARKS
25	2232-686-017-20	SHEET/HOPPER/6/REAR	*	1 -578					
26	2232-686-019-20	HOPPERGUIDE	*	6 -578					
27	2232-686-020-30	SHUTTER	*	6 -10					
27A	2232-686-020-40	SHUTTER	*	6 -60		1			
27B	2232-686-020-60	SHUTTER	*	6 -578		1			
28	2232-686-021-30	PACKING/SHUTTER	*	12 -578					
29	2232-686-023-10	PLATE/SHUTTERCOVER	*	12 -562					
29A	2232-686-023-20	PLATE/SHUTTERCOVER	*	12 -578		1			
30	V111-703-000-60	SCREW/M3X6	*	6 -578					
31	V401-700-003-00	WASHER,SP/M3	*	6 -578					
32	V411-700-003-00	WASHER,PL/M3	*	12 -578					
33	V401-700-003-00	WASHER,SP/M3	*	4 -578					
34	V301-700-003-00	NUT,SUS/M3	*	4 -578					
35	2150-761-005-00	SCREW/TAPPING	*	24 -578					
36	V301-700-003-00	NUT,SUS/M3	*	6 -578					
37	8836-730-215-00	RIVET/BLIND/0	*	4 -60					
37A	V111-703-001-20	SCREW/M3X12	*	4 -578					
38	2232-686-010-00	HOPPER HOOK	*	2 -142					
39	V411-700-003-00	WASHER,PL/M3	*	4 -60					
39A	V411-700-003-00	WASHER,PL/M3	*	8 -578					
40	V111-164-001-20	SCREW/M4X12	*	2 -578					
41	V411-700-004-00	WASHER,PL/M4	*	6 -578					
42	V401-700-004-00	WASHER,SP/M4	*	2 -578					
43	V301-700-004-00	NUT,SUS/M4	*	2 -578					
44	V401-700-003-00	WASHER,SP/M3	*	6 -578					
45	V301-700-003-00	NUT,SUS/M3	*	6 -578					

FIG.178 COMPONENT PARTS FOR 2232-686-270-50 ON Fig.136

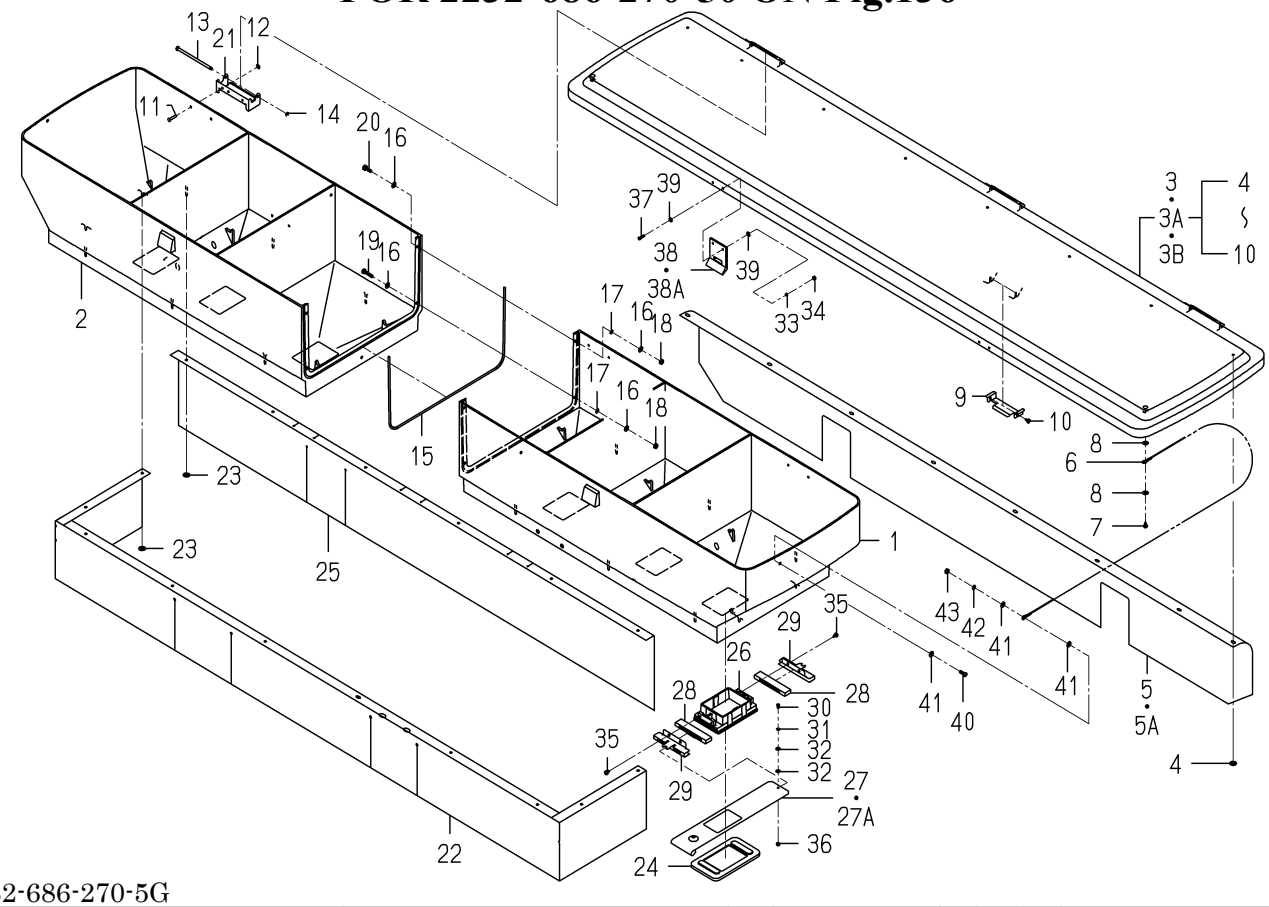

2232-686-270-5G

KEY	PART CODE	DESCRIPTION	SPC	TYPE OF MODEL NP60E16		ITC	COL	GRP	REMARKS
1	2232-686-001-10	HOPPER/3/LH/6	*	1 579-					
2	2232-686-002-10	HOPPER/3/RH/6	*	1 579-					
3	2232-686-260-40	COVER/HOPPER/6 ASSY	*	1 -630					
3A	2232-686-260-50	COVER/HOPPER/6 ASSY	*	1 -632		1			
3B	2232-686-260-60	COVER/HOPPER/6 ASSY	*	1 633-		1			
4	2151-250-003-00	NUT,SPEED/4	*	8 579-					
5	2232-686-011-20	SHEET/HOPPER/6	*	1 -632					
5A	2232-686-011-30	SHEET/HOPPER/6	*	1 633-		1			
6	2232-687-007-00	CABLE/HOPPER/NP/F	*	2 579-					
7	8841-716-009-00	PIN/+	*	2 579-					
8	V411-700-004-00	WASHER,PL/M4	*	4 579-					
9	2232-686-024-00	HOOK/BRUSH	*	1 579-					
10	8841-716-009-00	PIN/+	*	2 579-					
11	8836-730-215-00	RIVET/BLIND/0	*	6 579-					
12	V411-700-003-00	WASHER,PL/M3	*	6 579-					
13	2232-686-016-00	PIN/04X86	*	3 579-					
14	2145-770-214-00	RING, SNAP	*	3 579-					
15	2232-686-009-10	PACKING/HOPPER	*	1 579-					
16	V411-700-004-00	WASHER,PL/M4	*	10 579-					
17	V401-700-004-00	WASHER,SP/M4	*	5 579-					
18	V301-700-004-00	NUT,SUS/M4	*	5 579-					
19	8841-716-011-00	BOLT/M4X20/SUS	*	2 579-					
20	8836-730-216-00	BOLT/M4X14/SUS	*	3 579-					
21	2232-686-004-20	HING/HOPPER	*	3 579-					
22	2232-686-013-20	SHEET/HOPPER/6/LOWER	*	1 579-					
23	2151-250-003-00	NUT,SPEED/4	*	16 579-					
24	2232-686-012-10	GASKET/HOPPER	*	6 579-					
25	2232-686-017-20	SHEET/HOPPER/6/REAR	*	1 579-					
26	2232-686-019-20	HOPPERGUIDE	*	6 579-					
27	2232-686-020-60	SHUTTER	*	6 -1187					

FIG.178 COMPONENT PARTS FOR 2232-686-270-50 ON Fig.136

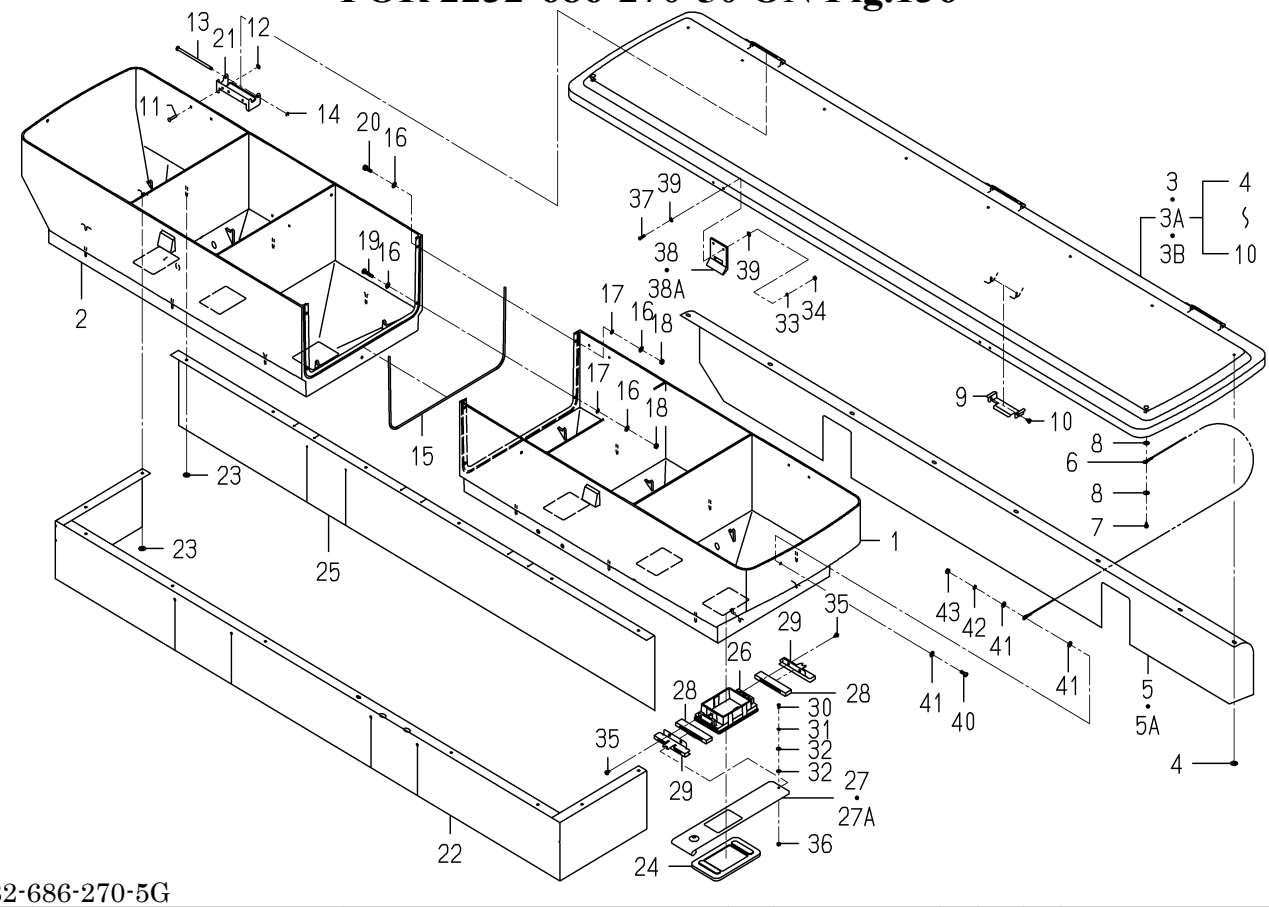

2232-686-270-5G

KEY	PART CODE	DESCRIPTION	SPC	TYPE OF MODEL NP60E16		ITC	COL	GRP	REMARKS
27A	2232-686-020-70	SHUTTER	*	6 1188-		1			
28	2232-686-021-30	PACKING/SHUTTER	*	12 579-					
29	2232-686-023-20	PLATE/SHUTTERCOVER	*	12 579-		1			
30	V111-703-000-60	SCREW/M3X6	*	6 579-					
31	V401-700-003-00	WASHER,SP/M3	*	6 579-					
32	V411-700-003-00	WASHER,PL/M3	*	12 579-					
33	V401-700-003-00	WASHER,SP/M3	*	4 579-					
34	V301-700-003-00	NUT,SUS/M3	*	4 579-					
35	2150-761-005-00	SCREW/TAPPING	*	24 579-					
36	V301-700-003-00	NUT,SUS/M3	*	6 579-					
37	V111-703-001-20	SCREW/M3X12	*	4 579-					
38	2232-686-010-10	HOOK,HOPPER	*	2 -630					
38A	2232-686-010-20	HOPPERHOOK	*	2 631-		1			
39	V411-700-003-00	WASHER,PL/M3	*	8 579-					
40	V111-164-001-20	SCREW/M4X12	*	2 579-					
41	V411-700-004-00	WASHER,PL/M4	*	6 579-					
42	V401-700-004-00	WASHER,SP/M4	*	2 579-					
43	V301-700-004-00	NUT,SUS/M4	*	2 579-					

FIG.179 COMPONENT PARTS
FOR 2233-207-250-40 ON Fig.31

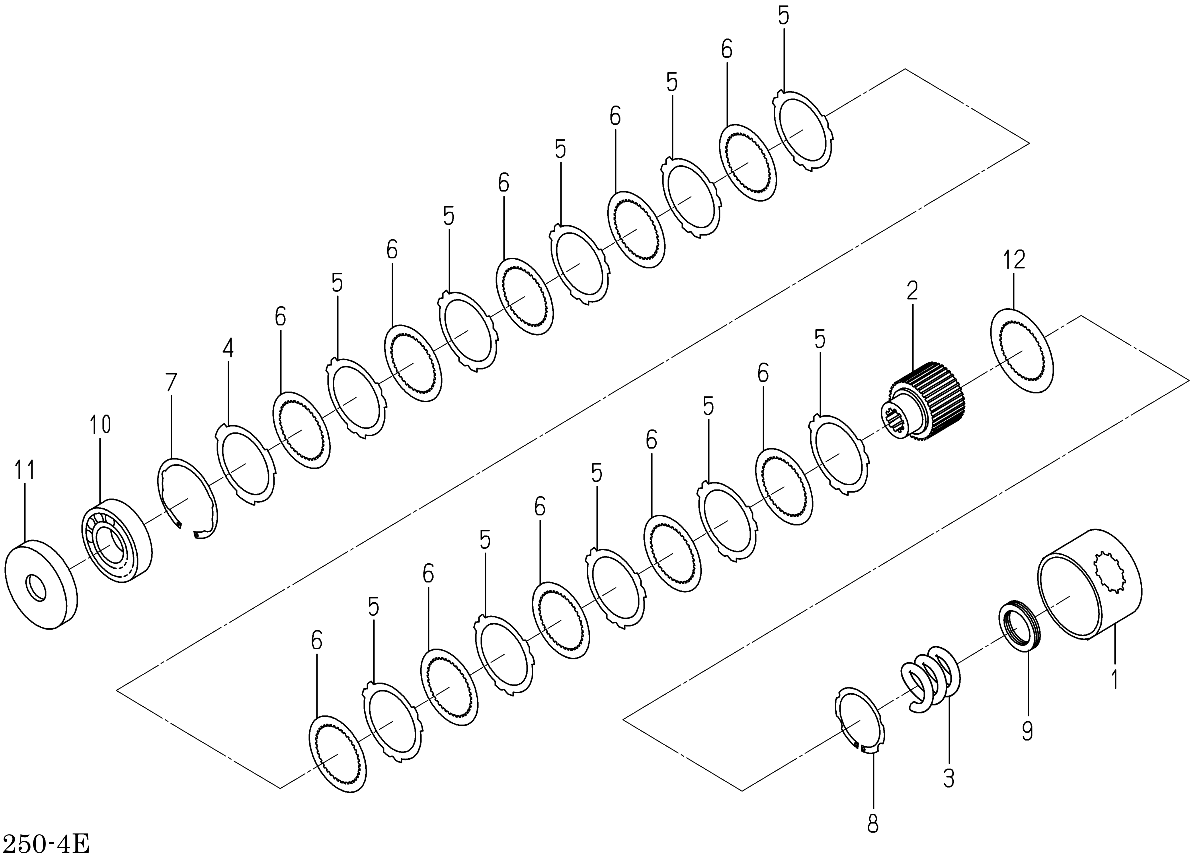

2233-207-250-4E

KEY	PART CODE	DESCRIPTION	SPC	TYPE OF MODEL NP60E16		ITC	COL	GRP	REMARKS
1	2233-207-251-00	CASE	*	2					
2	2232-207-202-00	SPLINEBOSS	*	2					
3	2232-207-203-00	SPRING	*	2					
4	2232-207-204-00	PLATE/1.6	*	2					
5	2232-207-205-00	PLATE/0.8	*	20					
6	2232-207-206-00	DISC	*	20					
7	2232-207-207-00	SNAPRING/HOLE	*	2					
8	2232-207-208-00	SNAPRING/SHAFT	*	2					
9	2232-207-209-00	THRUSTCOLLAR	*	2					
10	2232-207-211-00	BEARINGBALL	*	2					
11	2232-207-212-00	BEARINGCOVER	*	2					
12	2232-207-213-00	PLATESPLINE1.6	*	2					

Numerical Index

Part Code	Fig.	Key	Part Code	Fig.	Key	Part Code	Fig.	Key
5110-042-107-XX	1	1	5130-086-025-XX	2	3	5160-142-075-XX	8	7
5110-080-828-XX	1	2	5130-256-008-XX	2	4	5160-202-140-XX	8	8
5110-080-830-XX	1	3	5130-290-028-XX	2	5	5160-250-020-XX	8	9
5110-086-045-XX	1	4	5130-812-085-XX	11	2	5160-302-067-XX	8	10
5110-086-047-XX	1	5	5130-912-068-XX	11	3	5160-312-066-XX	8	11
5110-092-024-XX	8	1	5130-AA0-630-XX	7	25	5160-412-249-XX	8	12
5110-092-566-XX	4	1	5130-AB0-812-XX	1	34	5160-412-259-XX	8	13
5110-092-766-XX	6	1	5130-BA0-518-XX	6	27	5160-602-201-XX	8	14
5110-092-769-XX	8	2	5130-BA0-612-XX	4	17	5160-732-098-XX	11	6
5110-112-253-XX	9	1		6	28	5160-732-222-XX	8	15
5110-112-254-XX	9	2	5130-BA0-614-XX	6	29	5161-152-126-XX	4	5
5110-121-084-XX	5	1	5130-BA0-616-XX	5	26	5161-260-725-XX	8	16
5110-130-045-XX	9	3		6	30	5161-262-146-XX	1	13
5110-132-161-XX	9	4		7	26	5161-420-729-XX	5	10
5110-222-081-XX	1	6	5130-BA0-620-XX	5	27	5161-462-235-XX	11	7
5110-222-082-XX	1	7		6	31	5161-462-241-XX	11	8
5110-472-057-9H	9	5		8	44	5161-542-053-XX	4	6
5110-472-125-XX	9	6	5130-BA0-625-XX	1	35	5161-542-054-XX	4	7
5110-482-039-XX	5	2		6	32	5161-712-075-XX	7	4
5110-532-070-XX	7	1	5130-BA0-816-XX	1	36	5161-712-097-XX	7	5
5110-552-002-XX	10	1		5	28	5187-AA0-520-XX	9	11
5110-562-996-9H	5	3	5130-BA0-865-XX	1	37	5210-392-059-XX	11	9
5110-567-461-9H	5	4	5130-CA0-645-XX	5	29	5210-402-052-XX	11	10
5110-602-079-XX	9	7		6	33	5210-662-070-XX	6	2
5110-602-084-XX	5	5		8	45	5210-802-054-XX	11	11
5110-602-087-XX	8	3	5130-CA0-665-XX	5	30	5211-192-160-XX	6	3
5110-602-088-XX	8	4	5130-CA0-675-XX	5	31	5211-212-094-XX	6	4
5110-602-089-XX	1	8	5130-CA0-830-XX	11	21	5211-302-060-XX	6	5
5110-602-449-XX	1	9	5130-CA0-860-XX	1	38	5211-632-147-XX	11	12
5110-602-450-XX	5	6	5130-CA0-870-XX	5	32	5211-882-009-XX	8	17
5110-602-451-XX	5	7	5131-072-097-XX	5	8	5211-930-031-XX	6	6
5110-612-118-XX	9	8	5131-072-296-XX	4	2	5211-932-188-XX	6	7
5110-612-119-XX	8	5	5131-160-713-XX	3	9	5214-AA0-414-XX	8	46
5110-612-199-XX	1	10	5131-682-131-XX	11	4	5214-AA0-510-XX	6	34
5110-652-118-XX	11	1	5131-832-419-XX	4	3	5214-AA0-512-XX	4	18
5120-042-115-XX	3	1	5132-362-163-XX	7	2	5215-120-329-HX	1	14
5120-052-093-XX	3	2	5132-362-164-XX	7	3	5220-AA0-510-XX	10	10
5120-092-067-XX	3	3	5132-510-034-XX	2	6	5225-AA0-414-XX	6	35
5120-112-056-XX	3	4	5132-510-042-XX	2	7	5241-AA0-406-XX	6	36
5120-162-056-XX	3	5	5132-712-054-XX	1	11	5260-311-659-XX	6	8
5120-202-059-XX	3	6	5140-242-113-XX	4	4	5260-311-808-XX	6	9
5120-322-064-XX	3	7	5140-242-205-XX	11	5	5260-312-058-XX	6	10
5120-440-803-XX	3	8	5140-242-292-XX	1	12	5270-102-182-XX	6	11
5130-012-204-XX	2	1	5140-912-102-XX	5	9	5270-102-234-XX	6	12
5130-021-013-XX	2	2	5150-040-874-XX	8	6	5270-107-005-XX	11	13

Numerical Index

Part Code	Fig.	Key	Part Code	Fig.	Key	Part Code	Fig.	Key
5270-342-058-XX	6	13	5590-512-114-XX	4	11	5920-420-14X-XX	4	12
5311-AA0-600-XX	7	27	5590-710-733-XX	1	19		5	21
5311-BA0-600-XX	9	12	5590-712-079-XX	1	20	5920-431-037-XX	1	23
5312-AA0-500-XX	7	28	5590-712-119-XX	10	3	5920-432-006-XX	8	33
5320-852-097-XX	11	14	5590-760-011-XX	8	23	5920-432-227-XX	1	24
5390-032-102-XX	7	6	5592-562-057-XX	5	18	5920-492-109-XX	3	14
5390-622-051-XX	5	11	5593-362-052-XX	5	19	5920-492-111-XX	5	22
5390-762-053-XX	8	18	5670-B15-07X-XX	5	34	5920-492-112-XX	1	25
5391-082-057-XX	3	10	5670-B20-10X-XX	1	39	5920-492-255-XX	1	26
5391-292-091-XX	7	7	5670-B20-11X-XX	4	19	5920-552-086-XX	4	13
5411-AA0-600-XX	7	29	5670-B30-25X-XX	4	20	5920-552-148-XX	8	34
5420-362-060-XX	7	8	5701-Q05-100-0X	8	47	5920-592-011-XX	8	35
5430-560-008-XX	8	19	5920-022-087-XX	7	12	5920-630-036-XX	8	36
5430-782-055-XX	5	12	5920-022-254-XX	8	24	5920-630-714-XX	8	37
5461-DA0-600-XX	9	13	5920-022-269-XX	7	13	5920-632-415-XX	8	38
5480-J12-00X-XX	3	15	5920-022-277-XX	11	15	5920-640-022-XX	8	39
5490-156-268-XX	1	15	5920-042-142-XX	1	21	5920-650-23X-XX	1	27
5490-156-310-XX	1	16	5920-091-109-XX	3	12	5920-662-099-XX	4	14
5490-442-066-XX	5	13	5920-092-080-XX	8	25	5920-707-004-XX	6	21
5490-542-056-XX	5	14	5920-092-081-XX	8	26	5920-721-195-XX	6	22
5490-631-056-XX	5	15	5920-092-273-XX	6	16	5920-721-237-XX	6	23
5490-652-071-XX	4	8	5920-092-308-XX	1	22	5920-727-003-XX	6	24
5490-652-072-XX	4	9	5920-092-381-XX	7	14	5920-812-009-XX	8	40
5490-782-082-XX	3	11	5920-151-137-XX	3	13	5920-812-077-XX	8	41
5491-032-162-XX	7	9	5920-151-143-XX	10	4	5920-932-002-XX	8	42
5491-102-093-XX	7	10		11	16	5921-407-003-XX	4	15
5491-132-178-XX	7	11	5920-151-339-XX	7	15	5921-412-122-XX	1	28
5491-190-005-XX	2	8	5920-151-367-XX	6	17	5921-431-336-XX	9	9
5491-192-130-XX	2	9	5920-152-146-XX	11	17	5921-432-135-XX	7	16
5491-200-840-XX	1	17	5920-152-147-XX	11	18	5921-432-148-XX	7	17
5491-202-299-XX	1	18	5920-152-167-XX	6	18	5921-442-052-XX	7	18
5491-210-010-XX	8	20	5920-222-231-XX	8	27	5921-452-056-XX	7	19
5491-212-248-XX	8	21	5920-222-245-XX	6	19	5921-452-125-XX	7	20
5491-232-083-XX	8	22	5920-272-003-XX	8	28	5921-452-132-XX	4	16
5510-232-175-XX	10	2	5920-272-004-XX	8	29	5921-502-197-XX	6	25
5510-A51-00X-XX	6	37	5920-272-025-XX	8	30	5921-502-230-XX	5	23
5520-052-122-XX	4	10	5920-332-067-XX	8	31	5921-502-231-XX	5	24
5551-A03-14X-XX	5	33	5920-332-081-XX	11	19	5921-502-285-XX	9	10
5551-A04-08X-XX	2	16	5920-360-21X-XX	2	12	5921-512-067-XX	1	29
5590-262-066-XX	6	14	5920-371-181-XX	5	20		1	30
5590-312-121-XX	6	15	5920-372-001-XX	10	5	5921-512-068-XX	8	43
5590-412-084-XX	5	16	5920-372-006-XX	8	32	5921-521-846-XX	6	26
5590-510-746-XX	2	10	5920-372-113-XX	10	6	5921-530-009-XX	7	21
5590-512-112-XX	2	11	5920-372-208-XX	6	20	5921-532-054-XX	2	14
5590-512-113-XX	5	17	5920-382-103-XX	2	13		2	15

Numerical Index

Part Code	Fig.	Key	Part Code	Fig. Key	Part Code	Fig. Key
5921-532-130-XX	1	31				
5921-702-002-XX	1	32				
5921-702-042-XX	10	7				
5921-902-139-XX	10	8				
5921-912-055-XX	10	9				
5921-922-054-XX	1	33				
5922-002-035-XX	7	22				
5922-002-036-XX	7	23				
5922-002-044-XX	5	25				
5922-002-091-XX	7	24				
5922-102-085-XX	11	20				

Part Code	Fig.	Key	Part Code	Fig.	Key	Part Code	Fig.	Key
1373-121-001-00	25	4	6209-605-007-10	9	2	6211-312-003-20	27	14
1729-202-001-00	22	14	6209-610-001-10	5	3	6211-312-004-20	9	33
2182-104-520-00	25	1	6209-610-007-00	9	3		27	15
2213-101-018-00	18	24	6209-610-008-00	5	7	6211-341-081-00	8	1
	19	23	6209-610-009-00	5	4	6211-342-001-30	8	2
2213-101-210-00	11	3	6209-625-001-00	5	14	6211-361-104-00	7	1
3625-540-004-00	9	31		27	10	6211-510-001-00	5	10
3643-586-001-00	23	7	6209-625-002-00	9	4	6211-510-021-00	5	10-A
3805-355-002-20	7	2		27	12	6211-511-003-00	5	11
3817-401-001-00	9	7	6209-625-012-00	5	14-A	6211-511-004-00	5	12
	12	20	6209-630-002-10	26	6	6211-511-023-00	5	11-A
	18	7		27	21	6211-511-024-00	5	12-A
	18	12	6209-730-005-00	13	3	6211-540-001-00	6	1
	19	7		22	12	6211-540-018-00	6	1-A
	19	12	6209-730-006-00	16	4	6211-560-001-00	6	3
	22	9	6209-740-001-00	9	22	6211-560-007-00	6	3-A
6209-000-002-00	12	18	6209-740-005-00	5	17	6211-599-001-10	5	13
6209-000-004-10	5	2	6209-749-001-20	5	15		6	2
6209-000-043-00	16	9	6209-788-001-00	5	29		6	4
6209-000-044-00	1	7	6209-920-002-00	9	16	6211-599-012-00	5	13-A
6209-030-043-00	22	18		17	12		6	2-A
6209-044-001-00	22	26		27	13		6	4-A
6209-046-015-00	16	7	6209-940-004-00	12	14	6211-751-001-10	2	2
6209-050-001-00	9	28	6211-110-057-30	1	1	6211-760-053-10	5	31
6209-050-002-00	9	29	6211-110-057-40	1	1-A	6211-766-009-10	5	32
6209-300-014-00	1	8	6211-110-057-50	1	1-B	6211-777-007-30	10	1
6209-360-006-00	23	6	6211-141-029-20	1	6		11	1
6209-360-018-00	23	3		27	3	6212-111-094-20	14	1
6209-360-028-20	2	6	6211-170-004-20	2	1	6212-114-094-20	15	1
6209-360-143-00	23	5	6211-173-003-00	2	3	6212-116-094-20	15	3
6209-409-001-00	9	14		27	4	6212-121-014-20	14	2
6209-409-003-00	12	17	6211-210-037-80	5	1	6212-124-014-10	15	2
6209-440-007-00	25	6	6211-210-037-90	5	1-A	6212-126-014-10	15	4
6209-490-002-10	2	4	6211-210-113-00	5	1-B	6212-211-001-10	14	3
6209-490-006-00	9	15-A	6211-210-113-10	5	1-C	6212-230-004-10	14	5
6209-500-003-00	9	12	6211-258-001-00	5	8	6212-235-005-00	14	6
	9	21		27	8	6212-235-005-10	14	6-A
	27	22	6211-258-002-00	5	9	6212-271-016-00	14	7
6209-572-003-00	2	5		27	9	6212-274-016-00	6	5
	27	5	6211-291-001-10	5	25	6212-276-016-00	6	6
6209-580-002-10	22	29	6211-292-001-20	5	26	6212-310-009-50	16	1
6209-587-001-00	14	4		27	11	6212-330-095-10	16	5
6209-600-004-00	9	20	6211-310-069-00	9	1	6212-330-095-20	16	5-A
6209-605-004-10	1	3	6211-311-048-10	9	32	6212-333-003-00	16	6
6209-605-007-10	5	5	6211-312-003-20	9	23	6212-333-009-00	16	6-A

Numerical Index

Part Code	Fig.	Key	Part Code	Fig.	Key	Part Code	Fig.	Key
6212-371-074-10	16	8	6213-610-005-50	18	1	6215-331-008-00	28	2
6212-511-002-00	13	1		19	1	6215-332-013-00	28	5
6212-521-008-00	16	3	6213-612-004-00	18	3	6215-339-001-00	28	6
6212-522-010-00	13	2		19	3	6215-342-001-00	28	3
6212-523-023-00	13	6	6213-613-002-10	18	2	6215-343-001-00	28	4
6212-524-002-30	22	11		19	2	6215-345-001-00	28	7
6212-524-002-40	22	11-A	6213-614-003-10	19	5	6215-345-002-00	28	8
6212-531-014-00	5	6		27	17	6215-345-003-00	28	9
6212-535-001-00	13	4	6213-614-004-10	19	9	6215-345-004-00	28	10
6212-535-002-00	22	15		27	18	6215-345-005-00	28	11
6212-535-010-10	22	15-A	6213-614-018-00	18	5	6215-345-006-00	28	12
6212-535-014-00	13	4-A		19	5-A	6215-345-007-00	28	13
6212-551-028-00	12	1		27	17-A	6215-345-008-00	28	14
6212-552-014-00	12	2	6213-614-019-00	18	9	6215-345-009-00	28	15
6212-561-001-10	12	3		19	9-A	6215-345-010-00	28	16
6212-563-005-00	12	4		27	18-A	6215-345-011-00	28	17
6212-565-001-00	12	5	6213-619-001-00	18	8	6215-345-012-00	28	18
6212-569-002-00	1	4		19	8	6215-345-013-00	28	19
	27	2	6213-619-003-00	18	4	6215-345-014-00	28	20
6212-571-006-00	12	6		19	4	6215-345-015-00	28	21
6212-575-002-00	12	7	6213-641-022-20	20	1	6215-345-016-00	28	22
6212-600-002-10	12	8	6213-669-021-00	20	3	6215-345-017-00	28	23
6212-600-002-30	12	8-A	6213-669-022-00	20	4	6215-345-018-00	28	24
6212-611-004-10	12	9		20	4-A	6215-345-019-00	28	25
	12	9-A	6213-671-053-00	20	5	6215-345-020-00	28	26
6212-616-002-00	12	16	6213-674-046-00	25	2	6215-345-021-00	28	27
6212-620-001-20	12	10	6213-711-018-00	18	20	6215-345-022-00	28	28
6212-626-002-10	12	11		19	19	6215-345-023-00	28	29
6212-628-004-00	12	12	6213-716-001-60	18	15	6215-345-024-00	28	30
6212-628-005-00	12	13		19	15	6215-345-025-00	28	31
6213-100-003-30	17	1	6213-729-013-10	18	13	6215-345-026-00	28	32
6213-111-001-30	17	2		19	13	6215-345-027-00	28	33
6213-119-001-00	17	4	6213-743-002-10	18	16	6215-345-028-00	28	34
6213-129-003-00	17	3		19	16	6215-345-029-00	28	35
6213-129-006-00	5	16		27	19	6215-345-030-00	28	36
	5	16-A	6214-111-011-20	3	1	6215-345-031-00	28	37
6213-140-032-00	17	6	6214-115-001-20	3	2	6215-345-032-00	28	38
6213-140-032-10	17	6-A		27	6	6215-345-033-00	28	39
6213-149-001-00	17	8	6214-141-008-20	4	1	6215-345-034-00	28	40
6213-160-002-20	9	24	6214-145-001-30	4	2	6215-345-035-00	28	41
6213-161-001-20	9	25		27	7	6215-345-036-00	28	42
6213-164-001-00	9	26	6215-300-036-10	21	1	6215-345-037-00	28	43
6213-240-002-20	17	13	6215-311-027-00	28	51	6215-345-038-00	28	44
6213-311-006-00	17	10	6215-315-002-00	21	3	6215-345-039-00	28	45
6213-319-001-00	5	24	6215-330-024-10	28	1	6215-345-040-00	28	46

Part Code	Fig.	Key	Part Code	Fig.	Key	Part Code	Fig.	Key
6215-345-041-00	28	47	6215-629-010-00	29	25	6281-129-071-00	30	18
6215-345-042-00	28	48	6215-629-011-00	29	26	6281-129-072-00	30	21
6215-345-043-00	28	49	6215-629-012-00	29	27	6281-129-073-00	30	22
6215-359-001-00	21	2	6215-629-013-00	29	28	6281-129-074-00	30	23
6215-359-002-00	28	50	6215-629-014-00	29	29	6281-129-075-00	30	24
6215-411-125-00	23	2	6215-629-015-00	29	30	6281-129-076-00	30	25
6215-411-126-10	21	4	6215-629-016-00	29	31	6281-129-077-00	30	26
6215-411-127-00	21	5	6215-631-035-00	29	7	6281-129-078-00	30	27
6215-411-128-00	21	6	6215-634-001-00	29	16	6281-129-079-00	30	34
6215-412-004-00	23	1	6215-635-001-00	29	14	6281-129-080-00	30	8
6215-520-001-00	22	17	6215-637-001-00	29	13	6281-151-014-00	30	20
6215-526-004-00	22	19	6215-639-004-00	29	15	6281-410-026-10	26	3
6215-531-025-00	22	24	6215-639-005-00	29	17	6281-910-013-00	26	5
6215-541-001-10	22	20	6215-641-006-00	29	5	6281-971-001-10	26	1
6215-541-012-20	22	25	6215-643-006-00	29	1	6282-450-008-00	26	2
6215-541-016-40	24	2	6215-644-007-00	29	2	6287-810-035-00	27	1
6215-541-016-50	24	2-A	6215-649-002-00	29	4	6287-810-035-10	27	1-A
6215-542-004-20	9	17	6215-649-019-00	29	3	6294-453-002-00	5	21
6215-542-005-20	9	19	6219-732-017-00	26	4	6513-770-022-10	18	19
6215-542-006-00	22	22	6219-752-044-00	22	5	6901-911-020-00	8	3
6215-543-002-10	22	21	6219-752-045-00	22	4	6901-911-025-00	25	8
6215-546-003-30	9	13	6219-752-046-00	22	6	6902-050-816-00	9	34
6215-548-082-10	24	1	6219-752-047-00	22	7	6904-110-818-00	5	19
6215-548-082-20	24	1-A	6281-100-014-00	25	7	6904-110-822-00	4	4
6215-549-007-10	22	30	6281-111-009-00	30	1		5	20
6215-549-012-00	22	34	6281-115-017-00	30	10	6904-110-840-00	5	18
6215-549-013-00	5	28	6281-115-018-00	30	11		18	10
6215-600-156-20	22	1	6281-117-003-00	30	4		19	10
6215-611-001-00	29	6	6281-118-007-00	30	3	6909-110-408-00	30	32
6215-612-001-00	29	9	6281-119-009-00	30	2	6909-150-508-00	30	31
6215-619-009-00	22	3	6281-121-010-00	30	5	6909-902-299-00	5	22
6215-619-010-00	22	2	6281-124-011-00	30	6	6909-906-105-10	17	11
6215-619-022-00	29	8	6281-127-003-00	30	19	6911-129-006-00	1	2
6215-621-016-20	22	10	6281-129-029-00	30	29	J061-210-015-00	18	14
6215-621-016-30	22	10-A	6281-129-030-00	30	28		19	14
6215-622-001-00	29	12	6281-129-043-00	30	30	J062-076-082-00	23	4
6215-629-001-00	29	10	6281-129-058-00	30	9	J062-087-093-00	23	8
6215-629-002-00	29	11	6281-129-062-00	30	33	P117-303-003-00	9	18
6215-629-003-00	29	18	6281-129-064-00	30	7	V201-360-802-00	22	8
6215-629-004-00	29	19	6281-129-065-00	30	12	V210-560-601-20	13	5
6215-629-005-00	29	20	6281-129-066-00	30	13		22	16
6215-629-006-00	29	21	6281-129-067-00	30	14	V210-560-602-50	17	5
6215-629-007-00	29	22	6281-129-068-00	30	15	V211-560-802-00	9	35
6215-629-008-00	29	23	6281-129-069-00	30	16	V211-560-802-50	4	3
6215-629-009-00	29	24	6281-129-070-00	30	17	V230-360-601-00	7	4

Numerical Index

Part Code	Fig.	Key	Part Code	Fig.	Key	Part Code	Fig.	Key
V230-360-601-20	5	27	V720-101-900-80	22	28			
V230-360-601-60	20	2	V720-102-401-50	17	7			
	26	7		27	16			
V231-360-801-60	9	8	V720-102-401-80	7	3			
	17	9	V723-102-005-50	18	21			
V231-360-802-00	3	3		19	20			
	11	4		27	20			
	18	11	V782-160-000-4T	5	23			
	18	17						
	19	11						
	19	17						
	25	3						
V231-360-802-50	9	36						
	18	22						
	19	21						
V231-360-803-00	9	11						
V231-360-804-00	3	4						
	18	23						
	19	22						
V231-360-804-50	9	9						
	18	6						
	19	6						
V231-360-805-00	12	19						
V231-360-805-50	9	6						
V231-360-807-50	9	10						
	18	18						
	19	18						
V231-360-808-50	9	5						
V233-361-002-00	10	2						
	11	2						
V233-361-007-00	25	5						
V301-260-006-00	5	30						
	9	30						
	22	31						
V302-260-006-00	22	27						
V305-260-008-00	9	14-A						
V341-120-008-00	9	15						
V401-160-006-00	22	33						
V411-260-006-00	22	32						
V523-101-001-80	16	2						
V600-110-620-30	22	13						
V682-200-000-60	1	5						
V704-140-016-00	12	15						
V705-140-012-00	9	27						
V710-140-004-00	22	23						

Part Code	Fig.	Key
1110-401-002-00	16	9
	19	19
	20	19
1308-230-002-00	121	46
	122	49
1329-106-002-00	80	14
	81	14
1337-708-007-00	42	5
1337-721-002-00	17	11
1342-402-006-00	3	51
	4	47
	103	33
	106	28
1376-402-003-00	4	45
	4	45-A
	12	18
	42	18
	103	32
	106	27
	132	3
	135	92
	140	5
1421-201-002-00	172	45
	173	35
1421-621-038-00	4	7
	4	46
1425-621-004-00	3	19
	31	16
	61	5
	121	6
	122	6
	150	23
1426-406-203-00	61	2
1426-621-038-00	98	5
1444-621-242-00	151	2
1488-611-003-10	95	6
1491-623-222-00	99	34
	100	35
	101	35
	102	35
1491-623-223-00	99	35
	100	36
	101	36
	102	36
1541-621-210-00	94	7
1544-104-205-00	4	22
1544-623-008-10	103	24
	106	20
1560-132-007-30	16	21
	19	15
	20	15
	120	23
	130	61
	131	60
1560-214-003-00	60	48
1560-666-004-00	119	4
1560-695-021-00	16	18
	19	12
	20	12
	44	1
	120	20
	130	62
	131	61
1560-695-022-00	16	20
	19	14
	20	14
	120	21
	130	60
	131	59
1564-263-002-00	58	51
	60	47
1575-616-005-00	134	11
1594-221-001-00	58	9
	60	9
1600-619-212-00	94	8
1614-690-202-00	103	18
	104	15
	105	19
1650-102-202-10	3	22
1650-104-201-00	4	23
1650-509-280-00	76	7
	77	7
1650-650-222-00	103	9
	103	9-A
	104	8
	105	9
	105	9-A
	106	8
1650-650-243-00	103	10
	105	10
1650-650-243-00	106	9
1650-652-390-00	99	46
	100	47
	101	47
	102	47
1650-658-270-00	103	26
	104	23
	105	27
	106	22
1675-104-211-00	4	20
1675-104-213-00	4	21
1675-503-001-00	75	4
1675-695-005-00	99	16
	100	16
	101	17
	102	17
1690-505-240-00	121	53
	122	56
1690-652-210-00	103	25
	104	22
	105	26
	106	21
1705-408-230-00	76	9
	77	9
1716-601-003-00	111	6
	153	8
1716-601-003-10	111	6-A
	153	8-A
1716-680-200-20	99	21
	102	22
1716-782-005-00	3	35
1716-901-016-00	162	5
	163	6
	164	5
	165	6
1719-630-051-00	87	12
	88	12
1719-650-250-00	103	13
	104	10
	105	13
	106	11
1719-730-002-00	3	27
	4	10
1725-210-002-00	17	15
	18	21

Numerical Index

Part Code	Fig.	Key
1725-508-001-00	66	5
1728-104-210-00	4	19
1728-112-250-10	108	4
1729-111-006-10	12	10
	13	9
1729-111-280-20	12	6
	13	6
1729-111-283-00	12	7
	13	7
1729-111-284-00	12	8
	13	8
1729-609-240-00	99	15
	100	15
	101	16
	102	16
1729-662-330-00	19	5
	20	5
	74	9
	115	12
1729-662-340-00	14	19
	15	19
	72	8
	73	8
	120	14
	128	14
	145	23
	146	23
1740-680-530-20	99	40
	100	41
	101	41
	102	41
1754-640-230-10	103	35
	104	25
	105	29
	106	30
1756-905-071-00	158	4
	159	4
	160	4
	161	4
1757-509-012-00	75	10
2110-325-003-00	121	42
	122	45
2111-441-019-20	57	65
	58	65
2120-340-003-00	120	3
2120-409-004-00	126	7
2130-601-018-00	153	21
	157	5
2130-610-012-00	121	31
	122	34
2130-725-006-00	115	15
	115	36
2130-755-002-00	61	8
2130-802-011-10	141	8
	142	8
2130-802-208-00	150	6
2132-161-005-00	148	27
	149	27
2132-210-005-00	37	6
	37	12
	37	18
2132-513-001-00	89	6
2132-544-200-10	151	1
2132-545-008-00	78	9
	115	8
	128	13
2132-801-220-10	150	27
2133-812-009-00	89	8
2137-330-004-00	120	9
2139-807-005-00	152	8
2140-420-012-10	112	28
2142-101-005-00	117	8
2142-307-002-00	40	5
	41	5
2142-407-002-10	10	12
2142-736-203-10	148	26
	149	26
2142-736-214-00	148	8
	149	8
2142-736-221-00	148	17
	149	17
2142-736-224-00	148	7
	149	7
2142-736-235-00	174	3
	175	3
2142-736-236-00	121	5
	122	5
	123	13
	138	31
2142-736-239-00	174	15
2142-736-239-00	175	15
2142-736-271-00	148	12
	149	12
2144-117-002-00	97	4
2144-301-005-10	61	3
2144-337-007-00	7	8
	9	8
2144-501-011-10	3	16
	3	38
	3	46
	87	24
	87	32
	87	51
	88	24
	88	32
	89	4
	99	25
	100	26
	101	26
	102	26
2144-542-220-00	99	33
	100	34
	101	34
	102	34
2144-604-002-10	122	9
2144-701-021-00	28	13
	29	13
	35	32
	36	32
2144-701-021-10	28	13-A
	29	13-A
	35	32-A
	36	32-A
2144-735-006-00	5	12
2144-738-216-00	148	15
	149	15
2145-420-001-20	54	3
	55	3
2145-542-230-00	132	16
2145-542-232-10	132	17
2145-751-003-00	138	51
2145-751-004-00	90	8
	91	8
	92	5
	93	5

Part Code	Fig.	Key	Part Code	Fig.	Key	Part Code	Fig.	Key
2145-751-004-00	133	29	2161-330-004-00	60	31	2161-735-006-00	120	10
	134	29	2161-506-005-00	99	28		120	12
2145-770-014-00	130	57		100	29		129	6
	131	56		101	29		133	24
	135	21		102	29	2161-738-008-00	148	19
	135	57	2161-513-051-10	87	31		149	19
2145-770-214-00	38	6		88	31	2161-738-222-00	174	6
	177	14		89	3		175	6
	178	14	2161-528-001-00	97	7	2161-738-611-00	148	16
2145-770-215-00	38	5-A	2161-532-202-00	98	2	2161-739-611-00	149	16
2145-774-003-00	115	16	2161-532-203-00	98	3	2161-831-003-10	150	15
	124	2	2161-612-002-10	124	4	2161-831-007-00	150	21
	130	8	2161-615-014-00	19	39	2161-831-209-00	150	10
	130	10		20	38	2161-831-211-00	150	7
	131	8		21	8		150	19
	131	10		22	7	2161-831-231-30	150	2
2146-640-001-60	127	1	2161-701-005-00	138	28	2161-834-001-40	153	17
2150-761-005-00	177	35	2161-701-005-10	138	28-A	2161-834-001-50	153	17-A
	178	35	2161-701-006-10	138	29	2161-834-004-00	150	8
2151-250-003-00	177	4	2161-735-005-00	54	5	2161-834-007-00	153	15
	177	23		54	8	2161-835-019-00	155	26
	178	4		57	66	2161-835-021-00	155	28
	178	23		58	66	2161-835-022-00	155	29
2151-602-006-00	61	8-A		62	13	2162-105-001-00	5	3
2151-603-003-00	17	10		62	25	2162-330-007-00	57	56
2151-810-004-10	99	36		103	28		58	56
	100	37		104	19		59	52
	101	37		105	23		60	52
	102	37		106	23	2162-940-001-00	170	2
2157-201-004-10	57	6		112	30	2163-526-006-00	87	28
	58	6		133	26		88	28
	59	6		135	95		89	12
	60	6		155	52	2163-617-004-00	127	2
2161-103-001-00	6	2	2161-735-006-00	16	30	2163-802-007-00	112	18
2161-201-001-00	23	8-A		19	35	2163-870-003-10	87	25
2161-214-003-00	39	3		19	35-A		88	25
	56	7		20	34	2163-870-035-20	87	26
2161-320-001-00	4	43		20	34-A		88	26
2161-321-001-00	52	3		21	4	2171-513-002-00	21	2
	53	3		22	3	2171-519-019-10	62	16
2161-330-004-00	57	30		39	5	2172-124-004-00	97	3
	57	41		44	6		135	103
	58	30		62	15	2172-312-002-00	45	44
	58	41		74	14		46	40
	59	31		89	7-A	2175-325-007-00	90	9

Numerical Index

Part Code	Fig.	Key
2175-325-007-00	91	9
	92	6
	93	6
2175-528-008-20	97	9
2178-421-003-00	16	10
	19	20
	20	20
2178-503-246-00	45	36
	46	31
2178-631-013-00	18	10
2180-203-002-00	35	28
	36	28
2182-803-008-00	136	3
2183-526-001-10	145	4
	146	4
2183-526-008-00	38	15
	135	90
2183-613-003-00	125	6
	143	5
2183-880-018-00	130	40
	131	39
2186-124-052-00	38	21
2186-312-002-00	45	47
	46	43
2186-336-003-00	74	13
2186-401-001-10	64	3-A
2186-508-009-00	80	6
	80	18
	81	6
	81	18
	83	4
	84	4
	87	8
	88	8
2186-508-017-00	57	71
	58	71
2186-528-007-00	97	8
2186-528-244-00	97	10
	134	37
2186-533-002-00	70	8
	71	8
2186-536-210-20	100	21
	101	22
2186-536-211-00	99	22
	100	22

Part Code	Fig.	Key
2186-536-211-00	101	23
	102	23
2186-536-212-00	99	23
	100	23
	101	24
	102	24
2186-703-220-02	138	36
2186-707-001-00	145	7
	146	7
2186-707-006-00	145	6
	146	6
2186-738-038-20	64	8
	148	18
	149	18
	150	16
2186-738-059-00	174	22
	175	22
2186-740-033-20	174	18
	175	18
2186-801-001-00	150	18
2186-801-701-00	150	3
2186-801-702-00	150	4
2186-802-051-00	151	5
2186-804-008-00	153	19
2186-804-300-00	153	1
2186-805-003-00	135	84
	155	18
2186-805-004-20	155	22
2186-805-005-00	155	20
2186-805-008-00	155	34
2186-805-011-00	140	12
	155	35
2186-805-026-00	150	31
2186-916-001-20	158	1
	159	1
	160	1
	161	1
2186-916-002-20	158	2
	159	2
	160	2
	161	2
2186-916-007-10	158	5
	159	5
	160	5
	161	5

Part Code	Fig.	Key
2186-916-009-20	158	6
	159	6
	160	6
	161	6
2186-916-010-30	158	7
	159	7
	160	7
	161	7
2186-916-019-10	162	18
	163	18
	164	18
	165	18
2186-916-032-20	162	16
	164	16
2186-916-035-10	162	17
	163	17
	164	17
	165	17
2186-916-042-00	158	10
	159	9
	160	9
	161	10
2186-916-043-00	158	11
	159	10
	160	10
	161	11
2186-916-044-00	158	12
	159	11
	160	11
	161	12
2186-916-045-00	158	13
	159	12
	160	12
	161	13
2186-916-046-00	158	14
	159	13
	160	13
	161	14
2188-105-004-00	10	11
2188-201-007-00	23	11
2188-208-015-00	130	32
	130	46
	131	32
	131	45
	133	34

Part Code	Fig.	Key	Part Code	Fig.	Key	Part Code	Fig.	Key
2188-301-006-00	61	12	2194-901-016-00	151	8	2204-323-011-00	77	4
2188-804-004-00	153	3	2197-704-002-00	99	4	2204-331-008-00	61	9
2190-805-012-00	147	4		100	4	2204-336-002-00	62	7
2190-916-007-00	162	14	2197-803-003-00	87	40	2204-336-005-00	62	14
	163	15	2200-911-004-00	3	20	2204-336-009-00	62	10
	164	14	2201-201-002-00	121	34		87	35
	165	15		122	37	2204-343-001-00	63	3
2190-916-008-00	162	15	2204-101-001-20	3	8	2204-401-200-00	64	1
	163	16	2204-101-390-50	3	9	2204-411-001-00	67	2
	164	15	2204-101-950-00	1	1		68	2
	165	16	2204-102-002-00	3	34	2204-440-001-20	76	5
2190-916-011-00	103	16-A	2204-102-002-10	3	34-A	2204-440-001-30	76	5-A
2194-106-002-00	7	9	2204-105-013-00	7	3		77	5
	9	9		8	8	2204-440-300-10	76	1
2194-210-001-00	37	4		9	3		77	1
	37	10	2204-105-240-20	7	5	2204-440-310-00	76	2
2194-301-009-00	76	3		9	5		77	2
	77	3	2204-106-210-00	11	1	2204-501-005-00	80	2
2194-321-001-00	52	4	2204-111-005-40	12	13		81	2
	53	4	2204-111-006-10	12	5	2204-508-052-00	80	13
2194-338-003-20	117	3		13	5		81	13
	119	3	2204-111-025-00	13	20		83	2
2194-410-006-00	23	9	2204-124-005-00	14	23		84	2
2194-419-009-00	57	36	2204-124-006-00	14	24	2204-512-003-10	85	5
	58	36		15	24		86	5
2194-419-020-00	59	36	2204-124-631-00	14	2	2204-513-003-00	87	49
	60	36		15	2		141	18
2194-508-008-00	85	8	2204-201-003-00	23	8		142	18
	86	9	2204-207-001-10	30	6	2204-513-014-00	89	9
2194-508-009-00	85	10		31	6	2204-513-021-00	87	23
2194-508-016-00	134	7	2204-207-012-30	30	10		88	23
2194-508-220-10	85	7		31	10	2204-513-025-01	87	16
	86	8	2204-208-002-10	32	7		88	16
2194-543-001-00	115	7	2204-208-007-20	32	6	2204-513-026-00	87	7
	128	12	2204-208-018-00	32	14		88	7
2194-543-200-00	87	19	2204-222-001-00	40	3		141	17
	88	19		41	3	2204-513-027-01	87	18
	115	4	2204-302-200-10	42	6		88	18
	128	9	2204-323-011-00	50	2	2204-513-028-00	87	22
2194-701-010-00	35	11		51	2		88	22
	36	11		57	59	2204-513-630-10	87	27
	59	37		58	59		88	27
	60	37		59	55	2204-513-650-32	89	1
	138	18		60	55	2204-513-660-32	89	2
2194-701-020-00	138	21		76	4	2204-513-670-02	89	5

Numerical Index

Part Code	Fig.	Key	Part Code	Fig.	Key	Part Code	Fig.	Key
2204-513-680-00	89	11	2204-537-501-00	103	2-A	2204-589-068-00	116	7
2204-513-700-21	87	1		104	2		116	29
	88	1		105	2-A	2204-589-500-00	116	1
2204-513-720-21	87	3		106	2	2204-589-510-00	116	25
	88	3	2204-538-211-00	103	2	2204-601-007-10	7	4
2204-513-730-21	87	4		105	2		8	5
	88	4	2204-539-200-30	107	1		9	4
2204-513-740-21	87	5	2204-542-200-00	99	43		50	3
	88	5		100	44		51	3
2204-513-760-11	87	9		101	44	2204-603-009-00	137	10
	88	9		102	44	2204-607-022-00	121	40
2204-513-780-11	87	10	2204-556-003-00	38	4		122	43
	88	10	2204-581-049-00	113	8	2204-618-002-00	128	3
2204-513-790-11	87	11	2204-582-012-00	114	8	2204-618-008-00	128	7
	88	11	2204-582-015-00	114	10	2204-618-200-30	128	1
2204-514-003-00	90	11		114	15	2204-706-011-10	143	2
	91	11		114	15-A	2204-738-001-00	174	17
	92	8		129	4		175	17
	93	8	2204-582-052-00	114	1	2204-738-001-10	174	17-A
2204-514-210-00	90	7	2204-582-055-00	114	2		175	17-A
	91	7		114	12	2204-738-004-00	174	8
	92	4	2204-582-059-00	114	5		175	8
	93	4	2204-582-062-00	114	4	2204-738-005-00	174	25
2204-515-001-02	94	2		114	14		175	25
2204-515-300-02	94	1	2204-582-063-00	114	3	2204-738-059-00	134	38
2204-530-200-00	87	21		114	13		174	19
	88	21	2204-589-051-00	116	2		175	19
2204-530-300-00	101	14	2204-589-052-00	116	26	2204-738-080-10	170	1
	102	14	2204-589-053-00	116	3		171	1
2204-536-551-00	99	18	2204-589-057-10	116	6		171	3
	100	18		116	28	2204-738-240-20	174	7
	101	19	2204-589-058-10	116	9		175	7
	102	19		116	31	2204-738-273-00	148	5
2204-537-002-00	72	7	2204-589-059-10	116	36	2204-738-274-00	148	9
	73	7	2204-589-061-10	116	14		149	9
	103	21	2204-589-062-00	116	19	2204-738-275-20	148	10
	103	31	2204-589-063-00	116	15	2204-738-277-00	148	11
	104	17	2204-589-065-00	116	13	2204-738-282-20	148	3
	105	21		116	18	2204-738-283-00	148	5-A
	106	17		116	20	2204-738-284-00	148	9-A
	106	26		116	33		149	9-A
2204-537-202-00	103	7		116	40	2204-738-304-20	174	4
	104	6	2204-589-066-00	116	5		175	4
	105	7		116	27	2204-738-307-00	174	28
	106	6	2204-589-067-00	116	24	2204-738-312-00	174	20

Part Code	Fig.	Key	Part Code	Fig.	Key	Part Code	Fig.	Key
2204-738-312-00	175	20	2204-803-025-00	152	18	2213-102-403-00	4	4
2204-738-313-00	148	21	2204-803-068-00	130	6	2213-102-404-00	4	5
	149	21		131	6	2213-102-405-00	4	6
2204-738-318-10	174	16		133	50	2213-111-002-10	13	18
	175	16		134	39	2213-111-014-00	12	11
2204-738-319-00	174	26		137	28	2213-111-300-10	12	3
	175	26		152	17		13	3
2204-738-323-00	148	22	2204-803-350-00	152	15	2213-204-200-00	28	7
	149	22	2204-804-400-00	153	2		29	7
2204-738-325-00	174	27	2204-805-005-10	155	19	2213-310-004-00	45	3
	175	27	2204-805-008-00	155	25		45	51
2204-738-340-10	148	2	2204-805-025-00	155	27		46	3
2204-738-412-10	174	2	2204-831-001-00	153	11		46	47
	175	2	2204-916-001-00	158	8	2213-330-006-10	57	4
2204-738-413-10	174	14		159	8		58	4
	175	14		160	8		59	4
2204-738-414-10	174	11		161	8		60	4
	175	11	2204-916-002-00	158	3	2213-413-001-10	69	3
2204-738-440-40	148	1		159	3	2213-422-022-00	121	35
2204-738-440-60	148	1-A		160	3		122	38
2204-738-440-70	148	1-B		161	3	2213-508-004-00	49	2
2204-738-440-80	148	1-C	2204-916-022-20	166	3		80	9
2204-738-450-00	148	20	2209-508-013-00	85	9		80	12
2204-738-450-20	148	20-A		86	10		81	9
2204-738-450-30	148	20-B	2209-518-002-10	62	19		81	12
2204-739-273-00	149	5	2209-801-203-00	157	2	2213-512-003-10	85	2
2204-739-275-20	149	10	2212-581-009-00	103	27		86	2
2204-739-277-00	149	11		103	34	2213-516-006-00	115	32
2204-739-282-20	149	3		104	24		141	19
2204-739-283-00	149	5-A		105	28		142	19
2204-739-307-00	175	28		106	29	2213-517-003-10	95	4
2204-739-340-10	149	2	2213-101-001-10	2	1	2213-517-201-00	95	2
2204-739-440-40	149	1	2213-101-002-10	2	2	2213-581-200-10	113	6
2204-739-440-60	149	1-A	2213-101-015-10	2	21	2213-583-053-00	115	24
2204-739-440-70	149	1-B	2213-101-016-00	2	22	2213-607-041-10	121	26
2204-739-440-80	149	1-C	2213-101-027-00	3	17		122	29
2204-739-450-00	149	20	2213-101-250-10	3	6	2213-607-042-20	121	27
2204-739-450-20	149	20-A	2213-101-602-10	3	30		122	30
2204-739-450-30	149	20-B	2213-102-002-00	4	15	2213-701-001-10	138	40
2204-801-017-00	140	6	2213-102-031-20	3	15	2213-701-003-10	138	39
2204-801-018-00	140	7	2213-102-052-00	4	49	2213-701-023-00	19	29
2204-801-019-00	140	8	2213-102-300-10	3	21		20	29
2204-803-015-20	152	13	2213-102-400-00	4	1		138	20
2204-803-016-20	152	14	2213-102-401-00	4	2	2213-703-210-10	140	2
2204-803-024-00	152	19	2213-102-402-00	4	3	2213-738-301-20	174	1

Numerical Index

Part Code	Fig.	Key	Part Code	Fig.	Key	Part Code	Fig.	Key
2213-738-301-30	174	1-A	2232-105-007-10	8	3	2232-132-006-30	20	32-A
2213-738-301-40	174	1-B		9	2	2232-132-006-40	19	33-B
2213-739-301-20	175	1	2232-105-011-10	9	1		20	32-B
2213-739-301-30	175	1-A	2232-111-001-10	12	1	2232-132-007-20	19	34
2213-739-301-40	175	1-B		13	1		20	33
2213-801-008-00	140	9	2232-111-006-00	13	11	2232-132-007-30	19	34-A
2213-801-014-00	140	10	2232-111-007-00	12	14		20	33-A
2213-803-009-10	152	11		13	10	2232-132-007-40	19	34-B
2213-804-007-00	153	5	2232-111-008-00	12	11-A		20	33-B
2213-916-005-00	163	12		12	15	2232-132-008-00	19	1
	165	12	2232-111-011-00	12	17		20	1
2213-916-008-00	162	11	2232-124-001-00	14	12	2232-132-009-00	19	38
	164	11		15	12		20	37
2213-916-060-00	162	19	2232-124-003-00	14	5	2232-132-210-10	19	18
	164	19		15	5		20	18
2220-101-700-00	5	1	2232-124-004-10	14	21	2232-132-220-00	19	11
2220-618-002-10	118	1	2232-124-200-20	14	1		20	11
2221-111-200-00	12	19		15	1	2232-132-230-00	19	25
	13	13	2232-124-240-00	14	8		20	25
2221-111-200-10	12	19-A		15	8	2232-132-230-20	19	25-A
	13	13-A	2232-124-250-20	14	11		20	25-A
2232-101-002-00	3	13	2232-125-001-00	16	6	2232-132-240-10	19	31
2232-101-004-00	3	7	2232-125-003-00	16	26	2232-132-240-20	19	31-A
2232-101-061-00	3	29	2232-125-005-00	16	28		20	31-A
2232-101-230-10	5	13	2232-125-006-00	16	3	2232-132-280-00	19	20-A
2232-102-007-00	3	47	2232-125-007-00	16	24		20	20-A
2232-102-011-20	3	24	2232-125-008-00	16	29	2232-137-001-10	21	1
2232-102-015-10	3	45	2232-125-009-00	16	25	2232-137-006-00	21	10
2232-102-015-20	3	45-A	2232-125-200-00	16	1	2232-137-200-10	21	5
2232-102-016-10	3	37	2232-125-230-00	16	17	2232-137-200-20	21	5-A
2232-102-022-00	3	32	2232-125-250-00	16	8	2232-137-220-00	21	3
2232-102-023-00	4	49-A	2232-131-001-10	17	9	2232-201-001-50	23	1
2232-102-024-00	3	37-A	2232-131-003-00	17	14	2232-201-002-20	23	2
2232-102-032-00	3	47-A	2232-131-005-00	17	16	2232-201-003-10	23	15
2232-102-033-00	3	48	2232-132-001-00	19	26	2232-201-004-00	23	4
2232-102-034-00	3	49		20	26	2232-201-005-00	23	17
2232-102-036-00	3	39-A	2232-132-004-00	19	9	2232-201-006-00	23	14
2232-102-037-00	3	55		20	9	2232-201-007-10	23	20
2232-102-038-00	3	56	2232-132-004-10	19	9-A	2232-201-008-10	23	21
2232-102-250-10	3	25		20	9-A	2232-202-200-10	24	1
2232-102-260-40	3	39	2232-132-005-10	19	7	2232-203-200-10	26	1
2232-102-270-00	3	54		20	7	2232-204-001-20	28	1
2232-103-200-10	6	1	2232-132-006-20	19	33		29	1
2232-105-005-10	7	1		20	32	2232-204-002-30	28	2
2232-105-007-10	7	2	2232-132-006-30	19	33-A		29	2

Part Code	Fig.	Key	Part Code	Fig.	Key	Part Code	Fig.	Key
2232-204-004-00	28	4	2232-208-004-00	32	18	2232-211-025-10	36	33-A
2232-204-005-00	28	5	2232-208-005-10	32	15	2232-211-033-10	35	14
	29	5	2232-208-006-00	32	12		36	14
2232-204-006-00	28	6	2232-208-007-00	32	13	2232-211-034-00	35	17
	29	6	2232-208-008-00	32	19		36	17
2232-204-008-00	28	12	2232-208-009-10	32	2	2232-211-035-00	35	13
	29	12	2232-208-011-10	32	3		36	13
2232-204-210-00	28	14	2232-208-011-30	32	3-A	2232-211-038-00	35	4
	29	14	2232-208-014-00	32	4		36	4
2232-207-001-00	30	1	2232-209-001-10	33	4	2232-211-200-10	35	29
	31	1		34	4		36	29
2232-207-002-20	30	7	2232-209-005-00	33	7	2232-211-210-10	35	3
	31	7		34	7	2232-211-210-20	35	3-A
2232-207-004-00	30	4	2232-209-006-00	33	8	2232-212-001-00	37	3
	31	4	2232-209-007-00	33	1	2232-212-003-00	37	16
2232-207-200-00	30	5		34	1	2232-212-200-10	37	1
2232-207-200-10	30	5-A	2232-211-001-20	35	1	2232-212-210-00	37	8
2232-207-200-20	30	5-B		36	1	2232-212-220-00	37	14
2232-207-201-00	176	1	2232-211-003-00	35	5	2232-213-002-10	38	2
2232-207-202-00	176	2		36	5		38	9
	179	2	2232-211-004-00	35	6	2232-213-200-20	38	8
2232-207-203-00	176	3		36	6	2232-213-210-10	38	13
	179	3	2232-211-005-00	35	7	2232-213-210-20	38	13-A
2232-207-204-00	176	4		36	7	2232-213-220-30	38	1
	179	4	2232-211-006-20	35	8	2232-213-220-40	38	1-A
2232-207-205-00	176	5		36	8	2232-215-210-00	39	1
	179	5	2232-211-007-00	35	16	2232-215-230-10	39	4
2232-207-206-00	176	6		36	16	2232-222-250-00	41	1
	179	6	2232-211-013-00	35	26	2232-222-250-10	41	1-A
2232-207-207-00	176	7		36	26	2232-222-260-00	41	2
	179	7	2232-211-014-10	35	27	2232-222-260-10	41	2-A
2232-207-208-00	176	8		36	27	2232-302-001-20	42	22
	179	8	2232-211-015-10	35	20	2232-302-002-10	42	14
2232-207-209-00	176	9		36	20	2232-302-003-00	42	20
	179	9	2232-211-016-00	35	31	2232-302-006-00	42	9
2232-207-211-00	176	10		36	31	2232-302-210-00	42	1
	179	10	2232-211-017-00	35	18	2232-303-260-10	43	1
2232-207-212-00	176	11		36	18	2232-304-200-30	44	4
	179	11	2232-211-018-00	35	15	2232-310-001-30	45	1
2232-207-213-00	176	12		36	15		46	1
	179	12	2232-211-024-00	35	19	2232-310-002-10	45	16
2232-208-001-20	32	1		36	19		46	16
2232-208-001-40	32	1-A	2232-211-025-00	35	33	2232-310-004-00	45	46
2232-208-002-00	32	17		36	33	2232-310-005-00	45	12
2232-208-003-00	32	16	2232-211-025-10	35	33-A		46	12

Numerical Index

Part Code	Fig.	Key
2232-310-006-00	45	4
	46	4
2232-310-007-00	45	8
	46	8
2232-310-008-10	45	33
2232-310-009-00	45	27
2232-310-011-00	45	41
2232-310-012-10	45	42
	46	38
2232-310-013-10	45	35
	46	30
2232-310-015-00	45	34
	46	29
2232-310-018-00	45	14
	46	14
2232-310-019-00	45	15
	46	15
2232-310-031-00	45	38
	46	33
2232-310-032-00	45	39
	46	34
2232-310-033-00	45	40
	46	35
2232-310-200-00	45	49
	46	45
2232-310-210-00	45	50
	46	46
2232-310-301-00	45	20
2232-310-400-00	45	26
2232-316-200-00	47	1
2232-317-001-10	49	1
2232-320-700-00	51	1
2232-320-700-10	51	1-A
2232-320-750-00	50	1
2232-320-750-10	50	1-A
2232-321-200-20	52	1
2232-321-220-00	53	1
2232-321-220-10	53	1-A
2232-322-001-00	54	4
	54	7
2232-322-200-10	54	1
2232-322-210-40	54	2
2232-322-220-10	54	6
2232-322-230-20	54	9
	55	7

Part Code	Fig.	Key
2232-322-250-10	55	2
2232-322-300-00	55	1
2232-322-310-00	55	5
2232-325-001-00	56	1
2232-325-003-10	56	8
2232-325-004-00	56	1-A
2232-325-200-00	56	5
2232-325-200-10	56	5-A
2232-330-001-20	57	1
	58	1
	59	1
	60	1
2232-330-001-30	57	1-A
	58	1-A
	59	1-A
	60	1-A
2232-330-002-20	57	2
	58	2
	59	2
	60	2
2232-330-004-00	57	26
	58	26
	59	27
	60	27
2232-330-005-00	59	19
2232-330-006-00	57	8
	59	8
2232-330-012-00	57	31
	58	31
2232-330-013-10	57	14
	58	14
	59	14
	60	14
2232-330-015-00	57	19
	58	19
	59	20
	60	20
2232-330-016-10	57	21
	58	21
	59	22
	60	22
2232-330-017-00	57	22
	58	22
	59	23
	60	23

Part Code	Fig.	Key
2232-330-018-30	57	17
	58	17
2232-330-018-50	57	17-A
	58	17-A
	59	17
	60	17
2232-330-022-00	57	35
	58	35
	59	35
	60	35
2232-330-023-00	57	20
	58	20
	59	21
	60	21
2232-330-032-00	57	18
	58	18
	59	18
	60	18
2232-330-033-00	57	12
	58	12
	59	12
	60	12
2232-330-039-00	57	37
	58	37
2232-330-041-10	57	45
	58	45
2232-330-042-00	57	16
	58	16
	59	16
	60	16
2232-330-043-00	57	49
	58	49
2232-330-043-10	57	49-A
	58	49-A
	59	45
	60	45
2232-330-045-00	57	57
	58	57
	59	53
	60	53
2232-330-047-00	58	67
2232-330-048-00	57	67
2232-330-052-00	57	68
	58	68
2232-330-053-00	57	13

Part Code	Fig.	Key	Part Code	Fig.	Key	Part Code	Fig.	Key
2232-330-053-00	58	13	2232-414-210-00	70	3	2232-508-007-20	80	10
	59	13		71	3	2232-508-011-00	80	4
	60	13		72	2		81	4
2232-330-054-00	57	33		73	2	2232-508-012-00	80	5
	58	33	2232-414-300-00	71	1		81	5
2232-330-220-00	57	42	2232-415-001-00	70	10	2232-508-013-00	80	16
	58	42		71	10		81	16
	59	39	2232-415-002-00	72	4	2232-508-014-00	80	17
	60	39		73	4		81	17
2232-330-250-00	57	50	2232-415-003-10	72	10	2232-508-021-00	80	19
	59	46		73	10		81	19
2232-330-260-10	57	53	2232-415-003-20	72	10-A	2232-508-280-00	80	20
2232-330-260-20	57	53-A		73	10-A		81	20
	59	49	2232-415-200-00	72	1	2232-510-001-10	83	1
2232-330-260-30	57	53-B	2232-415-300-00	73	1		84	1
	59	49-A	2232-422-001-20	74	11	2232-510-002-10	83	3
2232-331-200-30	61	13	2232-422-002-00	74	19		84	3
2232-331-240-10	61	6	2232-422-024-00	74	13-A	2232-510-005-00	83	7
2232-331-240-20	61	6-A	2232-422-025-00	57	70		84	7
2232-331-250-20	61	1		58	70	2232-510-200-00	83	5
2232-331-250-30	61	1-A	2232-422-031-00	74	15		84	5
2232-331-300-00	61	10	2232-422-031-10	74	15-A	2232-512-001-10	85	1
2232-331-302-00	61	11	2232-422-200-10	74	1	2232-512-004-10	85	15
2232-336-001-00	62	20	2232-422-210-00	74	6	2232-512-006-00	85	13
2232-336-002-00	62	12	2232-422-230-10	74	12	2232-513-001-10	87	33
2232-336-003-00	62	24	2232-422-230-20	74	12-A	2232-513-004-00	87	45
2232-336-005-00	62	9	2232-422-230-30	74	12-B	2232-513-007-00	87	34
2232-336-200-20	62	21	2232-422-270-10	74	16	2232-513-008-00	87	13
2232-336-250-20	62	1	2232-435-001-00	75	3		88	13
2232-336-260-00	62	3	2232-435-003-00	75	5	2232-513-009-00	87	50
2232-343-200-20	63	1	2232-435-004-00	75	11	2232-513-011-00	87	43
2232-401-001-00	64	7	2232-501-003-00	78	4	2232-513-200-00	87	29
2232-407-200-20	65	1	2232-501-004-10	78	5	2232-513-240-00	88	29
2232-407-210-00	65	3	2232-501-032-00	78	2	2232-513-300-30	87	37
2232-409-001-10	66	7	2232-501-200-40	78	1	2232-513-320-00	87	44
2232-409-004-10	66	10	2232-501-200-50	78	1-A	2232-513-400-00	87	47
2232-409-007-00	66	4	2232-507-001-00	79	1	2232-514-200-30	90	1
2232-409-007-10	66	4-A	2232-507-001-10	79	1-A		91	1
2232-409-200-00	66	1	2232-508-001-10	80	1	2232-514-220-00	92	1
2232-411-001-00	67	3		81	1		93	1
	68	3	2232-508-003-00	80	8	2232-514-220-10	92	1-A
2232-411-200-00	67	1		80	11		93	1-A
2232-411-300-00	68	1		81	8	2232-514-230-10	92	2
2232-413-300-00	69	1		81	11	2232-514-230-20	92	2-A
2232-414-200-20	70	1	2232-508-006-20	80	7	2232-514-240-00	92	17

Numerical Index

Part Code	Fig.	Key	Part Code	Fig.	Key	Part Code	Fig.	Key
2232-514-240-00	93	17	2232-536-012-10	100	39-A	2232-537-903-00	103	8-A
2232-514-250-00	92	11		101	39	2232-537-903-10	106	7
	93	11		102	39	2232-537-904-00	103	14-A
2232-514-300-20	90	4	2232-536-250-00	99	12		104	11
2232-514-400-00	93	2		100	12		105	14-A
2232-514-400-10	93	2-A		101	12		106	12
2232-514-400-20	93	2-B		102	12	2232-537-920-00	103	17-A
2232-517-001-00	95	8	2232-536-290-00	99	24		105	15-A
2232-517-200-00	95	1		100	25	2232-537-920-20	103	17-B
2232-528-001-00	97	1		101	25		105	15-B
2232-528-004-00	97	2		102	25	2232-537-930-10	105	1-A
2232-532-004-00	98	6	2232-536-300-00	99	1	2232-537-930-30	105	1-B
2232-532-005-00	98	7		100	1	2232-537-931-10	104	7
2232-532-200-00	98	1	2232-536-300-10	99	1-A		105	8-A
2232-536-001-10	99	26		100	1-A	2232-537-950-00	105	17-A
	100	27		101	1	2232-537-951-00	105	20-A
	101	27		102	1	2232-537-960-00	103	19
	102	27	2232-536-330-00	99	11		105	16
2232-536-002-00	99	27		100	11	2232-538-211-00	105	8
	100	28		101	11	2232-541-001-00	108	5
	101	28		102	11	2232-541-200-00	108	1
	102	28	2232-537-200-40	103	1	2232-541-210-00	108	1-A
2232-536-003-10	99	7	2232-537-201-10	103	15	2232-541-220-00	108	2
	100	7	2232-537-203-10	103	8		109	2
	101	7	2232-537-204-00	103	14	2232-545-200-70	110	1
	102	7		105	14	2232-545-210-10	110	1-A
2232-536-006-00	99	30	2232-537-220-20	103	17	2232-545-400-00	110	1-B
	100	31		105	15	2232-545-400-10	110	1-C
	101	31	2232-537-240-00	103	22	2232-545-400-20	110	1-D
	102	31		106	18	2232-545-400-40	110	1-E
2232-536-007-00	99	5	2232-537-610-10	106	1	2232-545-400-50	110	1-F
	100	5	2232-537-610-30	106	1-A	2232-546-001-00	111	5
	101	5	2232-537-630-00	104	12	2232-546-200-20	111	1
	102	5		106	14	2232-546-210-10	111	3
2232-536-008-00	99	6	2232-537-630-20	104	12-A	2232-546-210-20	111	3-A
	100	6		106	14-A	2232-546-300-00	111	1-A
	101	6	2232-537-640-10	104	1	2232-556-001-00	112	16
	102	6	2232-537-640-30	104	1-A	2232-556-005-30	112	1
2232-536-011-00	99	31	2232-537-660-00	104	13	2232-556-007-00	112	32
	100	32	2232-537-661-00	104	16	2232-556-011-10	112	24
	101	32	2232-537-700-00	105	1	2232-556-012-10	112	25
	102	32	2232-537-900-10	103	1-A	2232-556-012-20	112	25-A
2232-536-012-00	99	38	2232-537-900-30	103	1-B	2232-556-013-10	112	26
	100	39	2232-537-901-00	103	15-A	2232-556-022-00	112	27
2232-536-012-10	99	38-A		106	13	2232-556-023-10	112	6

Part Code	Fig.	Key
2232-556-024-00	112	10
2232-556-032-00	42	17
	112	22
2232-556-042-00	112	25-B
2232-556-210-00	112	9
2232-556-230-00	42	16
	112	21
2232-556-260-00	112	19
2232-556-270-10	112	13
2232-556-280-10	112	14
2232-556-290-10	112	15
2232-556-320-10	112	5
2232-581-001-00	113	4
2232-581-005-00	70	8-A
	71	8-A
2232-581-200-10	113	1
2232-581-230-00	113	5
2232-582-003-00	114	11
2232-582-008-00	114	16
2232-582-009-00	114	9
2232-582-011-00	114	17
2232-582-200-00	114	6
2232-583-001-00	115	18
2232-583-002-10	115	41
2232-583-003-10	115	23
2232-583-004-00	115	40
2232-583-005-00	74	2
	115	2
2232-583-008-10	115	29
2232-583-009-00	115	35
2232-583-016-00	115	21
2232-583-016-10	115	21-A
2232-583-200-20	115	1
2232-583-210-10	115	9
2232-583-220-00	115	14
2232-583-220-10	115	14-A
2232-583-240-00	115	17
2232-583-240-10	115	17-A
2232-583-280-10	115	33
2232-601-001-00	117	6-A
2232-601-002-00	117	8-A
2232-601-200-10	117	1
2232-601-210-40	117	2
2232-603-002-00	115	20
	121	8

Part Code	Fig.	Key
2232-603-002-00	122	8
	123	7
	124	6
	138	4
	141	4
2232-603-002-10	115	20-A
	121	8-A
	122	8-A
	123	7-A
	124	6-A
	138	4-A
	141	4-A
	142	4
2232-603-003-00	115	19
	121	7
	122	7
	123	6
	124	5
	138	3
	141	5
2232-603-003-10	115	19-A
	121	7-A
	122	7-A
	123	6-A
	124	5-A
	138	3-A
	141	5-A
	142	5
2232-603-004-00	119	1
2232-603-011-00	119	3-A
2232-603-012-00	119	3-B
2232-603-200-10	119	2
2232-603-200-40	119	2-A
2232-605-006-10	120	18
2232-605-006-20	120	18-A
2232-605-007-00	120	1
2232-605-007-10	120	1-A
2232-605-008-00	120	5
2232-605-010-00	120	16
2232-605-010-10	120	16-A
2232-605-011-00	120	13
2232-605-011-10	120	13-A
2232-605-012-00	120	11
2232-605-012-10	120	11-A
2232-605-016-00	120	24

Part Code	Fig.	Key
2232-605-016-20	120	24-A
2232-605-017-00	120	2-A
2232-605-210-30	120	4
2232-605-210-40	120	4-A
2232-605-230-20	120	8
2232-605-230-30	120	8-A
2232-605-230-40	120	8-B
2232-605-240-00	120	7
2232-605-240-10	120	7-A
2232-607-001-10	121	1
	122	1
2232-607-001-20	121	1-A
	122	1-A
2232-607-001-30	121	1-B
	122	1-B
2232-607-002-00	121	2
	122	2
2232-607-003-10	121	9
2232-607-004-00	121	15
	122	18
2232-607-005-20	121	20
	122	23
2232-607-008-00	121	23
	122	26
2232-607-009-00	121	24
	122	27
2232-607-011-00	121	25
	122	28
2232-607-012-00	121	37
	122	40
2232-607-014-00	121	43
	122	46
2232-607-015-00	121	44
	122	47
2232-607-016-00	121	45
	122	48
2232-607-017-10	121	47
	122	50
2232-607-018-00	121	49
	122	52
2232-607-019-10	121	16
2232-607-020-00	121	41
	122	44
2232-607-027-00	121	14
	122	15

Numerical Index

Part Code	Fig.	Key
2232-607-028-00	122	19
2232-607-029-10	122	10
2232-607-031-00	121	57
	122	60
2232-607-210-00	121	29
	122	32
2232-607-230-00	121	55
	122	58
2232-607-230-10	121	55-A
	122	58-A
2232-607-240-00	121	29-A
	122	32-A
2232-608-001-00	123	8
2232-608-005-20	123	4
	124	3
2232-608-006-00	123	1
2232-608-007-00	123	9
2232-608-008-00	123	14
2232-608-009-00	123	17
2232-608-010-00	123	11
2232-608-010-10	123	11-A
2232-608-014-00	123	10
2232-608-018-00	123	2
2232-608-021-00	123	12-A
2232-612-200-00	124	1
2232-612-200-10	124	1-A
2232-614-001-00	125	2
2232-614-003-00	125	4
2232-614-200-30	125	1
2232-614-210-00	125	5
2232-616-001-00	126	1
2232-616-200-00	126	4
2232-616-200-10	126	4-A
2232-616-220-10	126	2
2232-616-220-20	126	2-A
2232-616-230-00	126	5
2232-616-230-10	126	5-A
2232-617-002-00	127	3
2232-618-004-00	128	16
2232-618-220-00	128	6
2232-619-002-00	129	2
2232-619-003-20	129	7
2232-619-240-00	129	1
2232-619-260-10	129	5
2232-645-006-10	130	39

Part Code	Fig.	Key
2232-645-007-00	130	15
	131	15
2232-645-007-10	130	15-A
	131	15-A
2232-645-011-10	130	9
	131	9
2232-645-012-00	130	24
2232-645-013-00	130	12
	131	12
2232-645-014-20	130	27
	131	27
2232-645-015-10	130	7
	131	7
2232-645-016-00	130	29
	131	29
2232-645-017-00	130	28
	131	28
2232-645-018-00	130	13
	131	13
2232-645-019-10	130	65
	131	64
2232-645-021-00	132	22
	133	9
	133	17
	133	22
	133	28
	133	33
	134	18
	134	34
	135	86
2232-645-022-00	130	2
	131	2
	134	16
	135	73
2232-645-023-00	115	22-A
	130	14
	131	14
	133	37
	133	46
	134	13
2232-645-025-00	130	30
	130	37
	130	48
	131	30
2232-645-026-00	130	26

Part Code	Fig.	Key
2232-645-026-00	130	38
2232-645-310-00	130	59
	131	58
2232-645-320-40	130	1
2232-645-330-00	130	36
2232-645-350-00	130	44
2232-645-420-00	130	33
	131	33
2232-646-210-00	130	56
	131	55
2232-651-002-00	132	4
2232-651-003-00	132	7
2232-651-004-00	132	15
2232-652-210-00	132	1
2232-652-230-00	132	2
2232-655-001-00	133	5
2232-655-002-00	133	2
2232-655-003-00	133	6
2232-655-004-00	133	12
2232-655-006-00	133	15
2232-655-006-10	133	15-A
2232-655-007-00	133	16
2232-655-008-00	133	4
2232-655-009-00	133	23
2232-655-010-10	133	25
2232-655-011-10	133	30
2232-655-012-00	133	27
2232-655-012-10	133	27-A
2232-655-015-00	133	13
2232-655-016-00	133	14
2232-655-260-10	133	21
2232-655-500-10	169	2
2232-656-005-10	133	1
2232-656-020-00	133	18
2232-656-021-00	133	36
2232-656-022-00	133	32
2232-656-400-00	133	31
2232-665-001-10	134	12
2232-665-005-10	134	32
2232-665-008-00	134	37-A
2232-665-500-10	133	7
2232-665-510-00	134	28
2232-665-510-10	134	28-A
2232-665-600-00	134	36-A
2232-666-001-20	134	33

Part Code	Fig.	Key	Part Code	Fig.	Key	Part Code	Fig.	Key
2232-666-001-30	134	33-A	2232-675-217-00	135	51	2232-676-310-20	135	88-A
2232-666-003-00	134	36	2232-675-218-00	135	20	2232-676-510-00	135	99
2232-666-005-00	134	40		135	56	2232-676-520-00	135	97
2232-666-250-40	134	1	2232-675-220-00	135	7	2232-676-530-00	135	98
2232-672-007-00	137	3		135	43	2232-685-002-00	136	7
2232-672-008-10	137	4	2232-675-230-00	135	85	2232-686-001-10	177	1
2232-675-001-00	135	93	2232-675-230-10	135	85-A		178	1
2232-675-001-10	135	93-A	2232-675-240-00	135	7-A	2232-686-002-10	177	2
2232-675-002-00	135	94		135	43-A		178	2
2232-675-002-10	135	94-A	2232-675-251-00	135	5-A	2232-686-004-10	177	21
2232-675-004-00	135	77		135	30-A	2232-686-004-20	177	21-A
2232-675-006-00	135	79		135	41-A		178	21
2232-675-007-00	135	81		135	66-A	2232-686-009-10	177	15
2232-675-008-00	135	80	2232-675-252-00	135	32-A		178	15
2232-675-021-00	137	11		135	68-A	2232-686-010-00	177	38
2232-675-022-00	137	12	2232-675-253-00	135	33-A	2232-686-010-10	178	38
2232-675-023-00	137	13		135	69-A	2232-686-010-20	178	38-A
2232-675-024-00	137	14	2232-675-254-00	135	11	2232-686-011-10	177	5
2232-675-201-00	135	1		135	47	2232-686-011-20	178	5
	135	37	2232-675-255-00	135	13	2232-686-011-30	178	5-A
2232-675-202-00	135	2		135	49	2232-686-012-10	177	24
	135	38	2232-675-256-00	135	14		178	24
2232-675-202-10	135	2-A		135	50	2232-686-013-20	177	22
	135	38-A	2232-675-257-00	135	17		178	22
2232-675-204-00	135	24		135	53	2232-686-016-00	177	13
	135	60	2232-675-258-00	135	19		178	13
2232-675-205-00	135	8		135	55	2232-686-017-20	177	25
	135	44	2232-675-258-10	135	19-A		178	25
2232-675-207-00	135	28		135	55-A	2232-686-019-20	177	26
	135	64	2232-675-259-00	135	3-A		178	26
2232-675-209-00	135	34		135	39-A	2232-686-020-30	177	27
	135	70	2232-675-261-00	135	16	2232-686-020-40	177	27-A
2232-675-209-10	135	34-A		135	52	2232-686-020-60	177	27-B
	135	70-A	2232-675-270-00	135	10-A		178	27
2232-675-211-00	135	36		135	46-A	2232-686-020-70	178	27-A
	135	72	2232-676-001-10	135	75	2232-686-021-30	177	28
2232-675-211-10	135	36-A	2232-676-003-00	135	76		178	28
	135	72-A	2232-676-031-10	135	89	2232-686-023-10	177	29
2232-675-212-10	135	9	2232-676-031-20	135	89-A	2232-686-023-20	177	29-A
	135	45	2232-676-032-00	135	91		178	29
2232-675-213-00	135	4	2232-676-035-00	135	90-A	2232-686-024-00	177	9
	135	40	2232-676-210-00	130	51		178	9
2232-675-214-00	135	35	2232-676-300-10	135	87	2232-686-210-20	136	2
2232-675-215-00	135	71	2232-676-300-20	135	87-A	2232-686-250-40	136	1
2232-675-217-00	135	15	2232-676-310-10	135	88	2232-686-250-90	136	1-A

Numerical Index

Part Code	Fig.	Key	Part Code	Fig.	Key	Part Code	Fig.	Key
2232-686-260-10	177	3	2232-701-067-00	138	46-A	2232-706-210-00	143	4
2232-686-260-20	177	3-A		138	46-B	2232-710-012-00	144	1
2232-686-260-40	177	3-B	2232-701-068-00	138	30-A	2232-710-017-10	144	6
	178	3	2232-701-220-20	138	42	2232-710-260-00	144	2
2232-686-260-50	178	3-A		138	42-A	2232-710-260-10	144	2-A
2232-686-260-60	178	3-B	2232-701-220-30	138	42-B	2232-711-001-00	145	25
2232-686-270-40	136	1-B		138	42-C	2232-711-001-10	145	25-A
2232-686-270-50	136	1-C	2232-701-220-40	138	42-D		146	25
2232-686-300-10	132	21	2232-701-260-30	138	43	2232-711-002-00	145	26
2232-687-007-00	178	6	2232-701-260-40	138	43-A	2232-711-002-10	145	26-A
2232-691-054-00	137	23	2232-701-270-00	138	47		146	26
2232-691-054-10	137	23-A	2232-701-270-10	138	47-A	2232-711-003-00	145	17
2232-691-055-00	137	25	2232-701-310-00	138	7	2232-711-003-10	145	17-A
2232-691-055-10	137	25-A	2232-701-330-00	138	10		146	17
2232-691-057-10	137	6	2232-701-350-00	138	13	2232-711-004-00	145	18
2232-691-057-20	137	6-A	2232-702-001-00	139	1	2232-711-004-10	145	18-A
2232-691-300-00	137	7-A	2232-702-001-10	139	1-A		146	18
2232-691-300-10	137	7-B	2232-702-002-00	139	2	2232-711-005-00	145	3
2232-692-004-00	137	16	2232-702-002-10	139	2-A		146	3
2232-692-005-00	137	17	2232-702-003-00	121	52	2232-711-007-00	145	9
2232-692-006-10	137	9		122	55		146	9
2232-692-220-20	134	14		123	3	2232-711-008-00	145	10
2232-692-250-00	134	15	2232-702-007-00	139	4		146	10
2232-692-260-00	134	17	2232-703-200-00	140	1	2232-711-011-00	145	22
2232-696-002-00	137	8	2232-705-001-10	141	12		146	22
2232-696-100-10	133	43		142	12	2232-711-013-00	145	27
2232-696-110-10	133	44	2232-705-002-10	141	13		146	27
2232-696-120-10	133	45		142	13	2232-711-014-00	145	8
2232-696-300-00	137	15	2232-705-004-00	141	15		146	8
2232-696-400-00	137	2		142	15	2232-711-017-00	146	28
2232-701-001-10	138	1	2232-705-011-00	141	17-A	2232-711-200-10	145	11
2232-701-001-30	138	1-A		142	17	2232-711-200-20	145	11-A
2232-701-002-00	138	19	2232-705-012-00	127	6		146	11
2232-701-003-00	138	34	2232-705-200-30	141	1	2232-711-210-10	145	12
2232-701-004-00	138	32		142	1	2232-711-210-20	145	12-A
2232-701-006-10	138	27	2232-705-220-30	141	2		146	12
2232-701-012-00	138	48		142	2	2232-711-220-40	145	14
2232-701-012-20	138	48-A	2232-705-230-10	141	9	2232-711-220-50	145	14-A
2232-701-013-10	138	49		142	9		146	14
2232-701-017-00	138	26	2232-705-240-20	141	6	2232-711-230-40	145	15
2232-701-022-30	138	33		142	6	2232-711-230-50	145	15-A
2232-701-024-00	138	45	2232-705-250-00	141	3		146	15
2232-701-024-10	138	45-A		142	3	2232-711-240-20	145	1
	138	45-B	2232-705-290-00	137	30		146	1
2232-701-024-20	138	45-C	2232-706-200-00	143	1	2232-711-250-20	145	2

Part Code	Fig.	Key
2232-711-250-20	146	2
2232-711-270-00	19	23
	20	23
	145	20
	146	20
2232-713-002-00	147	3
2232-713-200-10	147	1
2232-713-200-20	147	1-A
2232-713-200-30	147	1-B
2232-713-210-10	147	2
2232-713-210-20	147	2-A
2232-713-210-30	147	2-B
2232-738-304-00	174	9
	175	9
2232-801-001-00	150	13
2232-801-003-00	150	17
2232-801-005-00	150	33
2232-801-006-00	150	24
2232-801-220-00	150	12
2232-801-250-00	150	1
2232-801-251-00	150	11
2232-801-260-00	150	5
2232-802-051-00	151	6
2232-802-052-00	151	7
2232-803-001-00	152	6
2232-803-003-00	152	4
2232-803-210-00	152	3
2232-803-220-00	152	2
2232-803-320-00	152	1
2232-804-001-00	153	7
2232-804-002-00	153	13
	154	1
2232-804-400-00	153	4
2232-805-001-00	155	16
2232-805-002-00	155	17
2232-805-003-00	155	21
2232-805-004-00	155	43
2232-805-005-10	155	41
2232-805-006-00	155	12
2232-805-007-00	155	44
2232-805-008-00	155	11
2232-805-010-10	155	33
2232-805-011-10	155	7
2232-805-013-20	155	2
2232-805-014-20	155	49

Part Code	Fig.	Key
2232-805-020-00	155	13
2232-805-020-10	155	13-A
2232-805-021-00	155	3
2232-805-022-10	155	4
2232-805-023-00	155	45
2232-805-024-00	155	32
2232-805-025-10	155	42
2232-805-028-00	155	6
2232-805-029-00	155	5
2232-805-051-10	155	46
2232-805-056-00	155	47
2232-805-057-20	155	48
2232-805-065-00	155	48-A
2232-805-200-10	155	1
2232-805-210-00	155	8
2232-805-220-20	155	30
2232-805-230-20	155	31
2232-806-001-10	156	1
2232-807-001-00	157	3
2232-807-002-00	157	6
2232-807-200-10	157	1
2232-901-031-00	158	15
	159	14
	160	14
	161	15
2232-901-032-00	158	16
	159	15
	160	15
	161	16
2232-901-033-00	158	17
	159	16
	160	16
	161	17
2232-901-034-00	160	17
	161	18
2232-901-035-00	160	18
	161	19
2232-901-036-00	160	19
	161	20
2232-901-037-00	168	16
2232-912-003-00	162	1
	163	1
	164	1
	165	1
2232-912-004-00	162	2

Part Code	Fig.	Key
2232-912-004-00	163	2
	164	2
	165	2
2232-912-006-00	162	6
	163	7
	164	6
	165	7
2232-912-021-00	162	7
	163	8
2232-912-021-10	162	7-A
	163	8-A
	164	7
	165	8
2232-912-023-00	14	4
	15	4
2232-912-025-00	3	52
2232-912-026-00	3	53
2232-912-027-00	162	3
	163	4
	164	3
	165	4
2232-912-028-00	100	24
2232-912-037-00	164	20
	165	19
2232-912-038-00	164	21
	165	20
2232-912-039-00	168	15
2232-912-041-00	100	8
	101	8
2232-912-042-00	99	8
	102	8
2232-912-043-00	99	9
	100	9
2232-912-044-00	99	10
	100	10
	101	10
	102	10
2232-912-045-00	99	13
	100	13
	101	13
	102	13
2232-912-046-00	162	8
	163	9
	164	8
	165	9

Numerical Index

Part Code	Fig.	Key	Part Code	Fig.	Key	Part Code	Fig.	Key
2232-912-047-00	162	12	2232-926-059-00	167	13	2233-211-200-10	36	3
	163	13		168	13	2233-211-200-20	36	3-A
	164	12	2233-101-004-00	4	13	2233-222-200-20	40	1
	165	13	2233-101-005-00	4	14	2233-222-210-20	40	2
2232-912-048-00	162	13	2233-101-005-10	4	14-A	2233-310-002-00	46	42
	163	14	2233-101-006-00	4	24	2233-310-007-00	46	36
	164	13	2233-101-007-00	2	15	2233-310-008-00	46	28
	165	14	2233-101-007-10	2	15-A	2233-310-011-00	46	21
2232-912-049-00	101	9	2233-101-500-00	2	11	2233-310-013-00	46	26
	102	9	2233-101-500-10	2	11-A	2233-310-014-10	46	37
2232-912-054-00	162	4	2233-102-008-00	4	44	2233-310-400-00	46	20
	163	5	2233-102-220-10	4	9	2233-316-200-10	48	1
	164	4	2233-102-230-00	4	8	2233-330-004-10	60	8
	165	5	2233-102-250-00	4	18	2233-330-005-10	58	8
2232-912-058-00	162	9	2233-102-250-30	4	18-A		60	19
	163	10	2233-102-350-00	4	42	2233-330-051-00	57	46
	164	9	2233-102-350-20	4	42-A		58	46
	165	10	2233-102-350-30	4	42-B		59	42
2232-912-059-00	162	10	2233-105-003-00	8	1		60	42
	163	11	2233-105-004-10	8	4	2233-330-053-00	57	31-A
	164	10	2233-106-200-10	10	4		58	31-A
	165	11	2233-106-210-20	10	1	2233-330-200-10	58	50
2232-925-021-00	166	1	2233-124-004-00	15	21		60	46
2232-925-021-10	166	1-A	2233-124-005-00	15	23	2233-330-230-10	58	53
2232-925-022-00	166	2	2233-124-005-10	15	23-A		60	49
2232-926-009-00	167	2	2233-124-300-00	15	11	2233-330-230-20	58	53-A
	168	2	2233-131-002-00	18	9		60	49-A
2232-926-011-00	167	11	2233-131-004-00	18	11	2233-435-200-00	75	1
	168	11	2233-131-006-00	18	23	2233-435-200-10	75	1-A
2232-926-051-00	167	1	2233-131-007-00	18	15	2233-501-063-10	78	8
	168	1	2233-131-007-10	18	15-A	2233-508-001-00	81	7
2232-926-052-00	167	3	2233-131-200-00	18	17	2233-508-002-00	81	10
	168	3	2233-132-200-00	20	31	2233-509-280-00	82	1
2232-926-053-00	167	4	2233-137-008-00	22	1	2233-510-008-00	84	8
	168	4	2233-137-200-00	22	4	2233-512-001-00	86	1
2232-926-054-00	167	5	2233-137-200-10	22	4-A	2233-512-002-00	86	14
	168	5	2233-137-220-00	22	2	2233-512-004-00	86	11
2232-926-055-00	167	6	2233-202-200-00	25	1	2233-512-005-00	86	7
	168	6	2233-203-200-00	27	1	2233-514-320-10	91	4
2232-926-056-00	167	9	2233-204-001-00	29	4	2233-524-200-00	96	1
	168	9	2233-207-250-00	31	5	2233-537-230-00	105	17
2232-926-057-00	167	10	2233-207-250-20	31	5-A	2233-537-231-00	105	20
	168	10	2233-207-250-30	31	5-B	2233-541-001-00	109	5
2232-926-058-00	167	12	2233-207-251-00	179	1	2233-541-300-00	109	1
	168	12	2233-209-001-00	34	8	2233-581-001-00	57	62

Part Code	Fig.	Key
2233-581-001-00	58	62
	59	59
	60	59
2233-581-001-20	57	62-A
	58	62-A
	59	59-A
	60	59-A
2233-581-002-00	113	14
2233-581-200-00	113	11
2233-581-200-10	113	11-A
2233-581-210-00	113	12
2233-601-310-00	117	9
2233-648-001-00	131	26
	131	37
	131	47
2233-648-006-00	131	38
2233-648-006-10	131	38-A
2233-648-012-00	131	24
2233-648-320-00	131	1
2233-648-330-00	131	36
2233-648-350-00	131	43
2233-678-004-00	135	101
2233-678-200-00	135	100
2233-678-200-10	135	100-A
2233-678-220-00	131	50
2233-912-002-00	163	3
	165	3
2500-907-017-00	12	9
2505-111-003-00	103	19-A
	104	27
	105	31
	106	15
2512-501-240-00	64	3
2512-665-220-00	99	14
	100	14
	101	15
	102	15
2513-801-042-00	132	8
2515-665-210-00	99	37
	100	38
	101	38
	102	38
2703-501-006-00	174	10
	175	10
2703-501-008-00	174	12
2703-501-008-00	175	12
2798-102-002-00	90	12
	91	12
	92	9
	93	9
3103-210-051-00	16	2
3505-704-003-00	95	7
	126	8
	144	5
3511-203-005-00	19	30
	20	30
3533-306-001-00	94	6
	99	4-A
	100	4-A
	101	4
	102	4
3533-901-012-00	78	3
3555-404-008-00	121	22
	122	25
3560-203-002-00	19	36
	19	36-A
	20	35
	20	35-A
3560-503-302-00	2	18
	3	12
	57	47
	58	47
	59	43
	60	43
	62	17
	137	32
	138	46
	145	5
	146	5
	155	40
3565-403-008-00	121	21
	122	24
3621-211-002-00	7	6
	9	6
3623-150-003-10	2	6
3623-263-001-00	104	21
	105	25
3632-360-036-00	140	11
3640-260-200-30	4	12
	108	6
3640-260-200-30	109	6
	140	4
3640-547-007-00	138	2
3646-102-011-10	135	78
3650-212-001-00	14	16
	15	16
3650-261-221-00	103	11
	105	11
3650-375-200-00	66	9
3652-273-002-00	99	17
	100	17
	101	18
	102	18
3656-223-011-00	144	4
3656-260-200-30	109	4
3656-302-009-10	2	7
3659-215-003-00	87	39
3659-301-001-00	2	12
3659-836-002-00	111	7
3676-374-310-00	66	8
3737-154-003-00	85	12
	86	13
3737-211-007-00	138	25
3737-314-003-00	10	9
3740-314-017-00	56	6
	138	5
3747-155-013-10	14	15
	15	15
3747-342-002-00	74	7
	115	10
3750-231-013-00	148	25
	149	25
3750-251-023-00	122	17
3768-185-014-10	75	12
3768-185-022-10	65	5
	75	11-A
3801-109-222-00	28	8
	29	8
3801-109-223-00	28	9
	29	9
3805-301-320-00	4	26
3805-301-320-10	4	26-A
3805-301-321-00	4	37
3805-354-280-00	64	5
3807-836-350-00	14	29

Numerical Index

Part Code	Fig.	Key
3807-836-350-00	15	29
	16	12
	38	16
	133	38
	157	7
3807-836-400-00	14	30
	15	30
	16	13
	38	17
	133	39
	157	8
3817-493-005-00	112	11
3821-262-202-00	103	4
	104	4
	105	4
	106	4
3821-262-204-00	103	5
	103	5-A
	104	5
	105	5
	105	5-A
	106	5
3822-330-601-00	3	23
3824-247-202-00	103	3
	104	3
	105	3
	105	3-A
	106	3
3824-247-203-00	105	6
3827-270-203-00	103	6
3829-260-303-00	104	14
	105	18
3829-905-001-00	158	9
	161	9
3829-905-052-00	167	8
	168	8
3830-311-210-00	12	21
	13	15
3838-620-002-00	38	11
3841-277-300-00	103	12
	103	12-A
	104	9
	105	12
	105	12-A
	106	10
3841-277-300-10	103	12-B
	104	9-A
	105	12-B
	106	10-A
3843-271-210-00	99	32
	100	33
3843-271-210-10	99	32-A
	100	33-A
	101	33
	102	33
3849-270-402-00	99	19
	100	19
	101	20
	102	20
3849-270-403-00	99	20
	100	20
	101	21
	102	21
3864-225-001-00	14	14
	15	14
3872-301-301-00	4	27
3872-301-302-00	4	30
3872-301-303-00	4	32
3885-741-235-00	80	3
	81	3
3888-218-001-00	112	4
	145	21
	146	21
3888-281-200-00	30	16
	31	17
3888-726-001-00	19	24
	20	24
	74	5
3888-726-200-00	74	4
	112	3
	145	19
	146	19
3908-170-020-00	12	2
	13	2
	21	7
	22	6
	80	15
	81	15
	89	7
	90	10
3908-170-020-00	91	10
	92	7
	93	7
3922-420-211-00	139	3
3924-312-003-00	130	25
	131	25
4106-102-028-00	2	20
	10	6
	74	17
4132-303-003-00	3	31
4512-106-005-00	96	4
6219-755-001-00	12	22
	13	16
6221-408-003-00	4	40
6221-408-007-00	4	34
	4	39
6221-408-008-00	4	28
6221-408-009-00	4	29
	4	35
6221-408-010-00	4	36
6221-408-011-00	4	31
	4	38
6221-408-013-00	4	33
7827-205-010-00	115	28
7932-201-002-00	45	28
	45	29
	46	22
	46	23
7954-205-100-00	23	7-A
7954-205-101-00	23	7
7957-405-003-00	128	2
	134	30
8595-201-025-00	35	25
	36	25
	42	13
8664-305-201-00	28	3
	29	3
8836-102-002-00	5	4
8836-103-002-00	5	10
8836-502-203-00	132	20
8836-506-005-00	134	3
8836-508-001-00	134	2
8836-601-011-00	132	5
8836-602-005-10	137	24
8836-602-006-10	137	26

Part Code	Fig.	Key	Part Code	Fig.	Key	Part Code	Fig.	Key
8836-703-055-00	112	7	8842-705-211-10	135	69	8844-906-006-00	168	14
	130	11	8842-705-214-10	135	10	8845-724-270-00	137	8-A
	131	11		135	46	8849-001-200-00	170	3
	135	83-A	8842-705-215-00	135	22		171	2
8836-706-006-10	137	5		135	58	J061-120-032-00	3	33
8836-730-215-00	177	11	8842-705-216-00	135	23		66	6
	177	37		135	59	J061-123-035-00	4	16
	178	11	8842-705-218-00	135	26	J061-132-050-00	3	50
8836-730-216-00	177	20		135	62		123	15
	178	20	8842-705-219-00	135	27	J061-145-060-10	3	51-A
8841-101-300-00	5	6		135	63		123	16
8841-511-201-00	103	16	8842-705-223-00	135	3	J061-236-044-00	4	17
8841-536-011-00	135	31		135	39	J061-238-046-00	4	17-A
	135	67	8842-705-224-00	135	25	J061-249-060-00	4	25
8841-536-018-00	135	104		135	61	J062-104-111-00	23	23
8841-716-008-10	177	6-A	8842-905-042-00	167	7	J062-111-120-00	3	14
8841-716-009-00	177	7		168	7		13	21
	177	10	8842-919-002-10	169	1	J062-119-126-00	13	19
	178	7	8843-404-006-00	130	20		66	11
	178	10		131	20	J062-126-134-00	12	12-A
8841-716-011-00	177	19	8843-404-006-10	130	20-A		12	16
	178	19		131	20-A		13	12
8841-718-002-00	177	6	8843-404-009-00	130	19	J062-138-148-00	12	24
8841-725-002-00	155	24		131	19	J062-147-159-00	12	12
8842-505-007-00	133	3	8843-514-300-00	133	20	K200-269-000-00	75	2
8842-505-019-00	133	11	8843-534-002-00	133	17-A	K250-083-000-00	75	13
8842-505-032-00	133	10	8843-624-004-00	134	31	K270-012-103-00	69	4
8842-505-035-00	133	8	8843-624-205-00	134	20	K275-001-003-00	172	36
8842-515-015-00	133	19	8843-704-004-00	130	47		173	26
8842-515-022-00	135	82		131	46	K500-001-023-00	173	22
8842-535-250-10	132	10	8843-704-005-00	130	53	K510-001-007-00	172	12
8842-605-004-10	136	6		131	52		173	5
8842-625-004-00	134	27	8843-704-251-00	130	52	K510-001-010-00	173	8
8842-625-400-20	134	19		131	51	K510-001-011-00	173	9
8842-625-404-00	134	24	8844-101-001-00	5	17	K510-001-013-20	173	11
8842-625-405-00	134	25	8844-101-002-10	5	15	K510-001-015-00	173	13
8842-625-406-00	134	26	8844-405-028-00	130	21	K510-001-016-00	173	15
8842-625-408-00	134	22		131	21	K510-001-017-00	172	27
8842-625-409-00	134	21	8844-535-002-00	132	6		173	16
8842-705-018-00	135	83	8844-725-310-10	137	7	K510-001-018-00	172	28
8842-705-032-00	135	30	8844-726-220-00	137	1		173	17
	135	66	8844-745-013-00	137	22	K510-001-019-00	173	18
8842-705-208-00	135	32	8844-746-007-00	137	29	K510-001-020-00	172	29
	135	68	8844-746-008-00	137	19-A		173	19
8842-705-211-10	135	33	8844-906-006-00	167	14	K510-001-024-00	173	23

Numerical Index

Part Code	Fig.	Key
K510-001-026-00	172	34
	173	24
K510-001-029-00	172	35
	173	25
K510-001-031-00	172	43
	173	33
K510-001-034-00	173	42
K510-001-036-00	172	49
	173	40
K510-001-039-00	173	32
K510-003-021-00	172	30
	173	20
K510-003-022-00	172	31
	173	21
K510-003-037-00	172	25
	173	43
K510-006-008-00	173	6
K510-006-012-30	173	10
K510-006-014-00	172	23
	173	12
K510-006-015-00	172	24
K510-010-006-10	173	4
K510-010-009-00	173	7
K510-017-001-00	172	1
K510-017-047-00	172	46
	173	36
K510-017-048-00	172	47
	173	37
K510-019-005-10	173	3
K510-021-000-20	17	1
K510-021-004-00	172	2
K510-021-006-00	172	11
K510-021-010-00	172	13
K510-021-011-00	172	14
K510-021-012-00	172	16
K510-021-013-00	172	20
K510-021-016-10	172	26
K510-021-023-00	172	32
K510-021-024-00	172	33
K510-021-030-00	172	42
K510-021-300-00	172	3
K510-021-301-00	172	4
K510-021-302-00	172	5
K510-021-303-00	172	6
K510-021-304-00	172	7

Part Code	Fig.	Key
K510-021-305-00	172	8
K510-021-306-00	172	9
K510-021-307-00	172	10
K510-021-600-00	172	15
K510-021-610-00	172	19
K510-022-000-00	18	1
K510-022-001-00	173	1
K510-022-004-00	173	2
P112-711-201-00	65	2
	70	2
	71	2
V111-163-001-60	14	31
	15	31
	16	14
	38	18
	133	40
	157	9
V111-163-002-00	38	18-A
	121	32
	122	35
V111-164-001-20	177	40
	178	40
V111-703-000-60	177	30
	178	30
V111-703-001-20	177	11-A
	177	37-A
	178	37
V111-703-001-60	132	11
V111-704-001-00	135	5
	135	41
V111-705-001-00	130	17
	131	17
	134	8
V111-706-001-60	136	5
V112-706-002-00	152	16
V120-265-001-20	3	43-A
V120-265-001-60	30	17
	31	18
V120-364-000-80	150	29
V120-364-001-00	14	20
	15	20
	19	6
	20	6
	42	19
	72	9

Part Code	Fig.	Key
V120-364-001-00	73	9
	74	10
	112	23
	115	13
	120	15
	128	15
	145	24
	146	24
V120-364-001-20	150	30
V120-365-001-20	3	43
V120-365-001-60	87	20
	88	20
	115	5-A
	128	10-A
V120-365-002-50	99	44
	100	45
	101	45
	102	45
V120-366-001-60	79	2
	87	14
	88	14
	99	29
	100	30
	101	30
	102	30
V120-366-002-50	148	4
	149	4
V120-366-003-00	174	5
	175	5
V120-368-002-00	129	8
V120-376-001-20	14	3
	15	3
V180-446-001-20	130	50
	131	49
V195-102-504-40	150	28
V195-163-006-10	98	8
V195-164-012-10	95	3
V195-164-016-10	150	32
V200-260-501-20	115	5
	128	10
V200-260-601-20	111	8
	155	9
	155	37
V200-260-602-00	14	26
	15	26

Numerical Index

Part Code	Fig.	Key
V200-260-602-00	87	41
V200-260-602-50	14	27
	15	27
V200-260-603-50	155	14
	155	36
V200-700-601-20	2	16
	3	10
V200-700-601-60	137	27
V200-700-602-50	133	47
V200-700-603-00	174	23
	175	23
V200-700-803-00	137	18
V201-260-803-50	115	38
V201-260-804-00	97	5
V201-260-805-00	17	17
	19	2
	20	2
	62	4
V201-260-807-00	96	2
V201-260-808-00	99	2
	100	2
	101	2
	102	2
V201-261-003-50	5	7
V201-261-007-50	17	5
	18	5
V201-261-014-00	17	4
	18	4
V201-360-801-60	10	7
V201-360-803-00	94	3
V201-360-803-50	42	8
V201-361-002-50	45	18
	46	18
V201-361-003-00	45	21
	92	12
	93	12
	117	6
V201-361-003-50	42	23
V201-361-004-0B	57	60
	58	60
	59	57
	60	57
V201-361-202-50	47	2
	48	2
V201-700-801-20	130	3

Part Code	Fig.	Key
V201-700-801-20	131	3
V203-461-002-20	2	3
V203-461-002-50	8	6
	10	2
V210-260-601-20	87	17
	88	17
V210-260-601-60	57	48
	58	48
	59	44
	60	44
	113	13
	123	12
	150	25
	150	34
V210-260-602-00	89	10
V210-260-603-00	137	31
	153	14
V210-360-601-20	3	36
	4	41
	115	42
	129	3
V210-360-601-60	19	21-A
	20	21-A
	99	41
	99	47
	100	42
	100	48
	101	42
	102	42
	103	23
	106	19
	121	56
	122	59
V210-360-602-00	19	8
	20	8
	103	30
	103	36
	104	18
	104	26
	105	22
	105	30
	106	25
	106	31
	153	10
	153	12

Part Code	Fig.	Key
V210-360-602-00	153	12-A
	153	16
	155	39
V210-360-602-50	150	22
V210-360-603-00	5	16
	110	2
	121	54
	122	57
	153	6
	153	18
	154	2
V210-560-601-20	116	4
V211-260-801-60	3	18
	3	41
	5	14
	42	21
	61	14
	138	30
	138	38
V211-260-802-00	2	19
	4	11
	4	48
	38	14
	61	4
	65	4
	66	3
	70	4
	71	4
	72	3
	73	3
V211-260-802-50	8	2
	18	18
	57	27
	58	27
	59	28
	60	28
	75	19
	121	3
	122	3
	152	9
V211-260-803-00	18	14
V211-260-803-50	140	3
V211-260-804-00	30	15
	31	15
V211-260-805-50	75	8

Numerical Index

Part Code	Fig.	Key
V211-360-801-60	112	20
	112	33
V211-360-802-00	3	4
	3	26
	3	41-A
	3	57
	14	9
	14	13
	14	25
	15	9
	15	13
	15	25
	16	7
	19	32
	38	14-A
	40	6
	41	6
	54	12
	55	10
	57	69
	58	69
	62	22
	63	2
	74	3
	83	6
	84	6
	84	9
	85	3
	85	6
	85	14
	86	3
	86	6
	86	15
	92	18
	93	18
	94	10
	114	7
	115	3
	115	22
	115	30
	115	34
	121	58
	122	61
	125	3
	126	3

Part Code	Fig.	Key
V211-360-802-00	126	6
	134	6
	138	44
	141	10
	141	16
	142	10
	142	16
	143	3
	143	6
	144	3
	145	13
	146	13
	152	5
	152	7
V211-360-802-50	3	1
	125	7
	150	14
V211-360-803-00	82	2
	92	20
	93	20
	141	11
V211-360-803-50	142	11
V211-360-804-50	112	2
V211-361-002-00	141	7
	142	7
V211-361-002-50	45	23
	92	14
	93	14
	120	2
V211-560-802-00	45	37
	46	32
V211-560-802-50	32	8
	55	4
	55	6
	113	7
	130	66
	131	65
V211-560-803-00	23	3
	45	48
	46	44
	90	2
	90	5
	91	2
	91	5
	92	3

Part Code	Fig.	Key
V211-560-803-00	93	3
V211-560-803-50	23	16
V211-560-804-50	57	5
	58	5
	59	5
	60	5
V220-540-802-50	75	20
V220-541-003-50	172	50
	173	41
V251-341-202-50	47	4
	48	4
V301-260-006-00	14	28
	15	28
	62	18
	72	11
	73	11
	128	17
	153	9
V301-700-003-00	132	14
	134	5
	134	23
	177	34
	177	36
	177	45
	178	34
	178	36
V301-700-004-00	177	18
	177	43
	178	18
	178	43
V301-700-006-00	3	2
	130	49
	131	48
	134	35
	135	74
	174	24
	175	24
V304-260-008-00	10	13
	14	7
	15	7
	16	5
	16	19
	16	22
	19	13
	19	16

Numerical Index

Part Code	Fig.	Key
V304-260-008-00	20	13
	20	16
	44	2
	74	18
	90	3
	90	6
	91	3
	91	6
	96	3
	115	39
	118	2
	120	22
	127	4
	130	64
	131	63
	135	102
	139	5
	151	4
V304-260-010-00	6	3
	123	20
V304-260-012-00	2	8
	40	4
	41	4
V304-260-014-00	14	18
	15	18
	67	4
	68	4
V304-460-008-00	42	7
	94	5
	148	29
	149	29
V304-460-010-00	42	24
V304-460-012-00	47	5
	48	5
V304-700-008-00	2	13
	130	35
	130	42
	131	35
	131	41
	137	21
	148	24
	149	24
V334-260-010-00	17	13
	18	13
V335-260-008-00	132	19
V335-260-010-00	43	2
V350-160-004-00	107	2
V350-160-005-00	98	4
V360-260-004-00	12	4
	13	4
V360-260-005-00	3	44
	99	45
	100	46
	101	46
	102	46
	103	20
	104	28
	105	32
	106	16
V360-260-006-00	12	20
	13	14
	14	22
	15	22
	19	10
	19	22
	20	10
	20	22
	72	11-A
	73	11-A
	87	15
	87	42
	88	15
	99	39
	99	42
	99	48
	100	40
	100	43
	100	49
	101	40
	101	43
	102	40
	102	43
	103	29
	104	20
	105	24
	106	24
	111	2
	111	4
	120	17
	150	26
V360-260-006-00	150	35
	152	12
	155	10
	155	15
	155	38
	157	12
V361-260-006-00	85	11
	86	12
V362-260-008-00	3	5
	3	28
	3	40
	3	42
	3	58
	12	23
	13	17
	14	10
	15	10
	18	22
	19	4
	20	4
	61	15
	62	6
	84	10
	85	4
	86	4
	92	19
	92	21
	93	19
	93	21
	94	9
	94	11
	95	5
	95	9
	108	3
	109	3
	115	31
	120	25
	127	5
	141	14
	142	14
	143	7
	145	28
	146	29
	152	10
V363-260-010-00	45	22

Numerical Index

Part Code	Fig.	Key
V363-260-010-00	57	63
	58	63
	59	60
	60	60
	92	13
	93	13
	128	8
V401-160-003-00	14	32
	15	32
	16	15
	38	19
	133	41
	157	11
V401-160-005-00	115	6
	128	11
V401-160-006-00	72	12
	73	12
	128	18
V401-160-008-00	5	5
	5	11
	10	8
	16	23
	17	18
	18	16
	19	17
	20	17
	23	5
	23	18
	32	5
	44	3
	75	21
	118	3
	130	63
	131	62
	132	18
	148	28
	149	28
	151	3
V401-160-010-00	2	4
	5	2
	5	8
	6	5
	8	7
	10	3
	11	2
V401-160-010-00	17	6
	17	12
	18	6
	18	12
	43	4
	45	19
	45	24
	46	19
	57	61
	58	61
	59	58
	60	58
	92	15
	93	15
	117	7
	123	19
V401-160-012-00	2	9
	47	3
	48	3
	76	6
	77	6
V401-700-003-00	132	13
	134	4
	177	31
	177	33
	177	44
	178	31
	178	33
V401-700-004-00	130	22
	131	22
	135	6
	135	29
	135	42
	135	65
	177	17
	177	42
	178	17
	178	42
V401-700-005-00	130	18
	131	18
	132	9
	134	9
V401-700-006-00	2	17
	3	3
	3	11
V401-700-006-00	133	48
	136	4
V401-700-008-00	2	14
	130	4
	130	34
	130	41
	131	4
	131	34
	131	40
	137	19
	148	23
	149	23
V402-160-012-00	57	58
	58	58
	59	54
	60	54
V410-260-010-00	123	18
V411-260-003-00	14	33
	15	33
	16	16
	38	20
	133	42
	157	10
V411-260-004-00	38	7
	78	7
	150	9
	150	20
V411-260-006-00	54	14
	55	12
	57	72
	58	72
	70	6
	71	6
	112	31
	113	10
	153	20
	157	4
V411-260-008-00	14	6
	15	6
	16	4
	17	19
	19	3
	19	37
	19	37-A
	20	3

Numerical Index

Part Code	Fig.	Key
V411-260-008-00	20	36
	20	36-A
	21	6
	22	5
	44	5
	62	5
	70	7
	71	7
	94	4
	97	6
	99	3
	100	3
	101	3
	102	3
	113	2
	147	6
	155	50
V411-260-010-00	2	5
	5	9
	6	4
	45	25
	92	16
	93	16
	117	4
	128	4
	130	45
	131	44
V411-260-012-00	2	10
	155	23
V411-260-014-00	14	17
	15	17
V411-260-016-00	19	27
	20	27
V411-260-018-00	70	11
	71	11
	72	5
	73	5
V411-700-003-00	132	12
	177	12
	177	12-A
	177	32
	177	39
	177	39-A
	178	12
	178	32

Part Code	Fig.	Key
V411-700-003-00	178	39
V411-700-004-00	130	23
	131	23
	177	8
	177	16
	177	41
	178	8
	178	16
	178	41
V411-700-005-00	134	10
V411-700-006-00	133	49
	135	96
V411-700-008-00	130	5
	131	5
	135	105
	137	20
V411-700-010-00	130	31
	130	43
	131	31
	131	42
V411-700-012-00	133	35
V500-162-002-00	113	3
V500-162-002-50	43	3-A
V500-162-501-50	38	3
	38	10
	62	13-A
	62	25-A
	112	29
	155	51
V500-162-502-50	43	3
V500-162-503-50	137	10-A
V500-163-001-50	74	20
V500-163-002-00	16	11
	16	27
	19	21
	20	21
	21	9
	22	8
	62	2
	62	8
	62	11
	62	23
	70	9
	71	9
	74	21

Part Code	Fig.	Key
V500-163-002-00	87	36
	87	46
	120	6
	120	19
	128	5
	147	5
V500-163-002-50	90	13
	91	13
	92	10
	93	10
V500-163-003-00	87	38
	87	48
V500-163-003-50	70	12
	71	12
	72	6
	73	6
V500-163-004-00	61	7
	87	2
	88	2
	88	30
	89	13
V500-164-002-50	38	5
	38	12
V522-100-601-60	121	4
	122	4
	138	6
V522-100-801-80	17	7
	18	7
	23	6
	23	19
	30	14
	31	14
	32	9
	45	2
	46	2
	57	3
	57	28
	57	64
	58	3
	58	28
	58	64
	59	3
	59	29
	59	56
	60	3

Numerical Index

Part Code	Fig.	Key
V522-100-801-80	60	29
	60	56
V523-100-300-80	174	13
	175	13
V600-110-600-10	121	19
	121	48
	122	22
	122	51
V600-110-600-20	148	14
	149	14
V600-110-600-30	121	38
	122	41
	138	22
V600-110-600-50	121	50
	122	53
	148	6
	149	6
V600-110-600-60	35	12
	36	12
	121	17
	122	20
V600-110-600-70	42	2
V600-110-620-10	57	23
	58	23
	59	24
	60	24
	148	13
	149	13
V600-110-620-30	33	6
	34	6
	42	3
	56	2
	57	24
	58	24
	59	25
	60	25
	116	10
	116	16
	116	21
	116	34
	116	37
	138	35
V600-110-620-40	26	2
	27	2
	30	11

Part Code	Fig.	Key
V600-110-620-40	31	11
	33	2
	34	2
	57	29
	57	38
	57	51
	58	29
	58	38
	59	30
	59	47
	60	30
	121	10
	122	11
	138	8
	138	11
	138	14
	172	17
	172	21
	173	14
V600-110-620-50	24	2
	25	2
	30	8
	31	8
	35	21
	36	21
	45	5
	46	5
	57	9
	59	9
V600-110-620-60	28	11
	29	11
	45	45
	46	41
	57	32
	57	54
	58	32
	58	54
	59	50
	60	50
V600-110-620-70	32	11
	45	31
	46	25
V600-110-620-80	57	55
	58	55
	59	51

Part Code	Fig.	Key
V600-110-620-80	60	51
V600-110-620-90	45	9
	45	13
	46	9
	46	13
V600-110-630-20	24	3
	25	3
	35	2
	36	2
V600-110-630-30	28	10
	29	10
	33	5
	34	5
	35	9
	36	9
	42	10
V600-110-630-40	57	32-A
	57	52
	58	32-A
	58	52
	59	48
V600-110-630-50	26	3
	27	3
	35	22
	36	22
	42	11
	45	43
	46	39
	59	33
	60	33
V600-110-630-60	30	2
	31	2
V600-150-600-20	123	5
	130	58
	131	57
V600-150-600-60	18	19
	117	5
V600-150-600-70	115	25
V600-150-620-20	10	5
	116	8
	116	30
V600-150-620-40	54	10
	55	8
V682-200-001-00	37	7
	37	13

Part Code	Fig.	Key
V682-200-001-00	37	19
	121	36
	122	39
V704-140-012-00	112	8
	115	37
	138	50
	145	16
	146	16
V704-140-014-00	32	10
V704-140-015-00	7	7
	9	7
	10	10
	62	23-A
	74	8
	87	6
	88	6
	112	12
	115	11
V704-140-017-00	19	28
	20	28
	116	12
	116	22
	116	32
	116	39
	122	16
	172	48
	173	39
V704-140-018-00	121	28
	122	31
V704-140-020-00	30	12
	31	12
	57	40
	58	40
	121	12
	122	13
	138	9
	138	12
	138	15
	172	18
	172	22
	173	29
V704-140-022-00	33	9
	34	9
V704-140-025-00	57	11
	58	11

Part Code	Fig.	Key
V704-140-025-00	59	11
	59	32
	60	11
	60	32
	130	54
	131	53
	147	7
V704-140-028-00	57	15
	58	15
	59	15
	60	15
	87	30
V704-140-032-00	52	2
	53	2
V704-140-035-00	115	26
V705-140-025-00	57	43
	58	43
	59	40
	60	40
V705-140-030-00	172	41
	173	38
V705-140-032-00	173	31
V705-140-035-00	138	23
V705-140-040-00	42	4
	56	3
	116	11
	116	17
	116	23
	116	35
	116	38
V705-140-047-00	35	10
	36	10
	54	11
	55	9
	57	39
	58	39
	59	38
	60	38
	121	11
	122	12
	138	16
	172	40
	173	30
V705-140-052-00	35	23
	36	23

Part Code	Fig.	Key
V705-140-052-00	45	6
	46	6
	57	10
	58	10
	59	10
	60	10
V706-140-045-00	45	10
	46	10
V707-140-055-00	18	20
	121	18
	122	21
V707-140-062-00	35	24
	36	24
	42	12
	57	34
	58	34
	59	34
	60	34
	115	27
V707-140-072-00	30	3
	31	3
	45	30
	46	24
V707-140-085-00	45	11
	46	11
V710-140-008-00	112	17
V720-101-900-80	23	12
	23	22
V720-101-901-00	37	5
	37	11
	37	17
	121	33
	122	36
	130	16
	131	16
	138	41
V720-102-401-50	17	8
	18	8
V720-103-502-80	174	21
	175	21
V720-103-503-00	66	2
V720-103-503-90	17	2
	18	2
	64	2
V720-111-900-60	75	7

Numerical Index

Part Code	Fig.	Key
V720-112-401-10	69	2
	75	17
	76	8
	76	10
	77	8
	77	10
	172	38
	173	28
V720-112-401-40	64	6
	75	6
	172	37
	173	27
V720-112-401-60	75	14
V720-112-401-80	64	4
	75	16
V721-103-103-50	17	3
	18	3
V721-103-108-50	45	17
	46	17
V723-101-501-50	32	20
V740-117-300-60	138	37
V744-112-220-70	35	34
	36	34
	37	2
	37	9
	37	15
	42	15
	121	30
	122	33
V744-112-250-70	57	44
	58	44
	59	41
	60	41
V744-115-300-70	135	18
	135	54
V744-117-300-70	121	39
	122	42
V744-117-350-70	57	25
	58	25
	59	26
	60	26
	138	24
V744-117-400-80	56	4
V744-120-300-70	135	12
	135	48
V744-120-400-70	33	3
	34	3
V744-120-470-70	30	13
	31	13
	121	13
	122	14
	138	17
	172	44
	173	34
V744-125-350-70	28	15
	29	15
	35	30
	36	30
	39	2
	130	55
	131	54
V744-125-450-70	121	51
	122	54
V744-125-470-80	30	9
	31	9
V744-125-521-00	45	7
	46	7
V760-150-000-00	54	13
	55	11
	70	5
	71	5
	113	9
V780-140-000-1T	75	15
V780-140-000-2T	75	9
V780-140-000-4T	172	39
V780-140-000-6B	23	13
V781-160-000-4B	45	32
	46	27
	57	7
	58	7
	59	7
	60	7
V781-160-000-6B	23	10
V783-160-602-00	75	18
W296-134-008-60	78	6

Alpabetical Index

Description	Fig.	Key
ARMATURE	11	11
ARM-GOVERNOR	7	9
ARM-PIVOT	7	6
ARM-ROCKER	3	5
BALL	4	15
BAND	6	22
	6	23
	6	24
BEARING-PLATE	1	28
BOLT	1	29
	1	30
	6	25
	7	12
	8	43
	9	10
	9	11
	11	15
BOLT, 6X12	7	21
BOLT, 6X20	5	24
BOLT, 6X40	5	23
BOLT, 6X8	7	13
BOLT, 7X35.2	2	14
	2	15
BOLT, 8X110	8	24
BOLT, 8X45	1	31
BOLT-FLANGED, 5X18	6	27
BOLT-FLANGED, 6X12	4	17
	6	28
BOLT-FLANGED, 6X14	6	29
BOLT-FLANGED, 6X16	5	26
	6	30
	7	26
BOLT-FLANGED, 6X20	5	27
	6	31
	8	44
BOLT-FLANGED, 6X25	1	35
	6	32
BOLT-FLANGED, 6X30	7	25
BOLT-FLANGED, 6X45	5	29
	6	33
	8	45
BOLT-FLANGED, 6X65	5	30
BOLT-FLANGED, 6X75	5	31
BOLT-FLANGED, 8X12	1	34
BOLT-FLANGED, 8X16	1	36
BOLT-FLANGED, 8X16	5	28
BOLT-FLANGED, 8X30	11	21
BOLT-FLANGED, 8X60	1	38
BOLT-FLANGED, 8X65	1	37
BOLT-FLANGED, 8X70	5	32
BRACKET	5	3
	5	4
	7	1
	9	5
	9	6
	10	1
BRACKET, COOLINF FAN	5	2
BREATHER-BRAKE	8	19
BRUSH	11	9
CAMSHAFT, VALVE	3	8
CAP	5	1
	11	1
CAP, SPARK PLUG	6	5
CAP-OIL FILLER	4	5
CARBURETOR ASSY	8	6
CASE-AIR FILTER	9	1
	9	2
CASE-PUMP	5	19
CASE-ROCKER	1	6
	1	7
CHAMBER-FLOAT	8	8
CLAMP	1	32
	5	20
	6	20
	8	32
	10	5
	10	6
	10	7
CLUTCH ASSY	11	2
COIL, CHARGING	6	15
COIL, HOUSING	6	14
COIL, IGNITION	6	4
COLLAR	7	17
	8	28
	8	29
	8	30
	9	9
COLLAR, 6.3X12X24.5	6	26
COLLAR, 6X13X2.3	7	16
COLLET	3	4
COVER	1	12
	5	9
	11	5
COVER ASSY	11	8
COVER, OIL PUMP	4	4
COVER-ASSY	11	7
COVER-CRANKCASE	1	15
	1	16
COVER-PUMP	5	10
CRANKCASE-COMP	1	17
	1	18
CRANKSHAFT ASSY	2	8
	2	9
ELEMENT, AIR-FILTER	9	4
ELEMENT-AIR FILTER	9	3
FAN, COOLING	5	16
FILTER OIL	4	8
FILTER/OIL	4	9
FLOAT	8	11
FLYWHEEL ASSY	6	6
FLYWHEEL-ASSY	6	7
GASKET	8	1
	8	2
	8	5
	9	8
GASKET, 16X24X1	6	1
GASKET, 8.5X16X1	1	27
GASKET, BREATHER, COVE	1	8
GASKET, CASE-ROCKER	1	10
GASKET, CRANKCASE COV	1	9
GASKET, DRAIN PLUG	4	1
GASKET, HEAD	1	1
GASKET, INTAKE MANIFO	8	3
	8	4
GASKET, MUFFLER	9	7
GASKET, PUMP CASE	5	6
GASKET, PUMP COVER	5	7
GASKET, THERMOSTAT CO	5	5
GAUGE	4	10
GEAR/SPUR	2	10
GEAR-SPUR	2	11
	4	11
	5	17
GOVERNOR-ASSY	7	10
HARNESS	6	8

Alpabetical Index

5402-097-120-00

Description	Fig.	Key
HARNESS	6	9
	6	10
HEAD COMP CYLINDER	1	3
	1	5
HEAD-COMPCYLINDER#1	1	2
HEAD-COMPCYLINDER#2	1	4
HOLDER	11	3
HOLDER-MAIN JET	8	22
HOSE-COOLING	5	11
IGNITOR	6	3
IMPELLER	5	18
INSULATOR	8	15
	11	6
JET MAIN,#103.8,3280	8	36
JET MAIN,#106.3	8	38
JET-MAIN,#101.3	8	37
JET-PILOT,#37.5	8	39
JOINT	1	19
	1	20
	10	3
KEY	2	13
	6	37
LEVER	11	4
LEVER-COMP	7	2
	7	3
LIMITER	8	18
LINK	7	4
	7	5
MANIFOLD-INTAKE	8	23
NOZZLE-MAIN	8	20
	8	21
NUT	3	13
	6	17
	6	18
	7	15
	10	4
	11	16
	11	17
	11	18
	11	20
NUT-HEX,5MM	7	28
NUT-HEX,6MM	7	27
	9	12
O RING	5	34
O RING,10MM	1	39

Description	Fig.	Key
O RING,11MM	4	19
O RING,25MM	4	20
O-RONG	8	34
PANEL-COMP-CONTROL	7	11
PIN	1	23
	1	24
	4	12
	5	21
	8	33
PIN-DOWEL	2	16
	5	33
PIN-PISTON	2	2
PIPE,OIL GAUGE	1	14
PIPE-INTAKE	8	14
PISTON-ENGINE	2	1
PISTON-ENGINE,0.50	2	5
PLATE	1	11
	4	3
PLUG,DRAIN	4	14
PLUG-SPARK,BPR4ES(HG	6	21
PUMP-WATER	5	13
REGULATOR,VOLTAGE	6	2
RELAY	6	13
RESERVOIR	5	12
RETAINER,SPRING	3	10
RETAINER,VALVE SPRIN	3	3
RING PISTON SET	2	4
RING SET	2	3
RING SNAP/S12	3	15
RING, SNAP	8	31
RING,SNAP	11	19
RING-O	4	13
RING-SNAP	2	12
ROD-ASSY CONNECTING	2	6
	2	7
ROD-PUSH	3	9
ROTOR,PUMP	4	7
ROTOR-PUMP,IN	4	6
SCREW	1	22
	3	12
	4	18
	6	34
	6	35
	8	25
	8	26

Description	Fig.	Key
SCREW	10	10
SCREW,5X30	7	14
SCREW,6X25	6	16
SCREW-PAN+-,4X14	8	46
SCREW-PAN-WP+,4X6	6	36
SCREW-PILOT AIR	8	7
SEAL	8	42
SEAL OIL	1	25
SEAL,OIL/IS 10X20	5	22
SEAL-MECHANICAL	5	15
SEAL-OIL	3	14
SEAL-OIL,VC 8X12X2.5	1	26
SHAFT	5	8
SHAFT,OIL PUMP	4	2
SHAFT-CARBURETOR	8	12
	8	13
SHAFT-ROCKER	3	6
SLEAVE	7	8
SOLENOID ASSY	8	17
SPRING	3	11
	4	16
	7	18
	7	19
	7	20
	8	40
	8	41
SPRING BRUSH	11	10
SPRING-GOVERNOR	7	7
STARTER-ELECTRIC	11	12
STOPPER	11	14
STUD	1	21
SWITCH	6	11
	6	12
	11	13
TAP ASSY	10	2
TAPPET	3	7
THERMOSTAT	5	14
TUBE	1	33
	8	47
TUBE 5.8X10.8X140	10	8
TUBE 5X10X700	10	9
TUBE,5X6X75	8	35
VALVE	1	13
	8	16
VALVE,EXHAUST	3	2

Alpabetical Index

Description	Fig.	Key	Description	Fig.	Key	Description	Fig.	Key
VALVE, FLOAT	8	10						
VALVE-INTAKE	3	1						
VALVE-THROTTLE	8	9						
WASHER	5	25						
	6	19						
	7	22						
	7	23						
	8	27						
WASHER, 6X28X1.6	7	24						
WASHER-PLAIN, 6MM	7	29						
WASHER-SPRING, 6MM	9	13						

Alpabetical Index

6004-097-640-30

Description	Fig.	Key
ADAPTER/320X080 ASSY	24	1
	24	1-A
ARM/CONTROL	22	30
ARM/FLOATING COMP	22	20
ARM/TENSION	24	2
	24	2-A
ARMATURE/STARTE ASSY	30	5
BALL,STEEL	1	5
BEARING,RB/6203	22	13
BEARING,THRUST CRANK	5	13
	6	2
	6	4
BEARING/BALL	22	14
BEARING/CONNECTING R	14	7
BEARING/CRANK/LOWER	5	12
	5	12-A
BEARING/CRANK/UPPER	5	11
	5	11-A
BEARING/CRANKSET	5	10-A
BEARING/NEEDLE	30	8
	30	9
BEARING/OILLESS	30	12
	30	14
	30	16
BEARING/THRUST/CRANK	5	13-A
	6	2-A
	6	4-A
BEARING/WITH SHOCKAB	30	13
BELT/VNR5A36.0	20	5
BODY/NOZZLE HOLDER	28	2
BODY/OILPUMP	17	2
BOLT	1	7
	5	2
	9	34
	12	18
BOLT,ADJUST	5	29
BOLT,JOINT	17	11
BOLT,S/M6X12/7T	13	5
	22	16
BOLT,S/M6X25/7T	17	5
BOLT,S/M8X20/7T	9	35
BOLT,S/M8X25/7T	4	3
BOLT,SEMS/M10X20,7T	8	3
BOLT,SEMS/M10X25,7T	25	8
BOLT/CONNECTINGROD	14	6
BOLT/CONNECTINGROD	14	6-A
BOLT/CRANK	16	9
BOLT/FLANGE	16	7
BOLT/M6	9	28
	9	29
BOLT/M6X10	22	18
BOLT/M6X18	22	26
BOLT/M8X20/7T	22	8
BOLT/THROUGH	30	30
BOLT/WASHERHEAD	29	8
BOLT/WS	17	4
BRACKET ROCKER SHAFT	12	12
BRACKET,ROCKER SHAFT	12	13
BRG/CONROD/UN050 SET	6	5
BRG/CONROD/UN100 SET	6	6
BRG/CRANK/UN050 SET	6	1
	6	1-A
BRG/CRANK/UN100 SET	6	3
	6	3-A
BRUSH/STARTER	30	2
CAMSHAFT/INJECTION P	22	10
	22	10-A
CAP,BLANK/30	9	31
CAP,OIL FILLER	2	2
CAP,SEALING	1	2
CARTRIDGE/OILFILTER	17	13
CLAMP,STRAINER	17	8
CLAMP/WIRE/10-15	18	14
	19	14
CLIP/HOSE/7.6-8.2	23	4
CLIP/HOSE/8.7-9.3	23	8
CLUTCH/STARTER ASSY	30	6
CONNECTINGROD ASSY	14	5
CONNECTOR,OIL FILTER	5	24
CONNECTOR/FUEL	23	1
CONNECTOR/GLOWPLUG	26	4
CORRUGATEDTUBE	23	5
COVER	30	11
COVER,INJ PUMP	5	25
COVER/CYLINDER HEAD	2	1
CRANKSHAFT ASSY	16	1
CUP/SEALING/12	5	7
CUP/SEALING/16	9	3
CUP/SEALING/28	5	3
CUP/SEALING/36	5	4
CUTTER,VALVE	12	5
CYLINDERBLOCK ASSY	5	1
	5	1-A
	5	1-B
	5	1-C
CYLINDERHEAD ASSY	1	1
	1	1-A
	1	1-B
DOWEL	5	21
ELEMENT ASSY	29	7
FLANGEBOLT/M10X20	10	2
	11	2
FLANGEBOLT/M10X70	25	5
FLANGEBOLT/M6X10	7	4
FLANGEBOLT/M6X12	5	27
FLANGEBOLT/M6X16	20	2
	26	7
FLANGEBOLT/M8X16	9	8
	17	9
FLANGEBOLT/M8X20	3	3
	11	4
	18	11
	18	17
	19	11
	19	17
	25	3
FLANGEBOLT/M8X25	9	36
	18	22
	19	21
FLANGEBOLT/M8X30	9	11
FLANGEBOLT/M8X40	3	4
	18	23
	19	22
FLANGEBOLT/M8X45	9	9
	18	6
	19	6
FLANGEBOLT/M8X50	12	19
FLANGEBOLT/M8X55	9	6
FLANGEBOLT/M8X75	9	10
	18	18
	19	18
FLANGEBOLT/M8X85	9	5
FLYWEIGHT	22	17
FLYWHEEL ASSY	16	5
	16	5-A

Alpabetical Index

Description	Fig.	Key
FRAME/COMMUTATOR END	30	10
GASKET	2	5
	18	2
	19	2
	26	6
	27	5
	27	21
GASKET,EXH.MANIFOLD	4	2
	27	7
GASKET,INLET MANIFOL	3	2
	27	6
GASKET,NOZZLE	21	3
GASKET,SPACER	19	9
	27	18
GASKET/COVER	5	26
	27	11
GASKET/CYLINDERHEAD	1	6
	27	3
GASKET/DELIVERYVALVE	29	4
GASKET/GEARCASE	9	23
	27	14
GASKET/HOUSING	18	16
	19	16
	27	19
GASKET/PLATE	9	33
	27	15
GASKET/SPACER	18	9
	19	9-A
	27	18-A
GASKET/WATER PUMP	19	5
	27	17
GASKET/WATERPUMP	18	5
	19	5-A
	27	17-A
GEAR/CAMSHAFT	13	2
GEAR/CRANK	16	3
GEAR/IDLE ASSY	13	6
GEAR/INJECTIONPUMP	22	11
	22	11-A
GEAR/STARTER PLANETA	30	17
GEAR/STARTERINTERNAL	30	18
GEARCASE ASSY	9	1
GENERATOR ASSY	25	1
GLOWPLUG	26	3
GUIDE/HARNESS COMP	11	3
GUIDE/HARNESS/A	18	24
	19	23
GUIDE/LEVELGAGE COMP	5	32
HANGER	10	1
	11	1
HOLDER/DELIVERYVALVE	29	2
HOLDER/NOZZLE ASSY	28	1
HOLDER/STARTER ASSY	30	3
HOSE,RUBBER	23	6
HOSE/RUBBER	2	6
	18	13
	19	13
HOSE/RUBBER/160	23	3
HOUSING ASSY	29	6
HOUSING/STARTER ASSY	30	7
HOUSING/THERMOSTAT	18	15
	19	15
INJECTIONNOZZLE ASSY	21	1
INJECTIONPUMP ASSY	22	1
JOINTT-TYPE	23	7
KEY/07X05X09	13	3
	22	12
KEY/07X05X43	16	4
LEVELGAGE	5	31
LEVER(CONTROL) COMP	22	25
LEVER/PINIONDRIVE	30	19
MANIFOLD(INLET) ASSY	3	1
MANIFOLD/EXHAUST	4	1
METAL,CRANK SET	5	10
NIPPLE	5	22
NOZZLE ASSY	28	51
NUT	12	17
	28	50
	30	28
	30	29
	30	34
NUT,CAP/M8	9	15
NUT/CAP	2	4
	9	15-A
NUT/FLANGE/M10	25	6
NUT/M08	9	7
	12	20
	18	7
	18	12
	19	7
NUT/M08	19	12
	22	9
NUT/M6	5	30
	9	30
	22	27
	22	31
NUT/M8	9	14
	9	14-A
	30	32
NUT/NOZZLERETAINING	28	5
NUT/PINIONSTOP	30	23
OILPAN COMP	7	1
OILPUMP ASSY	17	1
OILSEAL	5	14-A
ORING	29	3
O-RING/1A,P15	17	7
	27	16
O-RING/1A,P18	7	3
O-RING/1A,P8	22	28
O-RING/1A,S55	18	21
	19	20
	27	20
PACKING	9	16
	17	12
	27	13
PIECE,DISTANCE	28	6
PIN	5	17
	5	28
	9	19
PIN,CONTROL	22	22
PIN,GROOVE	9	22
PIN,NOZZLE HOLDER	28	3
PIN,PISTON	14	3
PIN,ST,B/10X18	16	2
PIN/ARM	9	17
PIN/IDLEGEAR	5	6
PIN/INJECTIONPUMP	29	10
PIN/SNAP	9	18
PIN/STRAIGHT	5	16
	5	16-A
	17	3
PIN/TUBE	5	15
PIPE,OIL	17	10
PIPE/FUEL	23	2
PIPE/INJECTION ASSY	21	4

Alpabetical Index

6004-097-640-30

Description	Fig.	Key
PIPE/INJECTION ASSY	21	5
	21	6
PIPE/WATEROUTLET	18	20
	19	19
PISTON	14	1
PISTON(OV/050)	15	1
PISTON(OV/100)	15	3
PISTON/VALVE/RELIEF	9	25
PLATE	29	11
	30	27
PLATE,THRUST	13	4
PLATE,THRUST INJPUMP	22	15
PLATE/ADJUST	25	2
PLATE/ADJUSTING	29	9
PLATE/FRONT	9	32
PLATE/REAR	8	1
PLATE/TAPPET/AD 0.2	29	23
PLATE/TAPPET/AD 0.25	29	27
PLATE/TAPPET/AD 0.3	29	24
PLATE/TAPPET/AD 0.35	29	28
PLATE/TAPPET/AD 0.4	29	25
PLATE/TAPPET/AD 0.45	29	29
PLATE/TAPPET/AD 0.5	29	26
PLATE/TAPPET/AD 0.55	29	30
PLATE/TAPPET/AD 0.6	29	18
PLATE/TAPPET/AD 0.65	29	31
PLATE/TAPPET/AD 0.7	29	19
PLATE/TAPPET/AD 0.8	29	20
PLATE/TAPPET/AD 0.9	29	21
PLATE/TAPPET/AD 1.0	29	22
PLATE/THRUST	13	4-A
PLATE/THRUST/INJECTI	22	15-A
PLATE/WATER PUMP	18	3
	19	3
PLUG	12	11
PLUG/M14X1.5	7	2
PLUG/PT1/2	1	3
PLUG/PT1/8	5	5
	9	2
PLUG/SCREW	9	20
PLUG/SCREW/SEAL	5	23
POINTER	8	2
PULLEY/CRANK	16	8
PULLEY/WATERPUMP	20	1
RACK/CONTROL ASSY	29	13
REPAIR/ENGINE SET	27	1
	27	1-A
RING,SNAP	14	4
RING,SNAP/12 C	9	27
RING,SNAP/16 C	12	15
RING,SNAP/4 E	22	23
RING/PISTON SET	14	2
RING/SNAP	30	21
	30	22
RINGGEAR	16	6
	16	6-A
RINGPISTON/OV050 SET	15	2
RINGPISTON/OV100 SET	15	4
RINK/CONTROL	22	21
ROCKERARM	12	9
	12	9-A
ROCKERSHAFT ASSY	12	8
	12	8-A
ROD,PUSH	12	7
SCREW	30	33
SCREW ADJUST	12	16
SCREW/HOLLOW	22	3
SCREW/WATER PUMP	18	4
	19	4
SEAL,BEARING CAP	5	8
	27	8
SEAL,BEARING CAP/7	5	9
	27	9
SEAL,CYL.HEAD COVER	2	3
	27	4
SEAL,OIL	1	4
	5	14
	9	4
	27	2
	27	10
	27	12
SEAT/SPRING/LOWER	29	17
SEAT/SPRING/UPPER	29	15
SEAT/VALVESPRING	12	4
SHAFT,CAM	13	1
SHAFT/ROCKERARM ASSY	12	10
SHAFT/STARTER PLANET	30	15
SHIM/INJECTIONPUMP	22	4
	22	5
	22	6
SHIM/INJECTIONPUMP	22	7
SLEEVE/PLUNGER	29	14
SOLENOID	26	5
SPACER,PUMP.WATER	18	8
	19	8
SPACER/FAN	20	3
	20	4
	20	4-A
SPRING	12	14
SPRING,RETURN	22	29
SPRING,STARTING	22	34
SPRING/DELIVERYVALVE	29	1
SPRING/GOVERNOR	22	24
SPRING/NOZZLEHOLDER	28	4
SPRING/PUMPPLUNGER	29	16
SPRING/RELIEF VALVE	9	26
SPRING/STARTERBRUSH	30	4
SPRING/VALVE	12	3
STARTER ASSY	25	7
STOPPER/FULLLOAD	9	13
STRAINER	17	6
	17	6-A
STUD	1	8
	4	4
	5	19
	5	20
STUD/M8X40	5	18
	18	10
	19	10
SWITCH/MAGNETIC ASSY	30	20
SWITCH/OILPRESSURE	26	1
SWITCH/OVERHEAT	26	2
TAPPET	12	6
TAPPET/INJECTIO ASSY	29	12
THERMOSTAT	18	19
THRUSTPIECE	22	19
VALVE ASSY	29	5
VALVE/EXHAUST	12	2
VALVE/INTAKE	12	1
VALVE/RELIEF ASSY	9	24
WASHER	21	2
	30	31
WASHER,PL/M6	22	32
WASHER,SP/M6	22	33
WASHER/0.9	28	7

Description	Fig.	Key	Description	Fig.	Key	Description	Fig.	Key
WASHER/0.925	28	8	WASHER/9X22X2	25	4			
WASHER/0.95	28	9	WASHER/AIR BLEEDER	22	2			
WASHER/0.975	28	10	WASHER/SK	30	24			
WASHER/08X14X01	9	12		30	25			
	9	21		30	26			
	27	22	WATERPUMP ASSY	18	1			
WASHER/1.0	28	11		19	1			
WASHER/1.025	28	12	YOKE/STARTER ASSY	30	1			
WASHER/1.05	28	13						
WASHER/1.075	28	14						
WASHER/1.1	28	15						
WASHER/1.125	28	16						
WASHER/1.15	28	17						
WASHER/1.175	28	18						
WASHER/1.2	28	19						
WASHER/1.225	28	20						
WASHER/1.25	28	21						
WASHER/1.275	28	22						
WASHER/1.3	28	23						
WASHER/1.325	28	24						
WASHER/1.35	28	25						
WASHER/1.375	28	26						
WASHER/1.4	28	27						
WASHER/1.425	28	28						
WASHER/1.45	28	29						
WASHER/1.475	28	30						
WASHER/1.5	28	31						
WASHER/1.525	28	32						
WASHER/1.55	28	33						
WASHER/1.575	28	34						
WASHER/1.6	28	35						
WASHER/1.625	28	36						
WASHER/1.65	28	37						
WASHER/1.675	28	38						
WASHER/1.7	28	39						
WASHER/1.725	28	40						
WASHER/1.75	28	41						
WASHER/1.775	28	42						
WASHER/1.8	28	43						
WASHER/1.825	28	44						
WASHER/1.85	28	45						
WASHER/1.875	28	46						
WASHER/1.9	28	47						
WASHER/1.925	28	48						
WASHER/1.95	28	49						

Alpabetical Index

2232-097-100-20

Description	Fig.	Key
ACCUMULATOR ASSY	69	1
ACTUATOR ASSY	14	30
	15	30
	16	13
	38	17
	133	39
	157	8
ADAPTER, STRAIGHT	75	12
ADAPTER/90 G1/2 ASSY	64	3-A
ADAPTER/90DEG/PUMP	65	5
	75	11-A
ADAPTER/G1/2-L20	64	3
ADAPTER/L/G1/4 ASSY	76	9
	77	9
ADAPTER/L/ORIFICE	75	11
ADAPTER/PF1/4 ASSY	76	7
	77	7
ADAPTER/SUCTION COMP	66	1
ADAPTERFILTER	23	14
ADAPTOR/G3/8XM16ASSY	64	5
ANGLE	4	27
ARM LH	148	16
ARM RH	149	16
ARM, HST LEVER	14	16
	15	16
ARM, PLANTING/E/LH	174	1
	174	1-A
ARM, PLANTING/E/RH	175	1
	175	1-A
ARM, PLANTING/LH/E	174	1-B
ARM, PLANTING/RH/E	175	1-B
ARM/ADJUST	130	24
ARM/ADJUST/D	131	24
ARM/AUTO ACCELERATOR	21	3
	22	2
ARM/BRAKE/NP COMP	62	3
ARM/CLUCH/FERTILIZE	57	45
	58	45
ARM/CLUCH/ROTOR	57	46
	58	46
	59	42
	60	42
ARM/CLUCH/ROTOR COMP	113	1
ARM/CLUTCH COMP	56	5
	56	5-A
ARM/CLUTCH/1 COMP	112	13
ARM/CLUTCH/2 COMP	112	14
ARM/CLUTCH/3 COMP	112	15
ARM/CLUTCH/AZE COMP	138	47
	138	47-A
ARM/CLUTCH/PLANTING	74	12
	74	12-A
	74	12-B
ARM/CLUTCH/SEEDLING	155	41
	155	42
ARM/COUNTER/50 COMP	130	44
ARM/COUNTER/50/ COMP	131	43
ARM/CYLINDER COMP	67	1
ARM/CYLINDER/6D COMP	68	1
ARM/DISCHARGE	133	23
	135	36
	135	36-A
	135	72
	135	72-A
ARM/DRIBVE/NP COMP	130	56
	131	55
ARM/DRIVE COMP	130	36
ARM/DRIVE/D COMP	131	36
ARM/EFLOATSENSE COMP	120	8
	120	8-A
	120	8-B
ARM/FERTILIZEDRIVE	130	65
	131	64
ARM/HANDLING COMP	87	37
ARM/MOTOR/ROTOR COMP	115	14
	115	14-A
ARM/PITMAN/6	42	22
ARM/PLANTING/A COMP	38	1
	38	1-A
ARM/PLANTING/B COMP	38	8
ARM/PUSH-OUT/PZ	174	16
	175	16
ARM/ROTOR	115	23
ARM/ROTOR/CLUCH COMP	113	11
	113	11-A
ARM/SEEDLINGFEED	155	1
ARM/SEEDLINGTANK	150	13
ARM/SLIDER/LOWE COMP	87	11
	88	11
ARM/SLIDER/MAIN COMP	87	9
ARM/SLIDER/MAIN COMP	88	9
ARM/SLIDER/UPPE COMP	87	10
	88	10
ARM/STOPPER/LH COMP	45	49
	46	45
ARM/STOPPER/RH COMP	45	50
	46	46
ARM/TENSION COMP	10	4
ARM/TENSION/FD COMP	7	5
	9	5
ARM/TRUNNION/HMS1/00	172	23
	173	12
ARM/TRUNNION/NP	19	1
	20	1
BALL, STEEL	37	7
	37	13
	37	19
	121	36
	122	39
BAND	72	7
	73	7
	103	21
	103	31
	104	17
	105	21
	106	17
	106	26
	119	4
BAND, WIRE/140	4	45
	4	45-A
	12	18
	42	18
	103	32
	106	27
	132	3
	135	92
	140	5
BAND, WIRE/170	4	7
	4	46
BAND, WIRE/250	3	51
	4	47
	103	33
	106	28
BAND/CLAMP/PUSH	87	22
	88	22

Alpabetical Index

Description	Fig.	Key
BASE/COOLINGFAN/D	8	4
BASE/COUNTER/NP COMP	62	21
BASE/ENGINE/HG COMP	6	1
BASE/HANDLING COMP	87	47
BASE/MARKER/LH COMP	145	11
	145	11-A
	146	11
BASE/MARKER/RH COMP	145	12
	145	12-A
	146	12
BASE/MOTOR/CLUTCH	112	1
BASE/MOTOR/PLANTING	74	1
BASE/MOTOR/ROTO COMP	115	1
BASE/TENSION/D COMP	10	1
BASE/TOTALCLUTC COMP	135	100
	135	100-A
BATTERY(55B24L) ASSY	109	4
BATTERY/44B19L ASSY	108	4
BATTERYSTAY COMP	4	12
	108	6
	109	6
	140	4
BEARING	172	26
BEARING,BALL	58	51
	60	47
BEARING,RB/6001	121	19
	121	48
	122	22
	122	51
BEARING,RB/6002	148	14
	149	14
BEARING,RB/6002SS	123	5
	130	58
	131	57
BEARING,RB/6003	121	38
	122	41
	138	22
BEARING,RB/6003SS	172	47
	173	37
BEARING,RB/6005	121	50
	122	53
	148	6
	149	6
BEARING,RB/6006	35	12
	36	12
BEARING,RB/6006	121	17
	122	20
BEARING,RB/6006SS	18	19
	117	5
BEARING,RB/6007	42	2
BEARING,RB/6007SS	115	25
BEARING,RB/6201	57	23
	58	23
	59	24
	60	24
	148	13
	149	13
BEARING,RB/6202SS	10	5
	116	8
	116	30
BEARING,RB/6203	33	6
	34	6
	42	3
	56	2
	57	24
	58	24
	59	25
	60	25
	116	10
	116	16
	116	21
	116	34
	116	37
	138	35
BEARING,RB/6204	26	2
	27	2
	30	11
	31	11
	33	2
	34	2
	57	29
	57	38
	57	51
	58	29
	58	38
	59	30
	59	47
	60	30
	121	10
	122	11
BEARING,RB/6204	138	8
	138	11
	138	14
	172	17
	172	21
	173	14
BEARING,RB/6204SS	54	10
	55	8
BEARING,RB/6205	24	2
	25	2
	30	8
	31	8
	35	21
	36	21
	45	5
	46	5
	57	9
	59	9
BEARING,RB/6206	28	11
	29	11
	45	45
	46	41
	57	32
	57	54
	58	32
	58	54
	59	50
	60	50
BEARING,RB/6207	32	11
	45	31
	46	25
BEARING,RB/6208	57	55
	58	55
	59	51
	60	51
BEARING,RB/6209	45	9
	45	13
	46	9
	46	13
BEARING,RB/6302	24	3
	25	3
	35	2
	36	2
BEARING,RB/6303	28	10
	29	10

Alpabetical Index

2232-097-100-20

Description	Fig.	Key
BEARING,RB/6303	33	5
	34	5
	35	9
	36	9
	42	10
BEARING,RB/6304	57	32-A
	57	52
	58	32-A
	58	52
	59	48
BEARING,RB/6305	26	3
	27	3
	35	22
	36	22
	42	11
	45	43
	46	39
	59	33
	60	33
BEARING,RB/6306	30	2
	31	2
BEARING,RB/6306SH2	45	28
	45	29
	46	22
	46	23
BEARING,RB/6903	172	46
	173	36
BEARING/BALL 6205SH2	58	9
	60	9
BEARING/BALL/6304SH2	60	48
BEARING/THRUST	172	24
	173	13
BEARINGBALL	176	10
	179	10
BEARINGCOVER	176	11
	179	11
BELT/PLANT/PZ	155	27
BELT/VA023	5	17
BELT/VB049	17	14
BELT/VC053	18	23
BLOCK/CYLINDER/23CC	173	3
BLOCK/CYLINDER/24CC	172	4
BLOCK/CYLINDER/HMS1	172	3
BLOCK/PORT/HMS1/021	172	2
BLOCK/PORT/HMS1/022	173	2
BLOWER/FG ASSY	134	19
BOLT	28	13
	29	13
	35	32
	36	32
	39	3
	56	7
	132	8
BOLT,S/M6X12	87	17
	88	17
BOLT,S/M6X12/7T	116	4
BOLT,S/M6X16	57	48
	58	48
	59	44
	60	44
	113	13
	123	12
	150	25
	150	34
BOLT,S/M6X20	89	10
BOLT,S/M6X30	137	31
	153	14
BOLT,S/M8X16	3	18
	3	41
	5	14
	42	21
	61	14
	138	30
	138	38
BOLT,S/M8X20	2	19
	4	11
	4	48
	38	14
	61	4
	65	4
	66	3
	70	4
	71	4
	72	3
	73	3
BOLT,S/M8X20/7T	45	37
	46	32
BOLT,S/M8X25	8	2
	18	18
	57	27
BOLT,S/M8X25	58	27
	59	28
	60	28
	75	19
	121	3
	122	3
	152	9
BOLT,S/M8X25/7T	32	8
	55	4
	55	6
	113	7
	130	66
	131	65
BOLT,S/M8X30	18	14
BOLT,S/M8X30/7T	23	3
	45	48
	46	44
	90	2
	90	5
	91	2
	91	5
	92	3
	93	3
BOLT,S/M8X35	140	3
BOLT,S/M8X35/7T	23	16
BOLT,S/M8X40	30	15
	31	15
BOLT,S/M8X45/7T	57	5
	58	5
	59	5
	60	5
BOLT,S/M8X55	75	8
BOLT,SP/M10X20	141	7
	142	7
BOLT,SP/M10X25	45	23
	92	14
	93	14
	120	2
BOLT,SP/M6X12	3	36
	4	41
	115	42
	129	3
BOLT,SP/M6X16	19	21-A
	20	21-A
	99	41

Description	Fig.	Key
BOLT, SP/M6X16	99	47
	100	42
	100	48
	101	42
	102	42
	103	23
	106	19
	121	56
	122	59
BOLT, SP/M6X20	19	8
	20	8
	103	30
	103	36
	104	18
	104	26
	105	22
	105	30
	106	25
	106	31
	153	10
	153	12
	153	12-A
	153	16
	155	39
BOLT, SP/M6X25	150	22
BOLT, SP/M6X30	5	16
	110	2
	121	54
	122	57
	153	6
	153	18
	154	2
BOLT, SP/M8X16	112	20
	112	33
BOLT, SP/M8X20	3	4
	3	26
	3	41-A
	3	57
	14	9
	14	13
	14	25
	15	9
	15	13
	15	25
	16	7

Description	Fig.	Key
BOLT, SP/M8X20	19	32
	38	14-A
	40	6
	41	6
	54	12
	55	10
	57	69
	58	69
	62	22
	63	2
	74	3
	83	6
	84	6
	84	9
	85	3
	85	6
	85	14
	86	3
	86	6
	86	15
	92	18
	93	18
	94	10
	114	7
	115	3
	115	22
	115	30
	115	34
	121	58
	122	61
	125	3
	126	3
	126	6
	134	6
	138	44
	141	10
	141	16
	142	10
	142	16
	143	3
	143	6
	144	3
	145	13
	146	13
	152	5

Description	Fig.	Key
BOLT, SP/M8X20	152	7
BOLT, SP/M8X25	3	1
	125	7
	150	14
BOLT, SP/M8X30	82	2
	92	20
	93	20
	141	11
BOLT, SP/M8X35	142	11
BOLT, SP/M8X45	112	2
BOLT, SUS/M6X12	2	16
	3	10
BOLT, SUS/M6X16	137	27
BOLT, SUS/M6X25	133	47
BOLT, SUS/M6X30	174	23
	175	23
BOLT, SUS/M8X12	130	3
	131	3
BOLT, SUS/M8X30	137	18
BOLT/10X16/PQ	37	4
	37	10
BOLT/FAN	18	15
	18	15-A
BOLT/FRANGE/M10X25	45	40
	46	35
BOLT/JOINT	123	17
BOLT/KNOB/M06X13	111	6
	111	6-A
	153	8
	153	8-A
BOLT/M10X12	121	34
	122	37
BOLT/M10X140	17	4
	18	4
BOLT/M10X20	133	8
BOLT/M10X22/9T, P1.25	2	3
BOLT/M10X25	117	3
	119	3
BOLT/M10X25/7T	45	18
	46	18
BOLT/M10X25/9T, P1.25	8	6
	10	2
BOLT/M10X30	76	5
BOLT/M10X30/7T	45	21
	92	12

Alpabetical Index

2232-097-100-20

Description	Fig.	Key
BOLT/M10X30/7T	93	12
	117	6
BOLT/M10X30/7T/G	117	6-A
BOLT/M10X35	5	7
BOLT/M10X35/7T	42	23
BOLT/M10X35/S	45	3
	45	51
	46	3
	46	47
BOLT/M10X40/7T,SEAL	57	60
	58	60
	59	57
	60	57
BOLT/M10X75	17	5
	18	5
BOLT/M12X25/7T	47	2
	48	2
BOLT/M12X45	40	3
	41	3
BOLT/M4X14/SUS	177	20
	178	20
BOLT/M4X20/SUS	177	19
	178	19
BOLT/M5X12	115	5
	128	10
BOLT/M5X12/SP/STAINL	152	19
BOLT/M6X12	111	8
	155	9
	155	37
BOLT/M6X16	134	38
	174	19
	175	19
BOLT/M6X16/SP/SUS	133	17-A
BOLT/M6X16X16	3	16
	3	38
	3	46
	87	24
	87	32
	87	51
	88	24
	88	32
	89	4
	99	25
	100	26
	101	26

Description	Fig.	Key
BOLT/M6X16X16	102	26
BOLT/M6X2	134	21
BOLT/M6X20	14	26
	15	26
	87	41
BOLT/M6X25	14	27
	15	27
BOLT/M6X35	155	14
	155	36
BOLT/M8X110	23	4
BOLT/M8X12	23	11
BOLT/M8X16/7T	10	7
BOLT/M8X160	23	17
BOLT/M8X20	5	4
BOLT/M8X20/SP/S	174	22
	175	22
BOLT/M8X30	5	10
BOLT/M8X30/7T	94	3
BOLT/M8X35	115	38
BOLT/M8X35/7T	42	8
BOLT/M8X40	97	5
BOLT/M8X50	17	17
	19	2
	20	2
	62	4
BOLT/M8X70	96	2
BOLT/M8X80	99	2
	100	2
	101	2
	102	2
BOLT/M8X90	115	19
	115	19-A
	121	7
	121	7-A
	122	7
	122	7-A
	123	6
	123	6-A
	124	5
	124	5-A
	138	3
	138	3-A
	141	5
	141	5-A
	142	5

Description	Fig.	Key
BOLT/REAMER/M10X30	76	5-A
	77	5
BOLT/S/M6X16/G	123	12-A
BOLT/S/M8X16/G	138	30-A
BOLT/SEAL/M10X25/S	7	4
	8	5
	9	4
	50	3
	51	3
BOLT/SEAL/M10X25/S/G	119	3-A
BOLT/SEAL/M10X30/S	50	2
	51	2
	57	59
	58	59
	59	55
	60	55
	76	4
	77	4
BOLT/SEAL/M10X30/S/G	119	3-B
BOLT/SEAL/M12X35	57	57
	58	57
	59	53
	60	53
BOLT/SEAL/M8X16/S	28	13-A
	29	13-A
	35	32-A
	36	32-A
BOLT/SHAFT/DIFF	32	4
BOLT/SHIFT/PLANTING/	37	16
BOLT/SP	103	19-A
	104	27
	105	31
	106	15
BOLT/SP/M10X25/G	120	2-A
BOLT/SP/M6X20/G	132	22
	133	9
	133	17
	133	22
	133	28
	133	33
	134	18
	134	34
	135	86
BOLT/SP/M8X20/G	115	22-A
	130	14

Alpabetical Index

Description	Fig.	Key
BOLT/SP/M8X20/G	131	14
	133	37
	133	46
	134	13
BOLT/SP/M8X25/SUS FA	80	13
	81	13
	83	2
	84	2
BOLT/SPM6X55/G	130	2
	131	2
	134	16
	135	73
BOLT/TENSIONER/M10X3	138	39
BOLT/UNC3/8X22	5	3
BOOT	99	35
	100	36
	101	36
	102	36
	132	17
BOOT, DRIVE SHAFT	52	4
	53	4
BOOT/CAM/LEAD	123	14
BOOT/DISCHARGE	133	12
BOOT/DISCHARGE/C	133	14
BOOT/DISCHARGE/RH	133	13
BOOT/SEEDLING FEED C	155	45
BOOT/SHAFT	54	3
	55	3
BOOTS/ROTOR/DRIVE	113	8
BOSS, EXTENSION MARKE	97	9
BRACKET, FUSE	111	7
BRACKET/ENGINE/A	2	1
BRACKET/ENGINE/B	2	2
BRACKET/GENERATOR/FD	5	1
BRACKET/RESERVE TANK	4	40
BRACKET/ROLLING COMP	119	2
	119	2-A
BRACKET/SEAT/PZ/8	85	2
	86	2
BRAKE/8 ASSY	28	7
	29	7
BRAKE/SLIPPERS/B	14	15
	15	15
B-RIVET/ALMI	150	10
BRUSH	169	1

Description	Fig.	Key
BUCKET/FERTILIZE	87	50
BULB/12V 20W	151	2
BULB/12V18W	98	2
BUMPER/NP COMP	63	1
BURUSH COMP	135	7
	135	7-A
	135	43
	135	43-A
BUSH	67	2
	68	2
BUSH, COLUMN	61	2
BUSH, EXHAUST LEVER	135	32
	135	68
BUSH, GEAR	135	22
	135	58
BUSH, SEEDING OUT	155	20
BUSH, SEEDLING	135	84
	140	12
	155	18
	155	35
BUSH/08X18X36	174	4
	175	4
BUSH/10X12X06	130	30
	130	37
	130	48
	131	30
BUSH/10X12X10	112	18
	130	26
	130	38
BUSH/10X12X20	130	25
	131	25
BUSH/10X13X10	131	26
	131	37
	131	47
BUSH/12X15X20	112	6
BUSH/12X16X24	124	4
BUSH/14X16X20	135	78
BUSH/15X17X25	74	2
	87	12
	88	12
	115	2
BUSH/15X18X25	112	10
BUSH/17X19X15	19	29
	20	29
	138	20

Description	Fig.	Key
BUSH/17X28X19	135	17
	135	26
	135	53
	135	62
BUSH/18X21X25	65	2
	70	2
	71	2
BUSH/19X35X20	61	3
BUSH/20X23X25	28	3
	29	3
BUSH/22X26X25	123	9
BUSH/68X71X14	172	28
	173	17
BUSH/95X100X22	172	27
	173	16
BUSH/DISCHARGELEVER	135	32-A
	135	68-A
BUSH/F/10X12X15	16	9
	19	19
	20	19
BUSH/GEAR	135	13
	135	49
BUSH/HOLDER/CLUTCH/N	155	32
BUSH/ROTOR/SIDE	114	16
BUSH/SEEDLING FEED/C	155	19
BUSH/SEEDLINGFEED/20	155	12
BUSHPUSHNUT/08	38	15
	135	90
BUZZER	99	37
	100	38
	101	38
	102	38
BUZZERASSY	99	43
	100	44
	101	44
	102	44
CABLE, HOPPER	177	6
CABLE, HOPPER/F1	177	6-A
CABLE/ACCELERATOR/6D	22	1
CABLE/ACCELERATOR/G/	21	1
CABLE/CHOKE/G/NP	21	10
CABLE/CLUTCH/FERTILI	57	67
	58	67
CABLE/FERTILIZE/CL	135	98
CABLE/FERTILIZE/L	135	99

Alpabetical Index

2232-097-100-20

Description	Fig.	Key
CABLE/FERTILIZE/R	135	97
CABLE/HOPPER/NP/F	178	6
CABLE/HST/FORWARD	19	33
	19	33-A
	19	33-B
	20	32
	20	32-A
	20	32-B
CABLE/HST/REVERSE	19	34
	19	34-A
	19	34-B
	20	33
	20	33-A
	20	33-B
CABLE/RIDGE CLUTCH 2	112	25-B
CABLE/RIDGE CLUTCH/6	112	24
	112	25
	112	25-A
	112	26
CABLE/ROTOR/CLUCH	113	14
CABLE/SEEDLING FEED	155	46
	155	48
	155	49
CABLE/SEEDLING FEED/	155	48-A
CAM/CHANGE/NP COMP	16	8
CAM/HST/D/NP COMP	15	11
CAM/HST/FRONT	14	23
CAM/HST/FRONT/NP	15	23
	15	23-A
CAM/HST/NP COMP	14	11
CAM/HST/REAR	14	24
	15	24
CAM/LEAD	123	1
CAM/PUSHED OUT/LH	174	28
CAM/PUSHED OUT/RH	175	28
CAM/SEND/6 COMP	124	1
	124	1-A
CAM/STOPSWITCH	157	3
CAP	3	22
	4	28
	61	11
	97	8
	134	20
	135	104
	137	29
CAP,DUCT/EXHAUST	133	19
CAP,OIL/30	23	7
	23	7-A
CAP,SEEDLING FRAME/P	87	49
	141	18
	142	18
CAP,SHUTTER	133	3
CAP/10	64	8
	148	18
	149	18
	150	16
CAP/20X40	87	33
CAP/22X15	115	32
	141	19
	142	19
CAP/24X18	125	4
CAP/30X20	87	7
	88	7
	141	17
CAP/35	138	25
CAP/35/YELLOW	23	8
CAP/40X40	83	7
	84	7
CAP/9	12	11
CAP/BUMPER	63	3
CAP/COVER/COLUMN/NP	99	31
	100	32
	101	32
	102	32
CAP/D6/YELLOW	96	4
CAP/ENGINECOVER/620	85	15
CAP/FERTILIZECLUTCH	135	91
CAP/FRAME/TANK	141	17-A
	142	17
CAP/FRONTWHEEL/650	49	1
CAP/FUSE BOX	103	7
	104	6
	105	7
	106	6
CAP/GREEN/8	38	4
CAP/ROD	127	6
CAP/SWITCH	14	2
	15	2
CAP/TANK/NONLEA ASSY	12	6
	13	6
CAP/YELLOW/10/KNOB	174	17
	174	17-A
	175	17
	175	17-A
CAPSULE/LOWER/NP	135	2-A
	135	38-A
CAPSULE/LOWER/PZN	135	2
	135	38
CAPSULE/UPPER/PZN	135	1
	135	37
CARTRIDGE	66	4
	66	4-A
CASE	176	1
	179	1
CASE/CENTERROTOR/LH	116	1
	116	2
CASE/CENTERROTOR/RH	116	25
	116	26
CASE/FINAL/LOWE COMP	45	26
CASE/FINAL/LOWER/D	46	20
CASE/FINAL/UPPER	45	1
	46	1
CASE/HMS1/017	172	1
CASE/HMS1/022	173	1
CASE/REAR/IN/LH	57	1
	57	1-A
	58	1
	58	1-A
	59	1
	59	1-A
	60	1
	60	1-A
CASE/REAR/IN/RH	57	2
	58	2
	59	2
	60	2
CASE/REAR/OUT/8D	57	4
	58	4
	59	4
	60	4
CASE/RELAY COMP	111	3
	111	3-A
CASE/ROTARY/IN/LH	148	3
CASE/ROTARY/IN/RH	149	3
CASE/ROTARY/OUT/LH	148	2

Description	Fig.	Key
CASE/ROTARY/OUT/RH	149	2
CASE/SEND/LH	121	1
	121	1-A
	121	1-B
	121	2
	122	1
	122	1-A
	122	1-B
	122	2
CASE/SUPPORTFRAME	138	1
	138	1-A
CASE/SUTTER	133	2
CASE/TRANSMISSION/LH	23	1
CASE/TRANSMISSION/RH	23	2
CASING/INNER	134	24
CASING/OUTER/PG	134	25
CATCH/LEAD	123	10
CHAIN/ROLLER/41X034	57	20
	58	20
	59	21
	60	21
CHAIN/ROLLER/60	138	26
CLAMP	4	33
CLAMP,HARNESS	98	5
CLAMP,SPRING/4	137	5
CLAMP/WIRE/36-44	4	17
CLAMP/WIRE/38-46	4	17-A
CLAMP/WIRE/49-60	4	25
CLAMP/WORM/20-32	3	33
	66	6
CLAMP/WORM/23-35	4	16
CLAMP/WORM/32-50	3	50
	123	15
CLAMP/WORM/45-60	3	51-A
	123	16
CLEANER/AIR ASSY	4	19
CLIP	4	23
CLIP,MAT/SUNSET GRAY	57	71
	58	71
CLIP,STEP MAT	80	6
	80	18
	81	6
	81	18
	83	4
	84	4
CLIP,STEP MAT	87	8
	88	8
CLIP/HOSE/10.4-11.1	23	23
CLIP/HOSE/11.1-12.0	3	14
	13	21
CLIP/HOSE/11.9-12.6	13	19
	66	11
CLIP/HOSE/12.6-13.4	12	12-A
	12	16
	13	12
CLIP/HOSE/13.8-14.8	12	24
CLIP/HOSE/14.7-15.9	12	12
CLUCH/PLANTER/DRIVE	35	27
	36	27
CLUTCH,ROLLER/FC-25	130	52
	131	51
CLUTCH/DIFFLOCK	32	16
CLUTCH/DRIVE	57	14
	58	14
	59	14
	60	14
CLUTCH/DRIVEN/FERTIL	57	31
	57	31-A
	58	31
	58	31-A
CLUTCH/HST/NP COMP	19	25
	19	25-A
	20	25
	20	25-A
CLUTCH/NP ASSY	30	5
	30	5-A
	30	5-B
CLUTCH/NP8 ASSY	31	5
	31	5-A
	31	5-B
CLUTCH/PLANTING	35	26
	36	26
CLUTCH/SEEDLING FEED	155	43
CLUTCHFULCRUM	135	85
	135	85-A
COCK	3	23
COCK ASSY	4	3
COLLAR SLIDE METAL	152	8
COLLAR, CARRIER	121	22
	122	25
COLLAR/08X12X05)	138	46-A
	138	46-B
COLLAR/09X12X09	19	38
	20	37
COLLAR/09X12X57	99	5
	100	5
	101	5
	102	5
COLLAR/10X12X14	75	5
COLLAR/10X14X8	112	16
COLLAR/11X25X5	45	39
	46	34
COLLAR/12X16X24	115	35
COLLAR/13X18X17	155	33
COLLAR/17X22X20	16	25
COLLAR/17X25X08	138	34
COLLAR/18X22X12	116	24
COLLAR/20X25X21	30	4
	31	4
COLLAR/20X25X3.2	57	18
	58	18
	59	18
	60	18
COLLAR/28X35X02	57	16
	58	16
	59	16
	60	16
COLLAR/32X43X21	46	37
COLLAR/60X70X08	46	26
COLLAR/CLUTCH	57	17
	57	17-A
	58	17
	58	17-A
	59	17
	60	17
COLLAR/ROTOR/SIDE	114	17
COLLAR/SPRING	45	35
	46	30
COLLER/10X14X10	128	3
COLLER/47X3	135	20
	135	56
COLLER/8X15X15	62	7
COLOR/11X14X31	17	16
COLOR/21X27X18	35	14
	36	14

Alpabetical Index

2232-097-100-20

Description	Fig.	Key
COLOR/21X27X23	35	17
	36	17
COLUMN/LOWER/NP COMP	61	13
COLUMN/UPPER/NP COMP	61	1
	61	1-A
CONNECTOR	23	9
CONNECTOR/MINIHALF	23	20
CONTROLLER/6/FRONT	110	1
	110	1-A
	110	1-B
	110	1-C
	110	1-D
	110	1-E
	110	1-F
CONTROLLER/6/REAR	111	1
	111	1-A
CONTROLLER/MOTO ASSY	103	35
	104	25
	105	29
	106	30
CORRUGATED TUBE/07X0	3	17
CORRUGATED TUBE/07X1	99	36
	100	37
	101	37
	102	37
CORRUGATED TUBE/10X6	155	47
CORRUGATETUBE/28X120	4	15
CORRUGATETUBE/28X65	3	32
COUPLING/DRAIVE	123	2
	139	1
	139	1-A
COUPLING/PUMP	64	7
COVER	138	28
COVER ASSY	4	20
COVER,METAL	42	5
COVER,SEEDING TANK/M	150	3
	150	4
COVER/BATTERY/D/NP	109	5
COVER/BATTERY/NP	108	5
COVER/CASE/ROTOR	116	3
COVER/CLUTCH	30	6
	31	6
COVER/CLUTCH/FERTILI	57	68
	58	68
COVER/COIL/M	114	5
COVER/COLUMN/FRONT/N	99	26
	100	27
	101	27
	102	27
COVER/COLUMN/LOWER/N	99	30
	100	31
	101	31
	102	31
COVER/COLUMN/REAR/NP	99	27
	100	28
	101	28
	102	28
COVER/CONTROLLER/Z	78	8
COVER/DICTHER/NP	132	4
COVER/DUCT	134	37-A
COVER/DUCT/LOWE COMP	134	36-A
COVER/ENGINE/D/NP	86	1
COVER/ENGINE/NP	85	1
COVER/EXAUST/NP8	2	15
	2	15-A
COVER/EXHAUST/F COMP	3	6
COVER/EXT	3	8
COVER/FAINAL/FRONT/D	46	42
COVER/FERTIRIZE CLUT	57	70
	58	70
COVER/FINAL/FRONT	45	46
COVER/FRAME	138	28-A
COVER/FRONT/UPPER	45	16
	46	16
COVER/HOPPER/6 ASSY	177	3
	177	3-A
	177	3-B
	178	3
	178	3-A
	178	3-B
COVER/MARKER/LH	145	25
	145	25-A
	146	25
COVER/MARKER/RH	145	26
	145	26-A
	146	26
COVER/MOTOR	145	22
	146	22
COVER/MOTOR/NP	87	13
	88	13
COVER/MOTOR/PLANTING	74	11
COVER/MUFFLER/G COMP	3	9
COVER/MUFFLER/NP	3	7
COVER/PLANTING/PZ/E	174	2
	175	2
COVER/PLANTINGCLUTCH	23	15
COVER/RADIATOR COMP	3	39
COVER/RADIATOR/IN	3	54
COVER/RADIATOR/LH	4	42-B
COVER/RADIATOR/OUT	3	55
COVER/RADIATOR/RH	4	42
	4	42-A
	4	44
COVER/RADIATOR/UPPER	3	15
	3	37
	3	37-A
	4	49
	4	49-A
COVER/REAR/INPUT	57	26
	58	26
	59	27
	60	27
COVER/RELAY	111	5
COVER/RIDGECLUTCH	112	32
COVER/ROTOR/6	115	41
CUSHION	174	10
	175	10
CUSHION,SEAT	85	12
	86	13
CUSHION/ARM/PZ	174	26
	175	26
CUSHION/HOOD	78	2
CUSHION/SEAT/NP	95	8
CYLINDER COMP	65	1
DICTHER/NP	137	15
DIODE/1.5A-3P ASSY	103	11
	105	11
DISC	176	6
	179	6
DUCT/CLEANER/FD620	3	47-A
DUCT/DISCHARGE	133	15
	133	15-A
DUCTHOSE/REAR/6	134	33
	134	33-A
ELEMENT ASSY	4	21

Description	Fig.	Key
FAN	134	26
FAN/HST	17	15
	18	21
FILTER, FUEL	12	21
	13	15
FILTER/FUEL	12	10
	13	9
FILTER/LINE/09X12X15	75	4
FILTER/PORT/11	75	10
FINGER/14/G	174	18
	175	18
FLANGEBOLT	4	5
FLOAT/CENTER/6	126	1
FLOAT/SIDE/NP	144	1
FORK/CULTCH/LH/ COMP	135	87
	135	87-A
FORK/CULTCH/RH/ COMP	135	88
	135	88-A
FRAME, SEEDLING	87	31
	88	31
	89	3
FRAME/6/NP COMP	134	1
FRAME/6/PZ	153	2
FRAME/DEPTH/6 COMP	125	1
FRAME/LOWER/6 COMP	141	9
	142	9
FRAME/MAIN/D/E1 COMP	50	1
	50	1-A
FRAME/MAIN/G/E1 COMP	51	1
	51	1-A
FRAME/REAR/NP COMP	83	5
	84	5
FRAME/ROTOR HEIGHT/6	115	17
	115	17-A
FRAME/UPPER/6 COMP	141	6
	142	6
FROK/PLANT COMP	174	7
	175	7
FRONT/DIFFCASE	32	1
	32	1-A
FUN/COOLING/NP	7	2
	8	3
	9	2
FUSE, BLADE/32	105	6
FUSE/BLADE/32V05A	103	3
FUSE/BLADE/32V05A	104	3
	105	3
	105	3-A
	106	3
FUSE/BLADE/32V10A	103	4
	104	4
	105	4
	106	4
FUSE/BLADE/32V20A	103	5
	103	5-A
	104	5
	105	5
	105	5-A
	106	5
FUSE/BLADE/32V25A	103	6
FUSE/SLOW BLOW/40A	103	9
	103	9-A
	104	8
	105	9
	105	9-A
	106	8
FUSE/SLOW BLOW/50A	103	18
	104	15
	105	19
FUSE/SLOW BLOW/60A	103	10
	104	14
	105	10
	105	18
	106	9
GASKET	2	12
	138	29
	172	34
	173	24
	174	3
	175	3
GASKET/HOPPER	177	24
	178	24
GAUGE/FUEL/0-57 ASSY	12	3
	13	3
GEAR, BEVEL/15T	122	9
GEAR, COUNTER	148	9
	149	9
GEAR, SPUR/13	135	10
	135	46
GEAR, STERRING ARM	42	6
GEAR, SUN/LH	148	5
GEAR/BEVEL/10	30	1
	31	1
	46	21
	116	19
GEAR/BEVEL/10)	59	19
GEAR/BEVEL/10/8	60	8
GEAR/BEVEL/10/FERTIL	57	8
	58	8
	59	8
	60	19
GEAR/BEVEL/11	32	6
	45	4
	46	4
GEAR/BEVEL/12/FORGIN	116	7
	116	29
GEAR/BEVEL/15	32	7
	121	16
GEAR/BEVEL/15/G	122	19
GEAR/BEVEL/15/NP	35	19
	36	19
GEAR/BEVEL/20	32	12
	45	8
	46	8
	116	15
GEAR/BEVEL/36	45	41
GEAR/BEVEL/44	46	36
GEAR/BEVEL/9	45	27
GEAR/CLUTCH/PLANTING	74	6
GEAR/COUNTER/E	148	9-A
	149	9-A
GEAR/HST/NP COMP	19	18
	20	18
GEAR/LH	148	11
GEAR/MARKER/LH COMP	145	14
	145	14-A
	146	14
GEAR/MARKER/RH COMP	145	15
	145	15-A
	146	15
GEAR/RH	149	11
GEAR/RIDGECLUTC COMP	112	9
GEAR/ROLLING COMP	128	1
GEAR/ROTOR COMP	115	9
GEAR/SPARSE PLANTING	35	6

Alpabetical Index

2232-097-100-20

Description	Fig.	Key
GEAR/SPARSE PLANTING	35	7
	35	15
	35	18
	36	6
	36	7
	36	15
	36	18
GEAR/SPUR/10	135	77
GEAR/SPUR/13	135	11
	135	47
GEAR/SPUR/13/24TIMES	121	23
	122	26
GEAR/SPUR/15/20TIMES	121	24
	122	27
GEAR/SPUR/15-15	35	16
	36	16
GEAR/SPUR/15-17	33	1
	34	1
GEAR/SPUR/16/18TIMES	121	25
	122	28
GEAR/SPUR/20	121	20
	121	41
	121	49
	122	23
	122	44
	122	52
GEAR/SPUR/21-28	35	5
	36	5
GEAR/SPUR/22	34	8
GEAR/SPUR/24	33	8
	121	47
	122	50
GEAR/SPUR/24/18TIMES	121	45
	122	48
GEAR/SPUR/25/20TIMES	121	44
	122	47
GEAR/SPUR/26	28	4
	28	5
	29	5
GEAR/SPUR/26/24TIMES	121	43
	122	46
GEAR/SPUR/27	29	4
GEAR/SPUR/30	33	7
	34	7
GEAR/SPUR/30 COMP	35	3

Description	Fig.	Key
GEAR/SPUR/30 COMP	35	3-A
GEAR/SPUR/31 COMP	36	3
	36	3-A
GEAR/SPUR/36	28	2
	29	2
GEAR/SUN/LH/E	148	5-A
GEAR/SUN/RH	149	5
GEAR/SUN/RH/E	149	5-A
GEAR/SUPER/58	32	2
GEAR/TURN	30	10
	31	10
GENERATOR	5	6
GREASE,PLANTING/300G	170	3
	171	2
GRIP	90	8
	91	8
	92	5
	93	5
	125	6
	133	29
	134	29
	143	5
GRIP/07X34	38	11
GRIP/11X60	87	39
GROMMET/15X17X05	3	27
	4	10
GROMMET/17X21X3	134	11
GROMMET/20/SEEDING T	150	18
GROMMET/COLUMN	61	9
GUARD/DUCT/6 COMP	133	45
GUARD/RAIL/LH COMP	147	1
	147	1-A
	147	1-B
GUARD/RAIL/RH COMP	147	2
	147	2-A
	147	2-B
GUIDE/ADJUSUT	130	13
	131	13
GUIDE/CHANGE/NP	16	6
GUIDE/DICTHER/CENTER	137	16
GUIDE/DICTHER/SIDE	137	17
GUIDE/HARNESS/LIFT	117	9
GUIDE/HOSE/FERTILIZE	137	30
GUIDE/HST/NP COMP	14	8
	15	8

Description	Fig.	Key
GUIDE/ROTOR COMP	115	33
GUIDE/SEEDLING/LH/PZ	152	13
GUIDE/SEEDLING/RH/PZ	152	14
HAB/BRAKE	28	6
	29	6
HANDLE/ADJUST	130	15
	130	15-A
	131	15
	131	15-A
HANDLE/DELIVERY COMP	169	2
HARNESS,WINKER WIRE/	151	5
HARNESS,WIRE/NO.8	103	24
	106	20
HARNESS/BATTERY EART	108	2
	109	2
HARNESS/BATTERY/6D/N	109	1
HARNESS/BATTERY/6G	108	1-A
HARNESS/BATTERY/G/NP	108	1
HARNESS/BLOCK SENSOR	132	2
HARNESS/E16	103	19
	105	16
HARNESS/ENGINE/D/E16	104	13
HARNESS/ENGINE/DF	105	17
HARNESS/ENGINE/DFE16	105	17-A
HARNESS/HOPPER/ ASSY	132	1
HARNESS/MAIN/6D ASSY	105	1
HARNESS/MAIN/6D/E16	104	1
	104	1-A
HARNESS/MAIN/6DF/E16	105	1-A
	105	1-B
HARNESS/MAIN/6G ASSY	103	1
HARNESS/MAIN/6G/E16	106	1
	106	1-A
HARNESS/MAIN/6GF/E16	103	1-A
	103	1-B
HARNESS/REAR/6/E16	104	12
	104	12-A
	106	14
	106	14-A
HARNESS/REAR/6F ASSY	103	17
	105	15
HARNESS/REAR/6FE16	103	17-A
	103	17-B
	105	15-A
	105	15-B

Description	Fig.	Key
HARNESS/SEEDLIN ASSY	87	21
	88	21
HARNESS/SEEDLING TAN	107	1
HARNESS/SENCER/PZ	132	6
HARNESS/SWGND	132	20
HARNESS/SWGND/5	12	5
	13	5
HARNESSBAND/202	103	27
	103	34
	104	24
	105	28
	106	29
HING/HOPPER	177	21
	177	21-A
	178	21
HITCH COMP	117	2
HOLDDER/DISCHARGE	133	32
HOLDDER/DISCHARGE/SI	133	36
HOLDER(FUEL FILTER)	12	22
	13	16
HOLDER,SEEDLONG,UPPE	155	34
HOLDER/30	3	56
HOLDER/CABLE/SEND	141	15
	142	15
HOLDER/JE/9-9	3	19
	31	16
	61	5
	121	6
	122	6
	150	23
HOLDER/LEADCAM	123	4
	124	3
HOLDER/RESISTANTBAR	153	17
	153	17-A
HOLDER/SEEDLING FEED	155	11
HOLDER/SEEDLING HOLD	153	4
	153	7
HOLDER/SHAFT/PLANT	54	9
	55	7
HOLDER/SPRING COMP	155	8
HOOD/MAGNET	80	2
	81	2
HOOD/NP ASSY	78	1
	78	1-A
HOOD/REAR/NP	79	1
HOOD/REAR/NP	79	1-A
HOOK	134	2
HOOK,COUPSULE	135	3
	135	39
HOOK,HOPPER	178	38
HOOK/BONNET/PQ	134	7
HOOK/BRUSH	177	9
	178	9
HOOK/CAPSULE	135	3-A
	135	39-A
HOOK/FUNNEL	135	9
	135	45
HOOK/MARKER	145	27
	146	27
HOOK/MARKER/E16	146	28
HOOK/RAIL	87	40
HOOK/SCRAPER/K COMP	89	11
HOOK/SEEDLING BOX/SL	87	27
	88	27
HOPPER HOOK	177	38
HOPPER/3/LH/6	177	1
	178	1
HOPPER/3/RH/6	177	2
	178	2
HOPPER/6 COMP	136	1-A
	136	1-B
	136	1-C
HOPPER/6Z COMP	136	1
HOPPERGUIDE	177	26
	178	26
HOPPERHOOK	178	38-A
HOPPERNET	136	7
HORN ASSY	99	40
	100	41
	101	41
	102	41
HOSE(8X12X1600)	66	10
HOSE,HYDRAULIC/750 A	66	8
HOSE/07X11X1750	13	18
HOSE/07X11X460	13	20
HOSE/08X430	140	9
HOSE/08X730	140	8
HOSE/08X850	140	7
HOSE/08X970	140	6
HOSE/19X25X80	66	5
HOSE/300	3	13
HOSE/650	23	21
HOSE/AIRCLEANER	4	24
HOSE/AIRCLEANER/FD62	3	47
HOSE/AIRINTAKE/FD620	3	48
HOSE/COOLING/LOWER/6	3	29
HOSE/COOLING/UPPER/6	3	30
HOSE/FERTILIZE/930	137	2
HOSE/FERTILIZER/6	137	1
HOSE/FERTILIZER/LOWE	137	7
HOSE/FERTILIZER/STRA	137	6
	137	6-A
HOSE/FERTILIZER/UPPE	137	7-A
	137	7-B
HOSE/FUEL/1280	13	11
HOSE/FUEL/210	12	13
HOSE/FUEL/340	12	14
	13	10
HOSE/FUEL/660	12	11-A
	12	15
HOSE/HYDRAULIC/2150	66	9
HOSE/RADIATOR/ROWER	4	14
	4	14-A
HOSE/RADIATOR/UPPER	4	13
HOSE/RUBBER	4	30
	4	32
	4	36
	4	37
HOSE/WEIGHT/PPZ	137	8-A
HST/NP/23 ASSY	18	1
HST/NP/24 ASSY	17	1
HUB,MARKER	145	4
	146	4
HUB/12X05	130	28
	131	28
HUB/12X08	130	27
	131	27
HUB/21X35X76	115	24
HUB/DIFF/DRIVE	32	15
HUB/PLANTING ARM	174	20
	175	20
HUB/PLANTING/DRIVEN	35	13
	36	13
HUB/PULLEY	18	11
HUB/ROLLER CLUTCH	130	47

Alpabetical Index

2232-097-100-20

Description	Fig.	Key
HUB/ROLLER CLUTCH	131	46
HUB/ROLLER CLUTCH/NP	130	51
	131	50
HUB/ROTOR/M	114	2
	114	12
INSULATOR	6	2
	99	16
	100	16
	101	17
	102	17
INSULATOR/20X280	3	35
INSULATOR/MOUNT/34	2	7
INSULATOR/MOUNT/LH	2	6
JOINT BALL M08LH	16	20
	19	14
	20	14
	120	21
	130	60
	131	59
JOINT BALL M08RH	16	18
	19	12
	20	12
	44	1
	120	20
	130	62
	131	61
JOINT,BLOWER	134	31
JOINT/66	137	14
JOINT/BLOWER	134	32
JOINT/BLOWER/LOWER/6	134	36
JOINT/DISCHARGE	133	6
JOINT/FERTLIZE/CENTE	137	12
JOINT/FERTLIZE/LH	137	11
JOINT/FERTLIZE/RH	137	13
JOINT/REAR/1200 COMP	52	1
JOINT/REAR/6D COMP	53	1
	53	1-A
JOINTT-TYPE 2	140	11
KEY	99	22
	100	22
	101	23
	102	23
	121	46
	122	49
KEY,05X05X18 PLUS	148	12

Description	Fig.	Key
KEY,05X05X18 PLUS	149	12
KEY,CARRIER STAR	121	21
	122	24
KEY,DRIVE SHAFT	122	17
KEY,SPROCKET	148	25
	149	25
KEY/05X05X26	32	14
KEY/05X05X35	17	10
	18	10
KEY/05X05X50	121	52
	122	55
	123	3
KEY/05X05X51	139	4
KEY/06X06X18	35	4
	36	4
KIT/SEAL ASSY	76	2
	77	2
KNOB SET	85	7
	86	8
KNOB/BL	99	19
	100	19
	101	20
	102	20
KNOB/GR	99	20
	100	20
	101	21
	102	21
KNOB/HYDRAULIC SENSI	99	18
	100	18
	101	19
	102	19
KNOCK/SEND/PZ8	121	26
	122	29
LABEL/A MOUNT OF FER	167	2
	168	2
LABEL/AIR CLEANER/FD	3	53
LABEL/BATTERY/K	162	17
	163	17
	164	17
	165	17
LABEL/CAUTION	158	7
	159	7
	160	7
	161	7
LABEL/CAUTION/BATTER	158	5

Description	Fig.	Key
LABEL/CAUTION/BATTER	159	5
	160	5
	161	5
LABEL/CAUTION/BELT/	158	2
	159	2
	160	2
	161	2
LABEL/CAUTION/BLOWER	167	9
	168	9
LABEL/CAUTION/CHECK/	158	1
	159	1
	160	1
	161	1
LABEL/CAUTION/COVER/	158	4
	159	4
	160	4
	161	4
LABEL/CAUTION/DRIVE/	158	8
	159	8
	160	8
	161	8
LABEL/CAUTION/FAN/K	158	9
	161	9
LABEL/CAUTION/FERTIL	167	3
	168	3
	168	16
LABEL/CAUTION/HAND	167	8
	168	8
LABEL/CAUTION/HOPPER	167	4
	167	7
	168	4
	168	7
LABEL/CAUTION/JUST/P	158	15
	159	14
	160	14
	161	15
LABEL/CAUTION/MARKER	158	11
	159	10
	160	10
	161	11
LABEL/CAUTION/SEEDLI	160	18
	161	19
LABEL/CAUTION/WASHIN	160	19
	161	20
LABEL/CAUTION/Z LINK	160	17

Description	Fig.	Key
LABEL/CAUTION/Z LINK	161	18
LABEL/CHOKE	100	24
LABEL/CLEANING/CAPSU	167	6
	168	6
LABEL/CLUTCH/LH/E16	167	12
	168	12
LABEL/CLUTCH/RH/E16	167	13
	168	13
LABEL/CONTROLLER SET	162	10
	163	11
	164	10
	165	11
LABEL/DEPTH/E16	162	13
	163	14
	164	13
	165	14
LABEL/DIESELFUEL/K	163	12
	165	12
LABEL/DISCHARGE LEVE	167	10
	168	10
LABEL/DISCHARGE OPER	167	5
	168	5
LABEL/ENGINE	3	20
LABEL/ERROR VIEW/NP/	162	9
	163	10
	164	9
	165	10
LABEL/FERTILIZER/NP/	167	1
	168	1
LABEL/FRASH	151	8
LABEL/FUSE	103	2-A
	104	2
	105	2-A
	106	2
LABEL/FUSE/ENGINE/DF	105	20
LABEL/FUSE/ENGINE/K	104	16
LABEL/FUSE/ENGINE/KF	105	20-A
LABEL/FUSE/MAIN/M	103	2
	105	2
LABEL/FUSE/MOTOR/R/E	103	15-A
	106	13
LABEL/FUSE/REAR/MOTO	103	15
LABEL/GASOLINE/K	162	11
	164	11
LABEL/HANDLE	167	11

Description	Fig.	Key
LABEL/HANDLE	168	11
LABEL/HOOD/REAR	162	3
	163	4
	164	3
	165	4
LABEL/LEFT/E16	162	14
	163	15
	164	14
	165	15
LABEL/MANUAL/CLEANER	162	16
	164	16
LABEL/OIL LEVEL/FD/E	162	19
	164	19
LABEL/OIL LEVEL/FD62	3	52
LABEL/OIL/K	162	18
	163	18
	164	18
	165	18
LABEL/OILING/NP/E16	162	8
	163	9
	164	8
	165	9
LABEL/PANEL/LH/6/E16	99	9
	100	9
LABEL/PANEL/LH/6/N/E	101	9
	102	9
LABEL/PANEL/MAIN/6D/	99	8
	102	8
LABEL/PANEL/MAIN/6G/	100	8
	101	8
LABEL/PANEL/RH/6/E16	99	10
	100	10
	101	10
	102	10
LABEL/PETROL	12	9
LABEL/PLANT INTERVAL	166	1
	166	1-A
	166	2
LABEL/RIGHT/E16	162	15
	163	16
	164	15
	165	16
LABEL/SEEDLING PICKI	162	12
	163	13
	164	12

Description	Fig.	Key
LABEL/SEEDLING PICKI	165	13
LABEL/SLIDER/LEVER/K	166	3
LABEL/SLOW BLOW	103	16
LABEL/SLOWBLOW/8FK	103	16-A
LABEL/SWITCH/E16	132	15
LABEL/TACT/SWITCH/E1	99	13
	100	13
	101	13
	102	13
LABEL/TOTALCLUTCH/K	167	14
	168	14
LABEL/WARNING	158	12
	159	11
	160	11
	161	12
LABEL/WARNING/GAS/K	158	10
	159	9
	160	9
	161	10
LABEL/WARNING/JUST/P	158	16
	159	15
	160	15
	161	16
LABEL/WARNING/MUFFLE	158	6
	159	6
	160	6
	161	6
LABEL/WARNING/PEDAL/	158	3
	159	3
	160	3
	161	3
LABEL/WARNING/PLANT	158	17
	159	16
	160	16
	161	17
LABEL/WARNING/RADIAT	158	14
	159	13
	160	13
	161	14
LABEL/WARNING/SHAFT	158	13
	159	12
	160	12
	161	13
LAMP/HEAD/NP ASSY	98	1
LAMP/MASCOT/NP8 ASSY	96	1

Alpabetical Index

2232-097-100-20

Description	Fig.	Key
LAMP/TURNSIGNAL ASSY	151	1
LATE/REGULATOR COMP	5	13
LEVER	90	7
	91	7
	92	4
	93	4
	121	31
	122	34
LEVER/CHANGE/NP COMP	16	1
LEVER/DEPTH COMP	125	5
LEVER/DISCHARGE	133	27
	133	27-A
LEVER/FERTILIZE CLUT	135	89
	135	89-A
LEVER/GLIP	16	2
LEVER/HST/NP SET	14	1
	15	1
LEVER/PICKING COMP	143	4
LEVER/TOTALCLUTCH	135	101
LIFT COMP	117	1
LINEMARKER/NP	145	8
	146	8
LINER/KINGPIN	45	12
	46	12
LINING/HST	14	14
	15	14
LINK/LOWER COMP	70	1
LINK/LOWER/6D COMP	71	1
LINK/UPPER COMP	72	1
LINK/UPPER/6D COMP	73	1
LOCK/BRAKE	62	9
LOCK/CARRY	87	34
LOCKNUT	174	8
	175	8
MARKER(M)	97	7
MARKER/SIDE/6/LH/NP	97	1
MARKER/SIDE/6/RH/NP	97	2
MAT/CENTER/LH/NP	80	16
	81	16
MAT/CENTER/RH/NP	80	17
	81	17
MAT/FRONT/LH/NP	80	4
	81	4
MAT/FRONT/RH/NP	80	5
	81	5
MAT/REAR/NP	83	3
	84	3
METAL/52X62X16	57	33
	58	33
METAL/CAM/LEAD	123	8
METAL/HST COMP	18	17
METAL/RELIEF/KTMS6	75	3
METAL/S COMP	138	36
METAL/SLIDE	172	12
	173	5
MIRROR ASSY	94	7
MOLDING/HOOD/LH	162	1
	163	1
	164	1
	165	1
MOLDING/HOOD/RH	162	2
	163	2
	164	2
	165	2
MOLE/70	4	43
MOTER	87	19
	88	19
	115	4
	128	9
MOTOR/LH ASSY	74	4
	112	3
	145	19
	146	19
MOTOR/RH ASSY	19	23
	20	23
	145	20
	146	20
MUFFLER/D COMP	2	11
	2	11-A
MUFFLER/FD620 COMP	1	1
NEEDLE	173	15
NETPOCKET	95	2
NIPPLE,GREASE	54	13
	55	11
	70	5
	71	5
	113	9
NOZZLE/OIL	140	10
NUT	87	28
	88	28
NUT	89	12
NUT,LOCK PUSH OUT	174	12
	175	12
NUT,SPEED/4	177	4
	177	23
	178	4
	178	23
NUT,SPEED/M4	107	2
NUT,SPEED/M5	98	4
NUT,SUS/M3	132	14
	134	5
	134	23
	177	34
	177	36
	177	45
	178	34
	178	36
NUT,SUS/M4	177	18
	177	43
	178	18
	178	43
NUT,SUS/M6	3	2
	130	49
	131	48
	134	35
	135	74
	174	24
	175	24
NUT,SUS/M8	2	13
	130	35
	130	42
	131	35
	131	41
	137	21
	148	24
	149	24
NUT,WASHER/M6	85	11
	86	12
NUT/ADJUST	130	12
	131	12
NUT/FLANGE/M10	138	40
NUT/LH/M08	16	21
	19	15
	20	15
	120	23

Alpabetical Index

Description	Fig.	Key
NUT/LH/M08	130	61
	131	60
NUT/M10	6	3
	17	13
	18	13
	123	20
NUT/M10,P=1.25	43	2
NUT/M10/7T	42	24
NUT/M12	2	8
	40	4
	41	4
NUT/M12/7T	47	5
	48	5
NUT/M14	14	18
	15	18
	67	4
	68	4
NUT/M20	99	34
	100	35
	101	35
	102	35
NUT/M6	14	28
	15	28
	62	18
	72	11
	73	11
	128	17
	133	10
	153	9
NUT/M8	10	13
	14	7
	15	7
	16	5
	16	19
	16	22
	19	13
	19	16
	20	13
	20	16
	44	2
	74	18
	90	3
	90	6
	91	3
	91	6

Description	Fig.	Key
NUT/M8	96	3
	97	4
	115	39
	118	2
	120	22
	127	4
	130	64
	131	63
	132	19
	135	102
	139	5
	151	4
NUT/M8/7T	42	7
	94	5
	148	29
	149	29
NUT/RING	99	23
	100	23
	101	24
	102	24
NUT/U/M12	61	12
NUT/WASER/M6/SUS	130	6
	131	6
	133	50
	134	39
	137	28
	152	17
NUT/WASHER	137	19-A
NUT/WASHER/M10	45	22
	57	63
	58	63
	59	60
	60	60
	92	13
	93	13
	128	8
NUT/WASHER/M4	12	4
	13	4
NUT/WASHER/M5	3	44
	99	45
	100	46
	101	46
	102	46
	103	20
	104	28

Description	Fig.	Key
NUT/WASHER/M5	105	32
	106	16
NUT/WASHER/M6	12	20
	13	14
	14	22
	15	22
	19	10
	19	22
	20	10
	20	22
	72	11-A
	73	11-A
	87	15
	87	42
	88	15
	99	39
	99	42
	99	48
	100	40
	100	43
	100	49
	101	40
	101	43
	102	40
	102	43
	103	29
	104	20
	105	24
	106	24
	111	2
	111	4
	120	17
	150	26
	150	35
	152	12
	155	10
	155	15
	155	38
	157	12
NUT/WASHER/M8	3	5
	3	28
	3	40
	3	42
	3	58
	12	23

Alpabetical Index

2232-097-100-20

Description	Fig.	Key
NUT/WASHER/M8	13	17
	14	10
	15	10
	18	22
	19	4
	20	4
	61	15
	62	6
	84	10
	85	4
	86	4
	92	19
	92	21
	93	19
	93	21
	94	9
	94	11
	95	5
	95	9
	108	3
	109	3
	115	31
	120	25
	127	5
	141	14
	142	14
	143	7
	145	28
	146	29
	152	10
OIL SEAL	173	32
OILSEAL/SD018243.5/T	155	4
ORIFICESETS/M6X2.0	75	18
O-RING	76	3
	77	3
O-RING/1A,G35	17	3
	18	3
O-RING/1A,G85	45	17
	46	17
O-RING/1A,P10	37	5
	37	11
	37	17
	121	33
	122	36
	130	16

Description	Fig.	Key
O-RING/1A,P10	131	16
	138	41
O-RING/1A,P15	17	8
	18	8
O-RING/1A,P28	174	21
	175	21
O-RING/1A,P30	66	2
O-RING/1A,P39	17	2
	18	2
	64	2
O-RING/1A,P8	23	12
	23	22
O-RING/1A,S15	32	20
O-RING/1B,P11	69	2
	75	17
	76	8
	76	10
	77	8
	77	10
	172	38
	173	28
O-RING/1B,P14	64	6
	75	6
	172	37
	173	27
O-RING/1B,P16	75	14
O-RING/1B,P18	64	4
	75	16
O-RING/1B,P6	75	7
O-RING/OR	148	19
	149	19
ORNAMENT/ARM/E16	168	15
ORNAMENT/DIESEL	163	3
	165	3
ORNAMENT/DX/SHIFT	14	4
	15	4
ORNAMENT/FUSE/7D	105	8
ORNAMENT/FUSE/MAIN/6	103	8-A
	104	7
	105	8-A
	106	7
ORNAMENT/FUSE/MAIN/G	103	8
ORNAMENT/FUSE/REAR	103	14
	105	14
ORNAMENT/FUSE/REAR/E	103	14-A

Description	Fig.	Key
ORNAMENT/FUSE/REAR/E	104	11
	105	14-A
	106	12
ORNAMENT/ISEKI	78	3
	162	5
	163	6
	164	5
	165	6
ORNAMENT/NAERAIL/1/E	164	20
	165	19
ORNAMENT/NAERAIL/2/E	164	21
	165	20
ORNAMENT/NP60	162	6
	163	7
	164	6
	165	7
ORNAMENT/STEERING	162	7
	162	7-A
	163	8
	163	8-A
	164	7
	165	8
ORNAMENT/TONGYANG/NP	162	4
	163	5
	164	4
	165	5
PACKING	4	29
	4	35
	12	8
	13	8
	148	26
	149	26
PACKING/90X105X9	45	14
	46	14
PACKING/CAPSULE/LOWE	135	8
	135	44
PACKING/CAPSULE/UPPE	135	24
	135	60
PACKING/HOPPER	177	15
	178	15
PACKING/ROHTO	137	4
PACKING/SHUTTER	177	28
	178	28
PALTE/GEAR	135	4
	135	40

Description	Fig.	Key
PANEL/DISCHARGE COMP	133	21
PANEL/HOOD/NP	99	7
	100	7
	101	7
	102	7
PANEL/MONITOR/NP/E16	99	1
	99	1-A
	100	1
	100	1-A
	101	1
	102	1
PARTITION/NP	3	45
	3	45-A
PEDAL/ACCELERATOR/D/	22	4
	22	4-A
PEDAL/ACCELERATOR/NP	21	5
	21	5-A
PEDAL/BRAKE/NP COMP	62	1
PEDAL/DIFFLOCK COMP	39	4
PIECE/FORK/PK	170	1
	171	1
	171	3
PIN	16	10
	19	20
	20	20
	54	5
	54	8
	57	66
	58	66
	62	13
	62	25
	85	8
	86	9
	89	6
	103	28
	104	19
	105	23
	106	23
	112	30
	126	7
	133	26
	135	95
	155	52
PIN STRAIGHT	52	3
	53	3
PIN(RORING)	128	7
PIN, TAPPING	150	7
	150	19
PIN,ARM PUSH-OUT	174	15
	175	15
PIN,COTTER/2.5X15/SU	145	7
	146	7
PIN,COTTER/2.5X20/SU	130	32
	130	46
	131	32
	131	45
	133	34
PIN,COUNTER,GEAR	148	8
	149	8
PIN,FLOAT	120	9
PIN,HAIR (10)	95	7
	126	8
	144	5
PIN,SEAT SET	95	6
PIN,SNAP/6	153	21
	157	5
PIN,SPLIT/2.5X15	38	3
	38	10
	62	13-A
	62	25-A
	112	29
	155	51
PIN,SPLIT/2.5X25	43	3
PIN,SPLIT/2.5X35	137	10-A
PIN,SPLIT/2X20	113	3
PIN,SPLIT/2X25	43	3-A
PIN,SPLIT/3X15	74	20
PIN,SPLIT/3X20	16	11
	16	27
	19	21
	20	21
	21	9
	22	8
	62	2
	62	8
	62	11
	62	23
	70	9
	71	9
	74	21
PIN,SPLIT/3X20	87	36
	87	46
	120	6
	120	19
	128	5
	147	5
PIN,SPLIT/3X25	90	13
	91	13
	92	10
	93	10
PIN,SPLIT/3X30	87	38
	87	48
PIN,SPLIT/3X30/SUS	114	10
	114	15
	114	15-A
	129	4
PIN,SPLIT/3X35	70	12
	71	12
	72	6
	73	6
PIN,SPLIT/3X40	61	7
	87	2
	88	2
	88	30
	89	13
PIN,SPLIT/4X25	38	5
	38	12
PIN,ST	172	49
	173	40
PIN,ST,A/6X16	121	4
	122	4
	138	6
PIN,ST,A/8X18	17	7
	18	7
	23	6
	23	19
	30	14
	31	14
	32	9
	45	2
	46	2
	57	3
	57	28
	57	64
	58	3

Alpabetical Index

Description	Fig.	Key
PIN,ST,A/8X18	58	28
	58	64
	59	3
	59	29
	59	56
	60	3
	60	29
	60	56
PIN,ST,B/3X8	174	13
	175	13
PIN,STAND	80	14
	81	14
PIN,TRIP-HOOK ROD	19	36
	19	36-A
	20	35
	20	35-A
PIN/+	177	7
	177	10
	178	7
	178	10
PIN/04X86	177	13
	178	13
PIN/06X36	54	4
	54	7
PIN/08X27	74	13
PIN/08X32	90	9
	91	9
	92	6
	93	6
PIN/08X41	16	29
PIN/08X47	74	13-A
PIN/10X113	144	4
PIN/10X30	130	39
PIN/10X36	131	38
	131	38-A
PIN/10X79 COMP	19	20-A
	20	20-A
PIN/12X100	90	11
	91	11
	92	8
	93	8
PIN/12X82	120	5
PIN/18X211	72	4
	73	4
PIN/18X247	70	10

Description	Fig.	Key
PIN/18X247	71	10
PIN/18X315 COMP	70	3
	71	3
	72	2
	73	2
PIN/18X83 COMP	65	3
PIN/2	57	65
	58	65
PIN/25	38	5-A
PIN/AZECLUTCH	138	48
	138	48-A
PIN/COTTER/2.5X35/SU	137	10
PIN/HAIR	128	2
	134	30
PIN/LOCK/CARRY COMP	87	44
PIN/LOCK/STAND	147	3
PIN/LOCKED	148	21
	149	21
PIN/PLANTING/CLUTCH	35	33
	35	33-A
	36	33
	36	33-A
PIN/ROLLER	87	26
	88	26
PIN/SNAP/08	12	2
	13	2
	21	7
	22	6
	80	15
	81	15
	89	7
	90	10
	91	10
	92	7
	93	7
PIN/STOPPER/8	16	30
	19	35
	19	35-A
	20	34
	20	34-A
	21	4
	22	3
	39	5
	44	6
	62	15

Description	Fig.	Key
PIN/STOPPER/8	74	14
	89	7-A
	120	10
	120	12
	129	6
	133	24
PIPE	4	31
	4	38
PIPE/AIRINTAKE/FD620	3	49
PIPING/PUMP/POWER ST	66	7
PISTON	173	6
PISTON/HMS1/021	172	9
PIVOT	94	8
PIVOT/DIAL	130	7
	131	7
PLANTINGARM/K/L ASSY	148	20
	148	20-A
	148	20-B
PLANTINGARM/K/R ASSY	149	20
	149	20-A
	149	20-B
PLANTINGSEAL	174	9
	175	9
PLATE	12	7
	13	7
	38	21
	150	8
	150	21
	153	15
PLATE,DISC	28	8
	29	8
PLATE,RUBBER/20X25X0	136	6
PLATE,SEPARATER	28	9
	29	9
PLATE/0.8	176	5
	179	5
PLATE/1.6	176	4
	179	4
PLATE/1R/13X280	150	31
PLATE/ADJUST COMP	130	1
PLATE/ADJUST/D COMP	131	1
PLATE/ADJUSTER/ COMP	20	31
PLATE/ADJUSTER/HST	19	31
	19	31-A
	20	31-A

Description	Fig.	Key
PLATE/ARM/ROTOR	115	29
PLATE/CABLE COMP	113	12
PLATE/CABLE/HOLDER	57	62
	57	62-A
	58	62
	58	62-A
	59	59
	59	59-A
	60	59
	60	59-A
PLATE/CAPSULE	135	28
	135	64
PLATE/CAUTION	4	34
	4	39
PLATE/CENTER/FLOAT	126	2
	126	2-A
PLATE/CLUTCH/LH COMP	155	30
PLATE/CLUTCH/RH COMP	155	31
PLATE/COUNTER/BRAKE/	62	20
PLATE/COUNTER/CHANGE	16	24
PLATE/COVER/GEAR	87	16
	88	16
PLATE/COVER/GEAR/S	87	18
	88	18
PLATE/COVER/ROCK/PQZ	85	9
	86	10
PLATE/FLANGE/HST	14	12
	15	12
PLATE/FOUR BRAKE HOL	28	12
	29	12
PLATE/GUIDE/DEPTH	141	12
	142	12
PLATE/GUIDE/E16 COMP	152	15
PLATE/GUIDE/PICKING	141	13
	142	13
PLATE/HOLDER	129	2
PLATE/HOLDER/DEPTH	125	2
PLATE/HOLDER/PLANTIN	143	2
PLATE/HOLDER/ROTOR	115	21
	115	21-A
PLATE/HOOK/SEEDLING	150	24
PLATE/I/14X40	133	16
PLATE/I/19X20	89	9
PLATE/I/24X64	115	20
	115	20-A
PLATE/I/24X64	121	8
	121	8-A
	122	8
	122	8-A
	123	7
	123	7-A
	124	6
	124	6-A
	138	4
	138	4-A
	141	4
	141	4-A
	142	4
PLATE/INDICATOR	121	57
	122	60
PLATE/IR/13X211	135	93
PLATE/IR/16X211	135	93-A
PLATE/IR/16X277	135	94
	135	94-A
PLATE/L/12X30	153	13
	154	1
PLATE/LID	123	11
	123	11-A
PLATE/LINK/SENSOR	120	7
	120	7-A
PLATE/LOCK/COVER/ENG	85	13
	86	14
PLATE/MAGNET/NP	78	5
PLATE/OUTER COMP	112	19
PLATE/PLANTING CLUTC	35	31
	36	31
PLATE/POTENTIOMETER/	19	7
	20	7
PLATE/ROD	62	14
PLATE/ROLLING COMP	128	6
PLATE/RUBBER/30X50X0	3	31
PLATE/SEAT/PZ/8	95	4
PLATE/SEEDLING FEED	150	33
PLATE/SEEDLINGTANK	153	11
PLATE/SENSOR/FLOAT	120	16
	120	16-A
PLATE/SHUTTERCOVER	177	29
	177	29-A
	178	29
PLATE/SLIDER	152	4
PLATE/SLIDER/HOOK	152	3
PLATE/SOIL COVERING/	137	23
	137	23-A
	137	24
	137	25
	137	25-A
	137	26
PLATE/SPACER/COVER	86	7
PLATE/SPRING	172	25
	173	43
PLATE/STAY/COCK	3	39-A
PLATE/STAY/STEP/FRON	80	19
	81	19
PLATE/STEP/CENTER	80	20
	81	20
PLATE/STOPPER/TANK/8	152	11
PLATE/SUPPORT/STEP	84	8
PLATE/SWASH	173	4
PLATE/SWASH/HMS1/021	172	11
PLATE/SWITCH/E16/NP	99	38
	99	38-A
	100	39
	100	39-A
	101	39
	102	39
PLATE/VALVE/MOTOR	172	14
	173	9
PLATE/VALVE/PUMP	172	13
	173	8
PLATE/WINKER/LH	151	6
PLATE/WINKER/RH	151	7
PLATE/Z/24X40	130	29
	131	29
PLATESPLINE1.6	176	12
	179	12
PLUG	121	5
	122	5
	123	13
	138	31
PLUG(G3/8)	172	35
	173	25
PLUG(PF1/4)	172	36
	173	26
PLUG,CAP/62X6	138	2
PLUG,OIL	57	6

Alpabetical Index

Description	Fig.	Key
PLUG,OIL	58	6
	59	6
	60	6
PLUG/25X08	59	36
	60	36
PLUG/47	35	11
	36	11
	59	37
	60	37
	138	18
PLUG/BOA/42	116	5
	116	27
PLUG/SCREW/SEAL	23	10
	23	13
	45	32
	46	27
	57	7
	58	7
	59	7
	60	7
	75	9
	75	15
	172	39
POPPET(CHECK/1.6)	173	23
POPPET/CHECK	172	32
	173	22
POPPET/CHECK/1.6	172	33
POPPET/RELIEF	172	31
	173	21
PRESSURECAP	4	4
PULLEY,TENSION	7	6
	9	6
PULLEY,TENSION/70BS	10	9
PULLEY/VB115	9	1
PULLEY/VB115/VA106	7	1
PULLEY/VB133/G	17	9
PULLEY/VC125	18	9
PULLEY/VC140	8	1
PUMP/FUEL ASSY	12	19
	12	19-A
	13	13
	13	13-A
PUMP/OILSET	140	2
PUMP/PZ	64	1
PUSHINGOUTNUT/E	174	11
PUSHINGOUTNUT/E	175	11
PUSHNUT/08/SUS	135	90-A
RADIATOR ASSY	4	1
RADIATOR/G ASSY	3	21
RADIATOR/SUB ASSY	4	2
RAIL/LOWER/6E COMP	150	5
RAIL/PLANTING/6	119	1
RAIL/SEEDLING TANK U	150	11
RAIL/SEEDLING TANK/I	150	17
RAIL/TANK/NP6/E16	152	1
RAKE/CENTER	129	7
RAKE/CENTER COMP	129	1
REGULATOR/Z ASSY	5	15
RELAY ASSY	103	13
	103	25
	104	10
	104	22
	105	13
	105	26
	106	11
	106	21
RELAY,TWIN	103	12
	103	12-A
	104	9
	105	12
	105	12-A
	106	10
RELAY/4P ASSY	103	26
	104	23
	105	27
	106	22
RELAY/FLASHER ASSY	99	46
	100	47
	101	47
	102	47
RELAY/TWIN	103	12-B
	104	9-A
	105	12-B
	106	10-A
REMAINDER/SHOOT COMP	133	20
RESERVETANK	4	26-A
RETAINING RING/E TYP	155	24
RING, SNAP	38	6
	130	57
	131	56
RING, SNAP	135	21
	135	31
	135	57
	135	67
	135	82
	177	14
	178	14
RING,SNAP/12 C	112	8
	115	37
	138	50
	145	16
	146	16
RING,SNAP/14 C	32	10
RING,SNAP/15 C	7	7
	9	7
	10	10
	62	23-A
	74	8
	87	6
	88	6
	112	12
	115	11
RING,SNAP/17 C	19	28
	20	28
	116	12
	116	22
	116	32
	116	39
	122	16
	172	48
	173	39
RING,SNAP/18 C	121	28
	122	31
RING,SNAP/20 C	30	12
	31	12
	57	40
	58	40
	121	12
	122	13
	138	9
	138	12
	138	15
	172	18
	172	22
	173	29

Description	Fig.	Key
RING, SNAP/22 C	33	9
	34	9
RING, SNAP/25 C	57	11
	57	43
	58	11
	58	43
	59	11
	59	32
	59	40
	60	11
	60	32
	60	40
	130	54
	131	53
	147	7
RING, SNAP/28 C	57	15
	58	15
	59	15
	60	15
	87	30
RING, SNAP/30 C	172	41
	173	38
RING, SNAP/32 C	52	2
	53	2
	173	31
RING, SNAP/35 C	115	26
	138	23
RING, SNAP/40 C	42	4
	56	3
	116	11
	116	17
	116	23
	116	35
	116	38
RING, SNAP/47 C	35	10
	36	10
	54	11
	55	9
	57	39
	58	39
	59	38
	60	38
	121	11
	122	12
	138	16

Description	Fig.	Key
RING, SNAP/47 C	172	40
	173	30
RING, SNAP/52 C	35	23
	36	23
	45	6
	46	6
	57	10
	58	10
	59	10
	60	10
RING, SNAP/8 E	112	17
RING, SNAP/R55	18	20
	121	18
	122	21
RING, SNAP/R62	35	24
	36	24
	42	12
	57	34
	58	34
	59	34
	60	34
	115	27
RING, SNAP/R72	30	3
	31	3
	45	30
	46	24
RING, SNAP/R85	45	11
	46	11
RING, SNAP/S45	45	10
	46	10
RING, STOP/30	45	44
	46	40
RING/O	23	8-A
RING/SNAP	155	5
	172	8
RIVET	97	10
	134	37
RIVET, BLIND/4X8.6	78	6
RIVET, POP	150	6
RIVET/BLIND/0	177	11
	177	37
	178	11
RIVET/BLIND/STEEL/3.	80	3
	81	3
ROD, ADJUST/90	10	12

Description	Fig.	Key
ROD/221	134	12
ROD/ANGLE	120	18
	120	18-A
ROD/BRAKE/LOWER/NP	62	24
ROD/BRAKE/UPPER/NP	62	12
ROD/CHANGE/LOWER/NP	16	26
ROD/CHANGE/NP COMP	16	17
ROD/CLUTCH COMP	44	4
ROD/CLUTCH/ROTOR	113	4
ROD/COUNTER/DISCHARG	133	30
ROD/DIALADJUST	130	9
	131	9
ROD/DISCHARGE	133	25
ROD/DRIVE/NP COMP	130	59
	131	58
ROD/FLOAT	120	24
	120	24-A
ROD/HST/NP COMP	19	11
	20	11
ROD/LAKE COMP	129	5
ROD/LINK	120	11
	120	11-A
ROD/M8X195	127	3
ROD/MARKER/WATER WHE	145	3
	146	3
ROD/PLANTING	38	2
	38	9
ROD/PLANTING CLUTCH/	74	16
ROD/SHUTTER	133	18
ROD/TIECOMP	43	1
ROHTO	137	3
ROLL	135	15
	135	51
ROLL/FERTILIZE ASSY	135	10-A
	135	46-A
ROLLER	70	8
	71	8
ROLLER(ROTARY)	114	8
ROLLER, SEEDLING TANK	141	8
	142	8
ROLLER, SEEDLING, UPPE	155	26
ROLLER/08X14X17	70	8-A
	71	8-A
ROLLER/SEEDLING	155	22
ROLLER/SEEDLINNG	155	21

Alpabetical Index

2232-097-100-20

Description	Fig.	Key
ROLLER44	87	25
	88	25
ROLLERCLUTCH/HF1816	155	3
ROTARY PLANTING/K/LH	148	1
	148	1-A
	148	1-B
	148	1-C
ROTARY PLANTING/K/RH	149	1-A
	149	1-B
	149	1-C
ROTARYPLANTING/K/RH	149	1
ROTOR/36/M	114	4
	114	14
ROTOR/72/M	114	3
	114	13
RUBBERBAND	134	40
RUBBERBOARD/20X20X12	87	43
SAFETY CLUTCH/NP/CEN	138	10
SAFETY CLUTCH/NP/LH	138	7
SAFETY CLUTCH/NP/RH	138	13
SCREW,FLAT/M6X20	152	16
SCREW,SEMS/M5X12	3	43-A
SCREW,SEMS/M5X16	30	17
	31	18
SCREW,SET/M6X12	130	50
	131	49
SCREW,SOCKET/M10X35	172	50
	173	41
SCREW,SOCKET/M8X25	75	20
SCREW,SP/M4X10	14	20
	15	20
	19	6
	20	6
	42	19
	72	9
	73	9
	74	10
	112	23
	115	13
	120	15
	128	15
	145	24
	146	24
SCREW,SP/M4X12	150	30
SCREW,SP/M4X8	150	29
SCREW,SP/M5X12	3	43
SCREW,SP/M5X16	87	20
	88	20
	115	5-A
	128	10-A
SCREW,SP/M5X25	99	44
	100	45
	101	45
	102	45
SCREW,SP/M6X12	14	3
	15	3
SCREW,SP/M6X16	79	2
	87	14
	88	14
	99	29
	100	30
	101	30
	102	30
SCREW,SP/M6X25	148	4
	149	4
SCREW,SP/M6X30	174	5
	175	5
SCREW,SP/M8X20	129	8
SCREW,TAPPING	132	5
SCREW,TAPPING/M3	134	3
SCREW/04	130	21
	131	21
SCREW/6	137	22
SCREW/M3X	134	22
SCREW/M3X12	177	11-A
	177	37-A
	178	37
SCREW/M3X16	14	31
	15	31
	16	14
	38	18
	132	11
	133	40
	157	9
SCREW/M3X20	38	18-A
	121	32
	122	35
SCREW/M3X6	177	30
	178	30
SCREW/M4X10	135	5
SCREW/M4X10	135	41
SCREW/M4X12	177	40
	178	40
SCREW/M5X10	130	17
	131	17
	134	8
SCREW/M6X16	136	5
SCREW/SET	139	3
SCREW/TAPPING	95	3
	98	8
	135	5-A
	135	30-A
	135	41-A
	135	66-A
	150	28
	150	32
	177	35
	178	35
SCREW/TAPPING/6X16	99	28
	100	29
	101	29
	102	29
SCREW/TAPPING/M4X12	135	30
	135	66
SCREW/TRUSS/M8X40	78	4
SEAL,OIL	121	40
	122	43
	138	51
	148	7
	148	15
	149	7
	149	15
	174	6
	175	6
SEAL,OIL 305514	45	47
	46	43
SEAL,OIL/SC17306	138	37
SEAL,OIL/SDD7/204	57	30
	57	41
	58	30
	58	41
	59	31
	60	31
SEAL,OIL/TC12227	35	34
	36	34

Description	Fig.	Key
SEAL, OIL/TC12227	37	2
	37	9
	37	15
	42	15
	121	30
	122	33
SEAL, OIL/TC12257	57	44
	58	44
	59	41
	60	41
SEAL, OIL/TC15307	135	18
	135	54
SEAL, OIL/TC17307	121	39
	122	42
SEAL, OIL/TC17357	57	25
	58	25
	59	26
	60	26
	138	24
SEAL, OIL/TC17408	56	4
SEAL, OIL/TC20307	135	12
	135	48
SEAL, OIL/TC20407	33	3
	34	3
SEAL, OIL/TC20477	30	13
	31	13
	121	13
	122	14
	138	17
	172	44
	173	34
SEAL, OIL/TC25357	28	15
	29	15
	35	30
	36	30
	39	2
	130	55
	131	54
SEAL, OIL/TC25457	121	51
	122	54
SEAL, OIL/TC25478	30	9
	31	9
SEAL, OIL/TC255210	45	7
	46	7
SEAL, WHEEL SHAFT	57	56
SEAL, WHEEL SHAFT	58	56
	59	52
	60	52
SEAL/47	172	45
	173	35
SEAL/DUST/92X104X8	45	15
	46	15
SEAL/OIL	35	25
	36	25
	42	13
	57	35
	58	35
	59	35
	60	35
	115	28
	116	13
	116	18
	116	20
	116	33
	116	40
	172	42
	172	43
	173	33
SEAT/NP ASSY	95	1
SEEDLING FRAME/BASE/	87	1
	88	1
SEEDLING FRAME/E16/L	89	1
SEEDLING FRAME/E16/R	89	2
SEEDLING FRAME/RH/NP	87	29
	88	29
SEEDLING FRAME/SLIDE	87	3
	87	4
	87	5
	88	3
	88	4
	88	5
SEEDLINGFRAME/SLIDER	87	23
	88	23
SEEDLINGTANK	150	2
SEEDLINGTANK/6E COMP	150	1
SEEDLINGTANK/EXTEND	156	1
SENSOR ARM/LEVER/HST	15	21
SENSOR, HOPPPER	132	10
SENSOR/ANGLE/110/R	14	19
	15	19
SENSOR/ANGLE/110/R	72	8
	73	8
	120	14
	128	14
	145	23
	146	23
SENSOR/ANGLE/330	42	16
	112	21
SENSOR/ANGLE/75 ASSY	19	5
	20	5
	74	9
	115	12
SENSOR/CLOGGED/NP	132	7
SENSOR/SLOPE ASSY	121	53
	122	56
SENSOR/SPEED/GEAR	30	16
	31	17
SENSOR/STOP SWITCH	150	12
SENSORARM/HST/NP	19	9
	19	9-A
	20	9
	20	9-A
SENSORARM/HSTLEVER	14	21
SENSORARM/LINK	72	10
	72	10-A
	73	10
	73	10-A
SENSORARM/ROLLING	128	16
SHAFT	155	25
SHAFT/6/K	153	19
SHAFT/CENTER ROTOR/D	116	6
	116	28
SHAFT/CHANGE	28	1
	29	1
	35	1
	36	1
SHAFT/CHANGE/SUB	33	4
	34	4
SHAFT/COUNTER COMP	26	1
	130	33
	131	33
SHAFT/COUNTER/41-10	57	50
	59	46
SHAFT/COUNTER/41-9	58	50
	60	46

Alpabetical Index

2232-097-100-20

Description	Fig.	Key
SHAFT/COUNTER/8 COMP	27	1
SHAFT/COUNTER/SEND	121	37
	122	40
SHAFT/DIFF	32	3
	32	3-A
SHAFT/DIFFLOCK/NP	39	1
SHAFT/DISCHARGE	135	33
	135	33-A
	135	69
	135	69-A
SHAFT/DISCHARGE/6	133	31
SHAFT/DRIVE/6	139	2
	139	2-A
SHAFT/DRIVEN	35	8
	36	8
SHAFT/FERTILIZE	57	37
	58	37
SHAFT/FERTILIZE/6LH	135	76
SHAFT/FERTILIZE/6RH	135	75
SHAFT/FORK/PLANTING/	174	25
	175	25
SHAFT/FOUR WHEEL BRA	28	14
	29	14
SHAFT/FRONTDRIVE/LH	32	13
SHAFT/FRONTDRIVE/RH	32	19
SHAFT/FRONTWHEEL	45	42
	46	38
SHAFT/INPUT COMP	24	1
SHAFT/INPUT/8D COMP	25	1
SHAFT/JOINT/PLANT	54	2
SHAFT/KINGPIN	45	33
SHAFT/KINGPIN/8	46	28
SHAFT/MOTOR	173	11
SHAFT/MOTOR/021 SET	172	19
SHAFT/MOTOR/HMS1/021	172	20
SHAFT/OUTPUT/ROTOR	57	22
	58	22
	59	23
	60	23
SHAFT/PLANT/FRONT/12	54	1
	55	1
SHAFT/PLANT/G COMP	55	2
SHAFT/PLANT/OUT	35	20
	36	20
SHAFT/PLANT/REA COMP	54	6
SHAFT/PLANT/REAR/G	55	5
SHAFT/PLANTING ARM/L	148	10
SHAFT/PLANTING ARM/R	149	10
SHAFT/PLANTING/IN	121	9
SHAFT/PLANTING/IN/G	122	10
SHAFT/PLANTINGARM	138	32
SHAFT/PUMP	173	10
SHAFT/PUMP/021 SET	172	15
SHAFT/PUMP/HMS1/021	172	16
SHAFT/REAR/WHEEL/6	57	53
	57	53-A
	57	53-B
	59	49
	59	49-A
SHAFT/REAR/WHEEL/8	58	53
	58	53-A
	60	49
	60	49-A
SHAFT/REARCLUTCH/N	30	7
	31	7
SHAFT/RIDGE CLUTCH/C	112	5
SHAFT/ROLLER CLUTCH/	155	2
SHAFT/ROTOR/6	114	11
SHAFT/ROTOR/6/CENTER	114	1
SHAFT/ROTOR/FRONT	116	9
	116	31
SHAFT/ROTOR/FRONT/8	113	6
SHAFT/ROTOR/REAR/LH	116	14
SHAFT/ROTOR/REAR/NP	113	5
SHAFT/ROTOR/REAR/RH	116	36
SHAFT/SEEDLINGFEED/2	155	17
SHAFT/SEEDLINGFEED/6	155	16
SHAFT/SENCER/STEERIN	42	14
SHAFT/SEND	121	15
	122	18
SHAFT/STEARING/OUT	42	9
SHAFT/STEERING/IN	42	1
SHAFT/STEERING/NP	61	6
	61	6-A
SHEET/HOPPER/6	177	5
	178	5
	178	5-A
SHEET/HOPPER/6/LOWER	177	22
	178	22
SHEET/HOPPER/6/REAR	177	25
SHEET/HOPPER/6/REAR	178	25
SHFTER/CHANGE/DRIVE	37	1
SHIFTER/CHANGE/NP	16	28
SHIFTER/CLUTCH/REVER	35	29
	36	29
SHIFTER/FERTILIZER	57	42
	58	42
	59	39
	60	39
SHIFTER/PLANTING/MEI	37	8
SHIFTER/PLANTING/SUB	37	14
SHIFTER/SEND COMP	121	29
	122	32
SHIFTER/SEND/3 COMP	121	29-A
	122	32-A
SHIM,NEEDLE SHAFT	19	30
	20	30
SHIM,PLANTING A/0.1	120	3
SHIM,SAFETY CLUTCH	121	42
	122	45
SHIM/1.0	172	10
SHIM/1.8	173	7
SHIM/35X47X0.2	121	14
	122	15
SHIM/MUFFLER	2	21
	2	22
SHROUD/FD620/E18	3	34
	3	34-A
SHROUDFAN ASSY	4	6
SHUTTER	177	27
	177	27-A
	177	27-B
	178	27
	178	27-A
SHUTTER/DISCHARGE	135	34
	135	34-A
	135	70
	135	70-A
SIFTER/CLUTCH	56	1
SIFTER/CLUTCH/G	56	1-A
SIM/8X16X0.3	130	40
	131	39
SLIDER PLATE(E12)	150	15
SNAPRING	115	16
	124	2

Description	Fig.	Key
SNAPRING	130	8
	130	10
	131	8
	131	10
SNAPRING/HOLE	176	7
	179	7
SNAPRING/SHAFT	176	8
	179	8
SOCKET	98	3
SORING	99	17
	100	17
	101	18
	102	18
SPAC/M8	94	6
	99	4-A
	100	4-A
	101	4
	102	4
SPACER/OUTER/RH	153	5
SPACER/SENSOR/ANGLE	42	17
	112	22
SPLINEBOSS	176	2
	179	2
SPRING	90	12
	91	12
	92	9
	93	9
	97	3
	130	20
	130	20-A
	131	20
	131	20-A
	135	103
	138	21
	176	3
	179	3
SPRING, BELT/4	155	29
SPRING, BELT/8	155	28
SPRING, HC030	147	4
SPRING, HE071	19	39
	20	38
	21	8
	22	7
SPRING, TENSION	89	8
SPRING/8	99	4
SPRING/8	100	4
SPRING/BRUSH/FG	134	27
SPRING/HC015	138	49
SPRING/HC017	69	4
SPRING/HC021	121	35
	122	38
	172	30
	173	20
SPRING/HC024	172	6
SPRING/HC028	35	28
	36	28
SPRING/HC029	145	6
	146	6
SPRING/HC030	172	29
	173	19
SPRING/HC032	74	19
SPRING/HC033	57	13
	58	13
	59	13
	60	13
SPRING/HC034	155	44
SPRING/HC037	148	17
	149	17
SPRING/HC041	32	17
SPRING/HC042	19	26
	20	26
SPRING/HC044	135	80
SPRING/HC050	21	2
	87	45
SPRING/HC051	172	7
SPRING/HC053	45	34
	46	29
	173	18
SPRING/HC058	62	16
SPRING/HC086	174	14
	175	14
SPRING/HC093	135	79
SPRING/HC100	37	3
SPRING/HC128	135	81
SPRING/HE060	112	27
SPRING/HE070	62	19
SPRING/HE079	133	11
SPRING/HE089	10	11
SPRING/HE104	155	7
SPRING/HE110	7	9
SPRING/HE110	9	9
SPRING/HE114	74	15
	74	15-A
SPRING/HE232	127	1
SPRING/HE240	115	40
SPRING/HE385	127	2
SPRING/HT012	62	10
	87	35
SPRING/HT013	138	45
	138	45-A
	138	45-B
SPRING/HT015	57	49
	57	49-A
	58	49
	58	49-A
	59	45
	60	45
SPRING/HT016	138	45-C
SPRING/HT017/S	144	6
SPRING/HT018	120	13
	120	13-A
SPRING/HT019/LH/Z	135	35
SPRING/HT019/RH/Z	135	71
SPRING/HT020	85	10
SPRING/HT020/LH	145	17
	145	17-A
	146	17
SPRING/HT020/RH	145	18
	145	18-A
	146	18
SPRING/HT025/CHANGE	16	3
SPRING/HT025/HST	14	5
	15	5
SPRING/HT22	86	11
SPRING/MARKER/REAR/L	145	9
	146	9
SPRING/MARKER/REAR/R	145	10
	146	10
SPRING/SEND/PZ8	121	27
	122	30
SPRING/SHIFTER/P	37	6
	37	12
	37	18
SPRING/STOPSWITCH	157	6
SPROCKET/12/DRIVE	57	19

Alpabetical Index

Description	Fig.	Key
SPROCKET/12/DRIVE	58	19
	59	20
	60	20
SPROCKET/12/DRIVEN	57	21
	58	21
	59	22
	60	22
SPROCKET/18	138	33
SPROCKET/CLUTCH	138	19
STAY	11	1
STAY,6/M COMP	153	1
STAY/AIRCHAMBER COMP	133	7
STAY/AIRCLEANER COMP	4	18
	4	18-A
STAY/ANGLE	120	1
	120	1-A
STAY/AZECLUTCH COMP	138	42
	138	42-A
	138	42-B
	138	42-C
	138	42-D
	138	43
	138	43-A
STAY/BLOWER COMP	134	28
	134	28-A
STAY/CENTERFLOA COMP	126	4
	126	4-A
	126	5
	126	5-A
STAY/DUCT GUARD/6/LH	133	43
STAY/DUCT GUARD/6/RH	133	44
STAY/DUCT/REAR COMP	134	14
STAY/DUCT/REAR/LH	134	15
STAY/DUCT/REAR/RH	134	17
STAY/FLOAT/CENTER	120	4
	120	4-A
STAY/FLOAT/SIDE COMP	144	2
	144	2-A
STAY/FRONTAXLE	45	20
STAY/FUSEBOX COMP	103	22
	106	18
STAY/HANDLING/R COMP	90	4
STAY/HINGE/PZ	85	5
	86	5
STAY/HOPPER COMP	136	2
STAY/LEVER COMP	38	13
	38	13-A
STAY/MIRROR/K	94	2
STAY/RADIATOR/L COMP	4	8
STAY/RADIATOR/R COMP	4	9
STAY/RADIATOR/UPPER/	3	24
	3	25
STAY/RAIL COMP	152	2
STAY/ROTOR	115	18
STAY/ROTOR/CENTER	114	6
STAY/SEEDLING FRAME/	91	4
	92	1
	92	1-A
	92	2
	92	2-A
	92	11
	93	1
	93	1-A
	93	2
	93	2-A
	93	2-B
	93	11
STAY/SEEDLING TANK/C	141	3
	142	3
STAY/SEEDLING TANK/L	141	1
	142	1
STAY/SEEDLING TANK/R	141	2
	142	2
STAY/SENSOR/SLOPE	121	55
	121	55-A
	122	58
	122	58-A
STAY/SENSOR/STEERING	42	20
STAY/SLIDER/LH/NP	90	1
	91	1
STAY/SLIDER/OUTER	152	6
STAY/STOPSWITCH COMP	157	1
STAY/SWITCH COMP	132	21
STAY/SWIVEL SEEDLING	89	5
STAY/TANK COMP	140	1
STEERING/NP ASSY	61	10
STEP/ASSIST/NP COMP	82	1
STEP/CENTER/LH/D/NP	81	7
STEP/CENTER/LH/NP	80	7
STEP/CENTER/RH/D/NP	81	10
STEP/CENTER/RH/NP	80	10
STEP/FRONT/NP	80	1
	81	1
STEP/REAR/NP	83	1
	84	1
STEP/SEETHROUGH/NP	80	8
	80	11
	81	8
	81	11
STOPPER,SEED/6/K	153	3
STOPPER/LAMP/HOOD/LH	98	6
STOPPER/LAMP/HOOD/RH	98	7
STOPPER/ROLLING/6V	118	1
STOPPER/SEEDLING FEE	155	13
	155	13-A
STUD/M12X25/7T	47	4
	48	4
SUTTER	133	5
SUTTERCHANGE	133	4
SWITCH ASSY	150	27
SWITCH ASSY	14	29
	15	29
	16	12
	38	16
	133	38
	157	7
SWITCH,PUSH	132	16
SWITCH,SAFETY ASSY	99	33
	100	34
	101	34
	102	34
SWITCH,STARTER	100	21
	101	22
SWITCH/COMBINATION	99	32-A
	100	33-A
	101	33
	102	33
SWITCH/CONTROLLER/E1	99	11
	100	11
	101	11
	102	11
SWITCH/CONTROLLER/NP	99	12
	100	12
	101	12
	102	12

Description	Fig.	Key
SWITCH/MAIN ASSY	99	21
	102	22
SWITCH/MOMENTARY/G/W	99	14
	100	14
	101	15
	102	15
SWITCH/POWER TRAIN S	101	14
	102	14
SWITCH/VR ASSY	99	15
	100	15
	101	16
	102	16
SWITCH/VR/NP ASSY	99	24
	100	25
	101	25
	102	25
SWITVH/COMBI	99	32
	100	33
TANK, RESERVE	4	26
TANK/FUEL/NP	12	1
	13	1
TAPBOLT/6X20	49	2
	80	9
	80	12
	81	9
	81	12
TAPPINGSCREW/M5X12	19	24
	20	24
	74	5
TAPPINGSCREW/M5X16	112	4
	145	21
	146	21
THRUSTCOLLAR	176	9
	179	9
TIGHTNER/SUPPORT FRA	138	27
TIRE/FRONT/650 COMP	47	1
TIRE/FRONT/650/ COMP	48	1
TORQUEGENERATOR	76	1
	77	1
TUBE/100	115	7
	128	12
TUBE/18X24	56	8
TUBE/25X37X480	12	17
TUBE/DISCHARGE/6	133	1
TUBE/HOSE/6	137	9

Description	Fig.	Key
TUBE/MARKER/6L COMP	145	1
	146	1
TUBE/MARKER/6R COMP	145	2
	146	2
TUBE/MIRROR/K COMP	94	1
TUBE/ROLLER	114	9
TUBE/SEEDLING FRAME/	92	17
	93	17
TUBE/SEEDLING PICKIN	143	1
UNUT/M8/CAP	99	6
	100	6
	101	6
	102	6
VALVE	4	22
VALVE/KTMS6/8 SET	75	1
	75	1-A
VALVE/PFV/15ASSY	75	2
VALVE/RELIEF/08 ASSY	75	13
WASHER	2	20
	5	12
	7	8
	9	8
	10	6
	40	5
	41	5
	74	7
	74	17
	115	10
	115	15
	115	36
	117	8
WASHER, PL/M10	2	5
	5	9
	6	4
	45	25
	92	16
	93	16
	117	4
	123	18
	128	4
	130	31
	130	43
	130	45
	131	31
	131	42

Description	Fig.	Key
WASHER, PL/M10	131	44
WASHER, PL/M12	2	10
	133	35
	155	23
WASHER, PL/M14	14	17
	15	17
WASHER, PL/M16	19	27
	20	27
WASHER, PL/M18	70	11
	71	11
	72	5
	73	5
WASHER, PL/M3	14	33
	15	33
	16	16
	38	20
	132	12
	133	42
	157	10
	177	12
	177	12-A
	177	32
	177	39
	177	39-A
	178	12
	178	32
	178	39
WASHER, PL/M4	38	7
	78	7
	130	23
	131	23
	150	9
	150	20
	177	8
	177	16
	177	41
	178	8
	178	16
	178	41
WASHER, PL/M5	134	10
WASHER, PL/M6	54	14
	55	12
	57	72
	58	72
	70	6

Alpabetical Index

2232-097-100-20

Description	Fig.	Key
WASHER, PL/M6	71	6
	112	31
	113	10
	133	49
	135	96
	153	20
	157	4
WASHER, PL/M8	14	6
	15	6
	16	4
	17	19
	19	3
	19	37
	19	37-A
	20	3
	20	36
	20	36-A
	21	6
	22	5
	44	5
	62	5
	70	7
	71	7
	94	4
	97	6
	99	3
	100	3
	101	3
	102	3
	113	2
	130	5
	131	5
	135	105
	137	20
	147	6
	155	50
WASHER, PULLEY	148	27
	149	27
WASHER, SP/M10	2	4
	5	2
	5	8
	6	5
	8	7
	10	3
	11	2
WASHER, SP/M10	17	6
	17	12
	18	6
	18	12
	43	4
	45	19
	45	24
	46	19
	57	61
	58	61
	59	58
	60	58
	92	15
	93	15
	117	7
	123	19
WASHER, SP/M12	2	9
	47	3
	48	3
	57	58
	58	58
	59	54
	60	54
	76	6
	77	6
WASHER, SP/M3	14	32
	15	32
	16	15
	38	19
	132	13
	133	41
	134	4
	157	11
	177	31
	177	33
	177	44
	178	31
	178	33
WASHER, SP/M4	130	22
	131	22
	135	6
	135	29
	135	42
	135	65
	177	17
WASHER, SP/M4	177	42
	178	17
	178	42
WASHER, SP/M5	115	6
	128	11
	130	18
	131	18
	132	9
	134	9
WASHER, SP/M6	2	17
	3	3
	3	11
	72	12
	73	12
	128	18
	133	48
	136	4
WASHER, SP/M8	2	14
	5	5
	5	11
	10	8
	16	23
	17	18
	18	16
	19	17
	20	17
	23	5
	23	18
	32	5
	44	3
	75	21
	118	3
	130	4
	130	34
	130	41
	130	63
	131	4
	131	34
	131	40
	131	62
	132	18
	137	19
	148	23
	148	28
	149	23

Description	Fig.	Key
WASHER,SP/M8	149	28
	151	3
WASHER,STAND SPRING	61	8
WASHER,TENSION	56	6
	138	5
WASHER,WIRE TENSION	2	18
	3	12
	57	47
	58	47
	59	43
	60	43
	62	17
	137	32
	138	46
	145	5
	146	5
	155	40
WASHER/05X16X01	130	19
	131	19
WASHER/07X16X03	157	2
WASHER/07X18X1.5	136	3
WASHER/09X11X1.6	69	3
WASHER/09X18X03	148	22
	149	22
WASHER/09X22X02	112	28
WASHER/09X30X4.5	45	36
	46	31
WASHER/11X24X3	17	11
WASHER/11X38X06/G	117	8-A
WASHER/11X46X06	7	3
	8	8
	9	3
WASHER/12X30X01	155	6
WASHER/13X30X01	135	83
WASHER/15X23X01	112	11
WASHER/15X40X05	67	3
	68	3
WASHER/16X25X0.4	135	19
	135	27
	135	55
	135	63
WASHER/16X25X1.0	135	19-A
	135	55-A
WASHER/16X46X5	45	38
	46	33
WASHER/18X34X02	32	18
WASHER/18X45X1	135	16
	135	25
	135	52
	135	61
WASHER/19X24X2	172	5
WASHER/20X28X01	57	36
	58	36
WASHER/21X32X03	61	8-A
WASHER/21X45X01	135	14
	135	23
	135	50
	135	59
WASHER/25X30X1	173	42
WASHER/25X35X01	130	53
	131	52
WASHER/27X36X1	57	12
	58	12
	59	12
	60	12
WASHER/M12X20X01	112	7
	130	11
	131	11
	135	83-A
WASHER/M18	174	27
	175	27
WEIGHT/FERTILIZER HO	137	8
WHEEL/950/LH COMP	40	1
WHEEL/950/RH COMP	40	2
WHEEL/THICK RIM/900/	41	1
	41	1-A
	41	2
	41	2-A
WIRE BAND(92)	78	9
	115	8
	128	13
WIRE,LEAD	104	21
	105	25
WIRE,SEEDING GUIDE/P	152	18
WRENCH,PLUG	170	2